INTERNATIONAL STANDARD

ISO 9908

First edition
1993-11-01

Technical specifications for centrifugal pumps — Class III

Spécifications techniques pour pompes centrifuges — Classe III

Reference number
ISO 9908:1993(E)

Copyright International Organization for Standardization

Contents

Page

1 Scope 1

2 Normative references 1

3 Definitions 2

4 Design 2

5 Materials 7

6 Shop inspection and tests 7

7 Preparation for dispatch 7

Annexes

A Centrifugal pump — Data sheet 9

B Enquiry, proposal, purchase order 14

C Documentation 15

D Examples of seal arrangements 16

E Piping arrangements for seals 18

F Check list 21

G Bibliography 22

© ISO 1993
All rights reserved. No part of this publication may be reproduced or utilized in any form or by any means, electronic or mechanical, including photocopying and microfilm, without permission in writing from the publisher.

International Organization for Standardization
Case Postale 56 • CH-1211 Genève 20 • Switzerland

Printed in Switzerland

Copyright International Organization for Standardization

Foreword

ISO (the International Organization for Standardization) is a worldwide federation of national standards bodies (ISO member bodies). The work of preparing International Standards is normally carried out through ISO technical committees. Each member body interested in a subject for which a technical committee has been established has the right to be represented on that committee. International organizations, governmental and non-governmental, in liaison with ISO, also take part in the work. ISO collaborates closely with the International Electrotechnical Commission (IEC) on all matters of electrotechnical standardization.

Draft International Standards adopted by the technical committees are circulated to the member bodies for voting. Publication as an International Standard requires approval by at least 75 % of the member bodies casting a vote.

International Standard ISO 9908 was prepared by Technical Committee ISO/TC 115, *Pumps*, Sub-Committee SC 1, *Dimensions and technical specifications of pumps*.

Annexes A, B and C form an integral part of this International Standard. Annexes D, E, F and G are for information only.

Copyright International Organization for Standardization

Introduction

This International Standard is the third of a set dealing with technical specifications of centrifugal pumps; they are designated as Classes I, II and III. Class I (see ISO 9905) comprises the most severe and Class III (this International Standard) the least severe requirements. For requirements for Class II centrifugal pumps, see ISO 5199.

The selection of the class to be used is made in accordance with the technical requirements for the application for which the pump is intended. **The class chosen is to be agreed between purchaser and manufacturer/supplier.**

The safety requirements of the field of application are furthermore to be taken into account.

However, it is not possible to standardize the class of technical requirements for centrifugal pumps for a certain field of application, because each field of application comprises different requirements. All classes (I, II and III) can be used in accordance with the different requirements of the pump application. It may happen that pumps built in accordance with Classes I, II and III may work beside each other in one plant.

Further text covering specific applications or industry requirements are dealt with later in separate standards.

Criteria for the selection of a pump of the required class for a certain application may be based on:

— reliability,

— operating conditions,

— environmental conditions.

Throughout this International Standard, text written in bold letters indicates where a decision may be required by the purchaser, or where agreement is required between the purchaser and manufacturer/supplier.

Copyright International Organization for Standardization

Technical specifications for centrifugal pumps — Class III

1 Scope

1.1 This International Standard covers Class III requirements for centrifugal pumps of single stage, multistage, horizontal or vertical construction (coupled or close-coupled) with any drive and any installation for general application.

1.2 This International Standard includes design features concerned with installation, maintenance and safety of such pumps including baseplate, coupling and auxiliary piping but excluding the driver, if it is not an integral part of the pump.

1.3 Where the application of this International Standard has been called for:

a) and requires a specific design feature, alternative designs may be offered which meet the intent of this International Standard provided that the alternative is described in detail.

b) pumps not complying with all requirements of this International Standard may be offered for consideration, provided that all deviations are stated.

2 Normative references

The following standards contain provisions which, through reference in this text, constitute provisions of this International Standard. At the time of publication, the editions indicated were valid. All standards are subject to revision, and parties to agreements based on this International Standard are encouraged to investigate the possibility of applying the most recent editions of the standards indicated below. Members of IEC and ISO maintain registers of currently valid International Standards.

ISO 76:1987, *Rolling bearings — Static load ratings.*

ISO 281:1990, *Rolling bearings — Dynamic load ratings and rating life.*

ISO 2372:1974, *Mechanical vibration of machines with operating speeds from 10 to 200 rev/s — Basis for specifying evaluation standards.*

ISO 2548:1973, *Centrifugal, mixed flow and axial pumps — Code for acceptance tests — Class C (It is planned to combine ISO 2548 with ISO 3555 during their next revision to create a new International Standard).*

ISO 3069:1974, *End suction centrifugal pumps — Dimensions of cavities for mechanical seals and for soft packing.*

ISO 3555:1977, *Centrifugal, mixed flow and axial pumps — Code for acceptance tests — Class B (It is planned to combine ISO 3555 with ISO 2548 during their next revision to create a new International Standard).*

ISO 7005-1:1992, *Metallic flanges — Part 1: Steel flanges.*

ISO 7005-2:1988, *Metallic flanges — Part 2: Cast iron flanges.*

ISO 7005-3:1988, *Metallic flanges — Part 3: Copper alloy and composite flanges.*

ISO 9905:—[1], *Technical specifications for centrifugal pumps — Class I.*

1) To be published.

Copyright International Organization for Standardization

3 Definitions

For the purposes of this International Standard, the definitions given in ISO 9905 and the following definitions apply.

3.1 rated conditions: Conditions (driver excluded) that define the (guarantee) point necessary to meet all defined operating conditions, taking into account any necessary margins.

NOTE 1 This definition differs slightly from that given in ISO 9905.

3.2 rated driver output: The maximum permissible driver power output under site operating conditions.

3.3 pressure-temperature rating: Relationship between pressure and temperature given in the form of a graph (see figure 1).

4 Design

4.1 General

Whenever the documents include contradicting technical requirements, they apply in the following sequence:

a) purchase order (or enquiry if no order is placed) (see annex B);

b) data sheet (see annex A);

c) this International Standard;

d) other standards to which reference is made in the order (or enquiry if no order is placed).

4.1.1 Characteristic curve

The characteristic curve shall indicate the allowable operating range of the pump.

4.1.2 Net positive suction head (NPSH)

The NPSHR shall be based on cold water as specified in ISO 2548 and ISO 3555. The NPSHA must exceed NPSHR by a margin of at least 0,5 m. The basis for use in performance curves is that NPSH corresponding to a drop of 3 % of the total head of the first stage of the pump (NPSH3).

4.1.3 Installation

The pumps should preferably be suitable for outdoor installation under normal environmental conditions. If they are suitable only for indoor installation this information shall be clearly stated in the manufacturer/supplier's documentation.

For outdoor installation, the range of environmental conditions shall be specified by the purchaser.

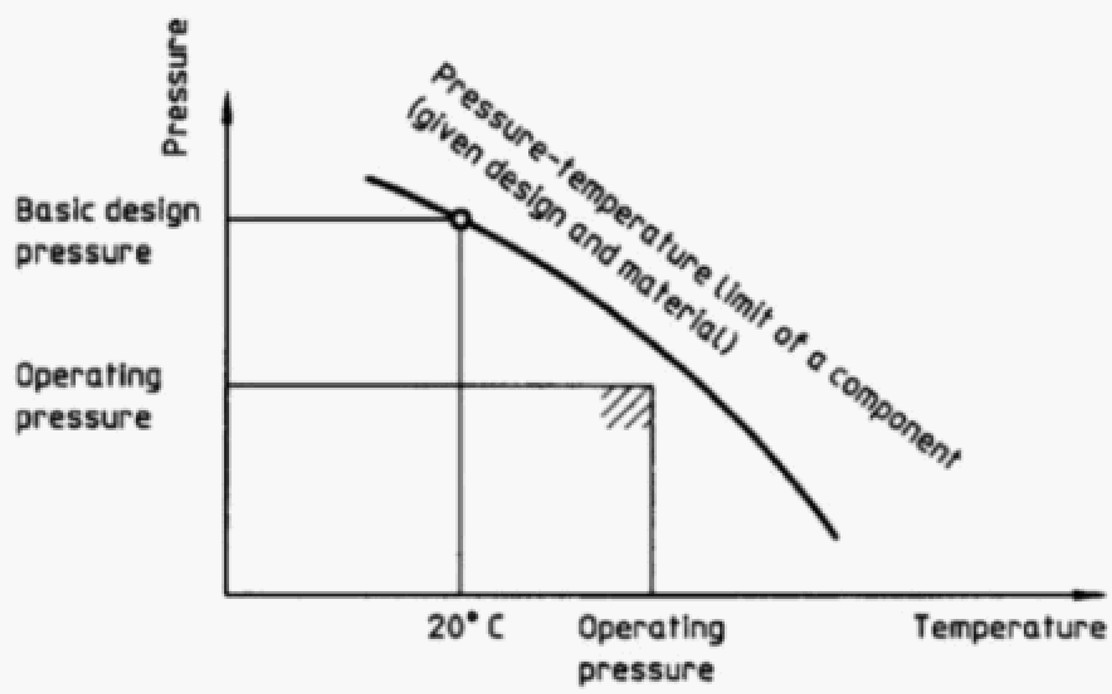

Figure 1 — Relationship between temperature and pressure

Copyright International Organization for Standardization

4.2 Prime movers

4.2.1 Defined operating conditions

Prime movers required as driver for coupled pumps shall have power output ratings at least equal to the percentage of rated pump power input given in figure 2 for the range of 1 kW to 100 kW. **For pump power input outside this range, the percentage is to be agreed upon between manufacturer/supplier and purchaser.** Where the prime mover has an output rating covering the power requirements at any operating conditions of the impeller diameter installed, no extra margins are required.

4.2.2 Undefined operating conditions

Prime movers as drivers for close-coupled pumps shall have power output ratings covering the power requirements at any operating conditions of the impeller diameter installed. These conditions eliminate the need for extra margins.

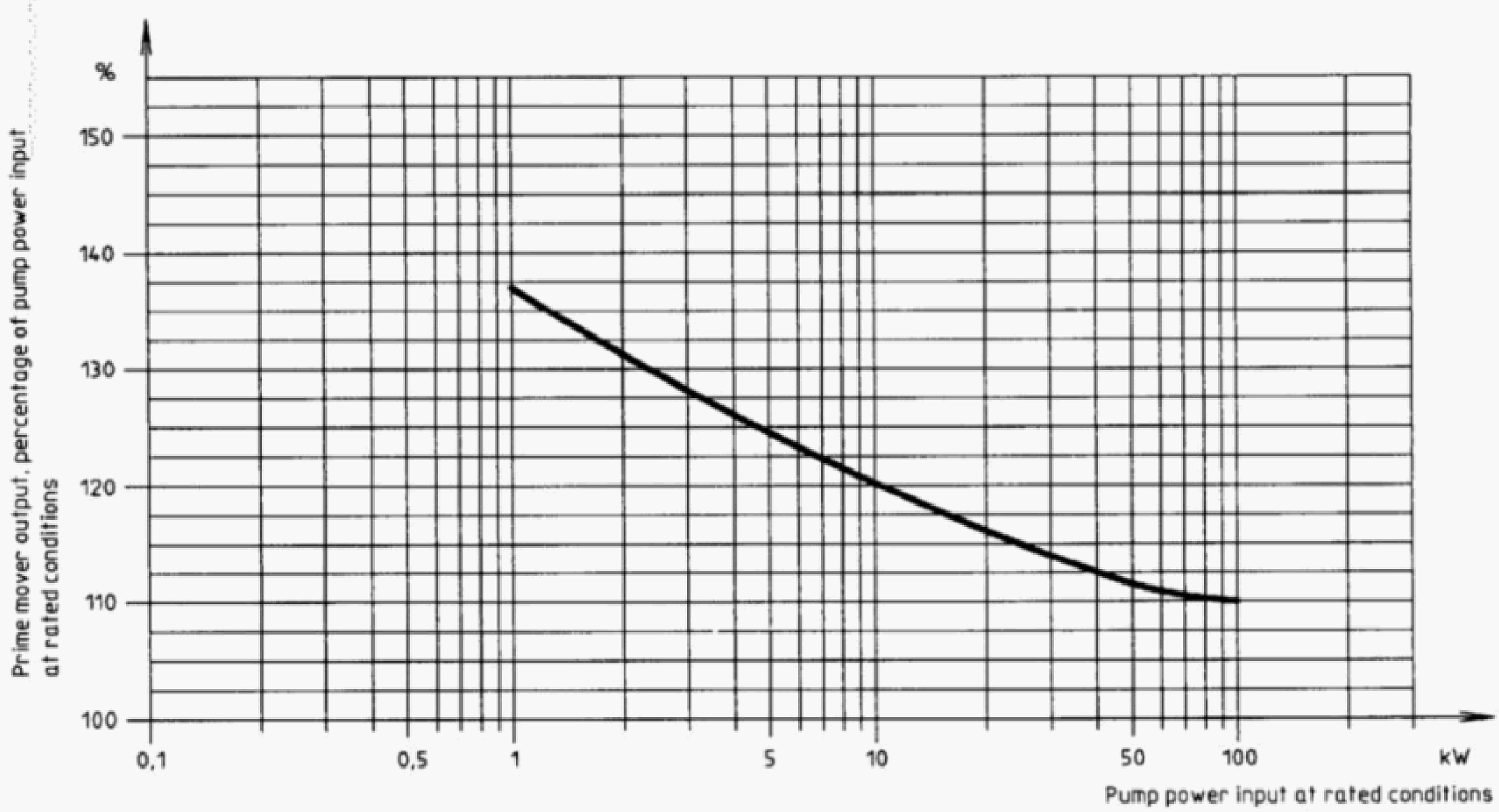

Figure 2 — Driver output percentage of rated pump power required in the range 1 kW to 100 kW

Copyright International Organization for Standardization

4.3 Critical speed, balance and vibration

4.3.1 Critical speed

Under operating conditions, the actual first lateral critical speed of the rotor when coupled to the drive agreed upon shall be at least 10 % above the maximum allowable continuous speed including the trip speed of a turbine-driven pump. For vertical lineshaft pumps, a flexible shaft is permitted.

4.3.2 Balance and vibration

4.3.2.1 Horizontal pumps

Unfiltered vibration shall not exceed the vibration severity limits given in table 1 when measured on the manufacturer/supplier's test facilities. These values are measured radially at the bearing housing at a single operating point at rated speed (± 5 %) and rated flow (± 5 %) when operating without cavitation.

Pumps with a special impeller, for example a single channel impeller, may exceed the limits given in table 1. In such case the pump manufacturer/supplier should indicate this in his offer.

4.3.2.2 Vertical lineshaft pumps

a) Vibration readings shall be taken on the top flange of the driver mount on vertical lineshaft pumps with rigid couplings and near to the top pump bearing on vertical pumps with flexible couplings.

b) Vibration limits for both rolling and sleeve bearing pumps shall not exceed a velocity of 7,1 mm/s rms during shop test at rated speed (± 5 %), and rated flow (± 5 %) operating without cavitation.

Table 1 — Limits of vibration severity for horizontal pumps with multivane impellers

Speed of rotation n min^{-1}	Maximum rms values of the vibration velocity for the shaft centreline height h_1 [1) 2)] mm/s	
	$h_1 \leqslant 225$ mm	$h_1 > 225$ mm
$n \leqslant 1\,800$	2,8	4,5
$1\,800 < n \leqslant 4\,500$	4,5	7,1

1) Based on ISO 2372.

2) For horizontal foot-mounted pumps, h_1 is the distance between baseplate area in contact with pump feet and pump shaft centreline.

Copyright International Organization for Standardization

4.4 Pressure-containing parts

4.4.1 Pressure-temperature rating

The pressure limit (maximum allowable working pressure) of the pump at the most severe operating conditions shall be clearly defined by the manufacturer/supplier. In no case may the rated pressure of the pump (casing and cover, including shaft seal housing and gland follower/end plate) exceed that of the pump flanges.

The basic design pressure of the pump shall be a gauge pressure of at least 6 bar[2] at 20 °C when made of cast iron, ductile iron, carbon steel or stainless steel.

For materials the tensile requirements of which do not permit the 6 bar rating, the pressure-temperature rating shall be adjusted according to the stress-temperature rating for the material and shall be clearly stated by the manufacturer/supplier.

Low head pumps may have a lower pressure-temperature rating if this is clearly stated by the manufacturer/supplier on the nameplate and data sheet.

4.4.2 Wall thickness

Pressure casings including the shaft seal housing and gland end plate shall be of such thickness as will be suitable for containing pressure and limiting distortion under the maximum allowable working pressure at operating temperature.

The casing shall also be suitable for the hydrostatic test pressure (see clause 6) at ambient temperature.

4.4.3 Materials

The materials used for pressure-containing parts shall depend on the liquid pumped and the application of the pump (see clause 5).

4.4.4 Mechanical features

4.4.4.1 Dismantling

The pump should be designed to permit necessary dismantling for spare part replacement without disturbing inlet and outlet connections. If the design is such that dismantling will cause some disturbance, then it should be so stated.

4.4.4.2 Casing gaskets

Casing gaskets shall be of a design suitable for the rated operating conditions and for hydrostatic test conditions at ambient temperature.

4.4.4.3 External bolting

Bolts or studs that connect pressure-containing parts shall be selected to be adequate for the maximum allowable working pressure and for normal tightening procedures.

4.5 Branches (nozzles) and miscellaneous connections

NOTE 2 For the purpose of this International Standard the terms branch and nozzle are synonymous.

4.5.1 Type and size

Type and size of fluid connections shall be stated in the manufacturer/supplier's document.

4.5.2 Closures

Vent, pressure-gauge and drain openings shall be fitted with removable closures adequate to contain the maximum allowable working pressures and of material suitable for the pumped liquid.

4.6 External forces and moments on branches (inlet and outlet)

The manufacturer/supplier shall provide details of allowable external forces and moments on branches on request.

4.7 Branch (nozzle) flanges

If circular flanges are used the flange envelope shall be of a size to enable flanges as specified in ISO 7005-1, ISO 7005-2 and ISO 7005-3 to be used. **If the pump manufacturer/supplier's standard pattern entails a flange thickness and a diameter greater than that of the rating specified, the heavier flange may be supplied if requested by the manufacturer/supplier, but it shall be faced and drilled as specified above.**

Bolt holes shall straddle the centreline.

4.8 Impellers

4.8.1 Impeller design

Impellers of closed, semi-open or open designs may be selected according to the application.

4.8.2 Securing of impellers

Impellers shall be secured against circumferential and axial movement when rotating in the intended direction of rotation. Attention shall be drawn to the secure

2) 1 bar = 0,1 MPa

Copyright International Organization for Standardization

attachment of impeller in either direction of close-coupled pumps.

4.9 Running clearance

When establishing running clearances between stationary and moving parts, consideration shall be given to operating conditions and properties of the material (such as hardness and gall resistance) used for these parts. Clearances shall be sized to prevent contact under operating conditions, and material combinations selected to minimize the risk of seizure and erosion.

4.10 Shafts and shaft sleeves

4.10.1 General

Shafts shall be of ample size and stiffness to:

a) transmit the prime mover rated power;

b) minimize unsatisfactory packing or seal performance;

c) minimize wear and the risk of seizure;

d) take due consideration of the method of starting and inertia loading involved.

4.10.2 Surface roughness

Surface roughness in the gland sealing area shall be suitable for the satisfactory operation of either mechanical seal or gland packing.

4.10.3 Shaft deflection

The calculated shaft deflection at the radial plane through the outer face of the stuffing box caused by radial loads exerted during operation of the pump shall not exceed 50 µm, within the allowable operating range, as verified by prototype testing.

4.10.4 Diameter

The diameter of the portions of the shaft or shaft sleeves in the seal area shall be in accordance with ISO 3069 where practicable.

4.10.5 Shaft runout

Manufacture and assembly of the shaft and sleeve, if fitted, should ensure that the runout at a radial plane through the outer face of the stuffing box is not greater than 50 µm for nominal outside diameters smaller than 50 mm, not greater than 80 µm for nominal outside diameters 50 mm to 100 mm, and not greater than 100 µm for nominal outside diameters greater than 100 mm.

4.10.6 Axial movement

Axial movement of the rotor permitted by the bearings shall not adversely affect the performance of the mechanical seal.

4.11 Bearings

4.11.1 General

Rolling bearings of standard design are normally to be used.

4.11.2 Rolling bearing life

Rolling bearings shall be selected and rated in accordance with ISO 76 and ISO 281; the "basic rating life (L_{10})" shall be at least 10 000 h when operating within the allowable operating range.

4.11.3 Lubrication

The operating instructions shall include information on the type and amount of lubricant to be used and the frequency of application.

4.11.4 Bearing housing design

The bearing housing shall be designed to prevent the ingress of contaminants and the escape of the lubricant under normal operating conditions.

4.12 Shaft sealing

4.12.1 General

The pump design shaft permit the use of either mechanical seal(s) or soft packing (with the exception of glandless pumps).

The seal cavity dimensions shall be in accordance with ISO 3069 except where the operating conditions dictate otherwise.

4.12.2 Stuffing box

Ample space shall be provided for repacking, including compression of packing material, without removing or dismantling any part other than gland components and guards.

The gland shall withstand forces necessary for compressing the packing material.

4.12.3 Mechanical seals

The mechanical seal shall be suitable to withstand the given operating conditions.

Appropriate material for the seal components shall be chosen to withstand corrosion, erosion, temperature and mechanical stress, etc.

Copyright International Organization for Standardization

A mechanical seal shall not be subjected to a hydrostatic test pressure exceeding the seal pressure limit.

4.13 Nameplate

Nameplates shall be securely attached to the pump.

The minimum information required on the nameplate shall be name (or trademark) and address of the manufacturer/supplier, identification number of the pump (for example, serial number or product number), type and size.

Further space may be provided for additional information on rate of flow, pump total head and pump speed.

4.14 Direction of rotation

The direction of rotation shall be indicated by a prominently located arrow of durable construction. For portable close-coupled pumps the direction of the starting reaction may be indicated as alternative.

4.15 Couplings

If the driver is not integral with the pump design, the pump shall normally be coupled to the driver by a flexible coupling.

Coupling halves shall be effectively secured against circumferential and axial movement relative to the shafts.

If coupling components are balanced together, the correct assembly position shall be shown by permanent and visible marks.

An appropriate fixed guard shall be provided. Guards shall be designed in accordance with national safety regulations.

4.16 Baseplates for horizontal pumps

4.16.1 General

Baseplates designed for installations without grouting shall be rigid enough for freestanding installation or for installation by bolting on a foundation without grouting.

Baseplates requiring grouting shall be designed to ensure proper grouting (for example trapping of air shall be prevented).

4.16.2 Assembly of pump and driver on baseplate

Provision shall be made for spacers or shims for vertical adjustment of driver alignment to permit compensation for pump, driver and baseplate tolerances.

If the purchaser supplies a driver or coupling, he shall provide the pump manufacturer/supplier with certified installation dimensions of these components.

If the driver is not mounted by the pump manufacturer/supplier, the driver fixing holes shall not be drilled, if not otherwise specified.

5 Materials

The materials shall be selected by the manufacturer/supplier for the intended liquid to be pumped and for the intended application, unless specified by the purchaser.

6 Shop inspection and tests

A hydrostatic test shall be performed for pressure-containing parts of a pump at a test pressure of at least 1,3 times the basic design pressure.

Pumps are normally subject only to such other internal shop tests as may be decided by the manufacturer/supplier. If witnessed or nonwitnessed tests are required, this should be stated on the enquiry or order.

If a hydraulic performance test is required it shall be made in accordance with ISO 2548 and ISO 3555 Class II for clean cold water. For liquids other than clean cold water and for special operating conditions, hydraulic performance is to be calculated by the manufacturer/supplier and the conversion method is to be indicated.

7 Preparation for dispatch

7.1 General

All internal parts shall be drained prior to shipment. Where bearings are oil-lubricated, the bearing housings shall be drained and a label warning that prior to startup filling with oil is required, shall be fitted.

7.2 Securing of rotating parts for transport

In order to avoid damage to bearings caused by vibration during transport, rotating parts shall be secured as required according to mode and distance of transport, mass of rotor and bearings design. In such cases a warning label shall be securely attached.

7.3 Openings

All openings to the pressure chamber shall have weather-resistant closures for transport, substantial enough to withstand accidental damage.

Copyright International Organization for Standardization

7.4 Identification

The pump and all components supplied loose with it are to be clearly and durably marked with the prescribed identification number.

7.5 Documentation

The specified copies of documents shall be supplied with the pump — if not otherwise specified according to annex C.

Copyright International Organization for Standardization

Annex A
(normative)

Centrifugal pump — Data sheet

If a data sheet is requested or required, the following centrifugal pump data sheet serves:

— the purchaser for enquiring, ordering and contract handling; and

— the manufacturer/supplier for tendering and manufacturing.

The specification of the components is in accordance with this International Standard.

To provide more space for writing or typing, the data sheet can be enlarged and split in two pages but the line numbering in each case shall conform to the standard data sheet.

Instructions for completing the data sheet:

— the information required is to be indicated with a cross (×) in the appropriate column;

— the ◤ so marked lines are to be completed by the purchaser for enquiry;

— the blank columns can be used to indicate information required and also for revision marks indicating where information has been inserted or revised;

— to facilitate communication about the information in an intended line and position of the column, use the following key:

for 3 columns

		Column 1		Column 2		Column 3	
29	X		X		X		29

Example: Line 29/2 — Column No.
Line No.

for 2 columns

		Column 1		Column 2	
55	X		X		55

Example: Line 55/1 — Column No.
Line No.

for 1 column

7	X		7

Example: Line 7
Line No.

Copyright International Organization for Standardization

More detailed explanations on the individual terms are given below, insofar as the terms are not considered to be generally understood.

Line	Term	Explanation
1/1 2/1	Plant	Kind of plant, location, operation, building or other characteristics
1/2	Service	Operational duty, for example boiler feed water pump, waste water pump, fire water pump, circulation pump, reflux pump, etc.
2/2	Specification class	For example, ISO 9908
3/2 4/2	Driver	Should drive not be direct, information is to be given under "Remarks"
5/1 6/1	Purchaser	Company name
5/2 6/2	Manufacturer/supplier	Company name
7	Site conditions	For example, outdoor, indoor installation, other environmental conditions
8/1	Liquid	A fairly accurate designation of the fluid. When fluid is a mixture, an analysis should be given under "Remarks"
8/3	NPSH available at rated/normal flow	It may be necessary, when specifying NPSH available, to take into account abnormal operating conditions
9/1	Solid content	Solid constituents in fluid with grain size, quantity in mass percentage of liquid, grain character (round, cubic, oblong) and solids density (kg/dm^3) and other specific properties (for example, tendency to agglomerate) are to be given under "Remarks"
10/1	Corrosion by	Corrosive constituents of liquid
12/2	Inlet gauge pressure, max.	Maximum pressure in the inlet during operation, for example, by varying level, system pressures, etc.
13/3	Maximum pump power input at rated impeller diameter	Maximum pump power requirements at rated impeller diameter, specified density, viscosity and speed
14/3	Maximum pump power input at maximum impeller diameter	Maximum pump power requirements at maximum impeller diameter, specified density, viscosity and speed
15/3	Rated driver power output	To be specified by consideration of: a) duty and method of operation; b) location of operating point in performance diagram; c) friction loss at shaft seal; d) circulation flow for mechanical seal; e) properties of medium (solids, density, viscosity).

Copyright International Organization for Standardization

Line	Term	Explanation
16/1	Hazard	For example, flammable, toxic, odorous, caustic, radiation
16/2	Head rated/curve, maximum	Maximum head at installed impeller diameter
20/2	Thrust reduction by	For example, axial thrust bearing, balancing disc/drum, balancing hole, opposed impeller
21/2	Radial bearing type, size	Internal clearances to be included
22/2	Thrust bearing, type, size	Internal clearances to be included
23/2	Lubrication	Type of lubricant, for example, oil, pressure oil, grease, etc.
	Lubricant supply	For example, oil pump, grease pump, oil level controller, grease cup, sight glass gauge stick, etc.
24/1	Impeller type	Type of impeller, for example, closed, open, channel, etc.
24/2	Shaft seal arrangement	Use adequate designation according to annex E
26/2	Shaft seal	For mechanical seal: — type: balanced (B) unbalanced (U) bellows (Z) — size: nominal shaft or sleeve diameter in millimetres based upon shaft diameter passing through stationary ring (e.g. ISO 3069) For stuffing box: — size: diameter of seal cavity according to ISO 3069
26/3	Design pressure	Relating to auxiliaries (piping, cooler, etc.)
27/3	Test pressure	Relating to auxiliaries (piping, cooler, etc.)
33/1	Casing support	For example, shaft centre, bottom, bearing bracket
34/1	Casing split	Radial, axial, relating to the shaft
35/3 to 36/3	Driver	For more information, use separate data sheets or space under "Remarks"
44/2 to 49/2	Mechanical seal components	Use material code for mechanical seal components according to J.2 of ISO 9905, if required
46/2 to 47/2	Mechanical seal	For example, O-rings
50 to 52	Tests	Company or authority which is to carry out the different tests, for example manufacturer/supplier, and to what standards (51) and name of authority for witnessed tests (52)

Copyright International Organization for Standardization

Centrifugal pump
Data sheet

1	Plant:				Service:		1
2					Specification class:		2
		No. req.	Pump type and size: horizontal [1]	Pump type and size: vertical [1]	Manufacturer serial No.	Driver: Kind / Driver: Type, size / Item No.	
3	Operation						3
4	Standby						4
5	Customer:	Enquiry No.:		Date:	Supplier:	Proposal No.:	Date: 5
6		Order No.:		Date:		Contract No.:	Date: 6
7	Site conditions:						7

Operating conditions

8	Liquid			Flow	rated	m^3/h	NPSH at rated/normal flow	available	/ m	8
9	Solid content	% of mass			normal/max.	/ m^3/h		required	/ m	9
10	Corrosion by				min. required/perm.	/ m^3/h	Pump speed rated		min^{-1}	10
11	Erosion by			Inlet gauge pressure	rated	bar	Pump power input	rated	kW	11
12	Operating temp. (O.T.)	°C			max.	bar		normal	kW	12
13	Density at O.T.	kg/dm^3		Outlet gauge pressure	rated	bar	Max. pump power input	at rated impeller ϕ	kW	13
14	Kinematic viscosity at O.T.	mm^2/s			max.	bar		at max. impeller ϕ	kW	14
15	Vapour pressure (abs.) at O.T.	bar		Diff. pressure	rated	bar	Rated driver output		kW	15
16	Hazard			Head rated curve max./nom.		/ m	Self priming		yes, no	16

Construction features

17	Basic design pressure		bar	Total clearance	Wear ring/plates	mm	Cooling (C), Series (S) / Heating (H), Parallel (P)	C	H	S	P	17
18	Rated pressure	pump	bar at °C		Shaft bushes	mm						18
19		auxiliaries	bar at °C		Balance drum	mm	Casing					19
20	Test pressure		bar	Thrust reduction by			Bearing					20
21	Number of stages			Radial bearing	Type, size		Oil cooler					21
22	Impeller	rated ϕ / installed ϕ	/ mm	Thrust bearing			Seal chamber					22
23		max. / min. ϕ	/ mm	Lubrication/supply		/	Seal circ. cooler					23
24		Type			Arrangement		Seal seat					24
25	Rotation facing pump driven end	pump*	clockwise/anticlockwise		Manufacturer		Pedestals					25
26		driver**	clockwise/anticlockwise		Type, size		Design pressure bar					26

Copyright International Organization for Standardization

27		Inlet flange	Size	Position			Shaft seal	Pressure limit			Test pressure	bar					27
28	◤		Rating and facing					Static pressure			External supplies	Function	Fluid	l/h	°C	inlet/outlet bar	28
29	◤	Outlet flange						Dynamic pressure									29
30			Size	Position				Temperature	bar								30
31		Vent, tapped					Seal piping	Arrangement									31
32		Drain, tapped						Suppl. by				Cooling					32
33		Casing support				◤	Total weight incl. drive, ca.		kg			Heating					33
34		Casing split			radial/axial		Volute/Diffuser		single/double/ multi	◤		Electricity	V	Phase		Hz	34
	Auxiliaries																
35		Coupling	Manufacturer			◤	Coupling guard suppl. by			◤	Driver	suppl. by					35
36			Type / Size				Baseplate	for	pump/drive/driver	◤		mounted by					36
37			Spacer length		mm			Type	freestd./grouted/non-gro.	◤	Aux. piping suppl. by						37
38			Suppl. by			◤		Suppl. by		◤	Anchor bolts suppl. by						38
	Materials																
39		Casing					Shaft sleeve				Stuffing box	Gland follower					39
40		External bolting					Throat bush					Packing					40
41		Casing gasket					Mechanical seal	Seal end plate				Lantern ring					41
42		Impeller						Throttle bush			Coupling	Hubs/spacer		/			42
43		Wear ring	Impeller						pump side atmosph. side			Flexible elem.					43
44			Casing					Rotating ring				Guard					44
45		Wear plate / lining			/			Stationary ring			Baseplate						45
46		Shaft						Secondary seal	rotating		Paint						46
47		Case bush							stationary								47
48		Bearing housing adapter						Spring									48
49		Bearing housing						Other metal parts									49
	Tests																

		Tests	Material	Hydrostatic	Hydraulic	NPSH		Inspection	Final Inspection	
50		Tests	Material	Hydrostatic	Hydraulic	NPSH		Inspection	Final Inspection	50
51	◤	Reference								51
52	◤	Witnessed by								52

	Documentation							
53		Performance curve No.	Proposal		Drawings	Installation dim.		53
54			Test			Piping	Seal	54
55		Instruction manual					Auxiliary system	55
56		Spare part list No.				Assembly	Pump	56
57							Shaft seal	57

Remarks: 1) Strike out if not applicable; ◤ so marked lines are to be completed by the purchaser for enquiry.
2) All pressures are gauge, except vapour and differential pressure.

* viewed from the drive to the pump
** viewed from the pump to the drive

Sheet	of	Rev. Date:	Drawing No.

Copyright International Organization for Standardization

Annex B
(normative)

Enquiry, proposal, purchase order

B.1 Enquiry

The enquiry shall include all information necessary for selection of the pump.

B.1.1 Proposal

The proposal shall include the following technical information:

— preliminary outline drawing with installation information;

— typical cross-section drawing or exploded view;

— characteristic curve, if specified.

B.2 Purchase order

The purchase order shall include technical information, for example operating conditions, construction features, materials, auxiliaries and required documentation.

Copyright International Organization for Standardization

Annex C
(normative)

Documentation

The agreed number of copies of the following documents shall be supplied with the pump, if not otherwise specified:

— outline drawing with installation information;

— instruction manual, including information for installation, commissioning, operation, shutdown, maintenance, cross-section drawings or exploded view with spare part list including material and standard part designation;

— performance curve, if required.

Copyright International Organization for Standardization

Annex D
(informative)

Examples of seal arrangements

The following figures show the principle of seal arrangements and not details of their construction.

D.1 Soft packing[3] (P)

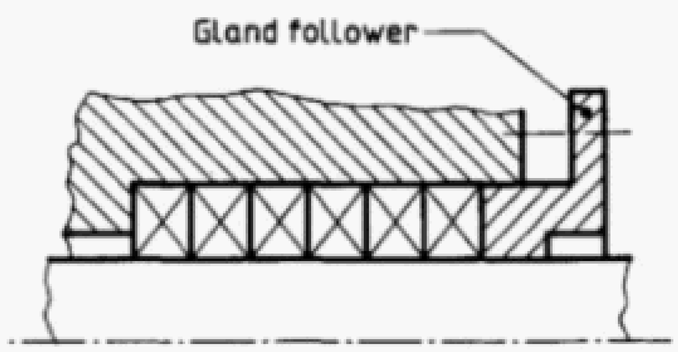

P1 Soft packing

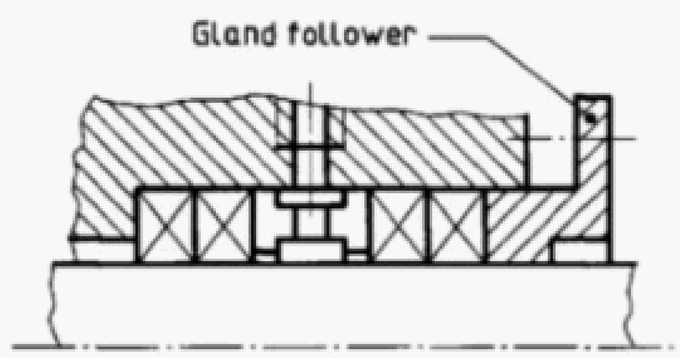

P2 Soft packing with lantern ring (used for injection or circulation of liquid for sealing, buffering, cooling, etc.)

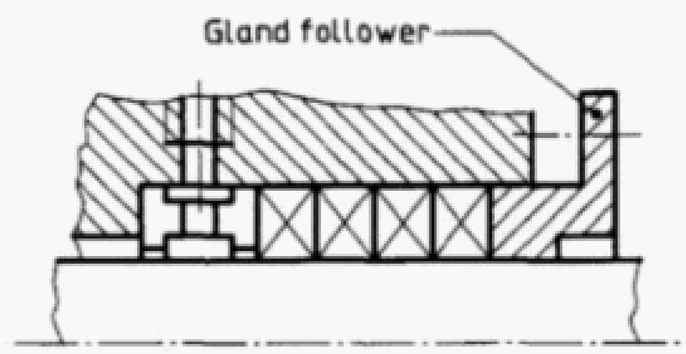

P3 Soft packing with lantern ring (normally with throat bush used for injection and circulation of liquid for cooling, to clear deposits, etc.)

D.2 Single mechanical seal[3] (S)

These seals can be

a) unbalanced (U) (as in the figure) or balanced (B) or bellows (Z) normally;

b) with or without circulation or injection to the sealed faces;

c) with or without throat bush.

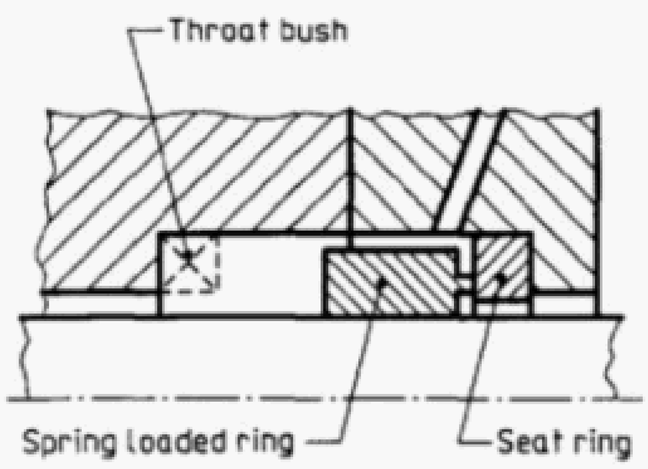

S1 Internal arrangement

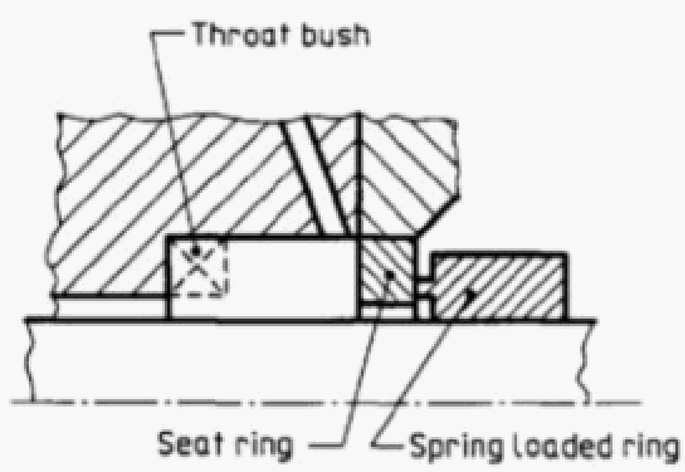

S2 External arrangement

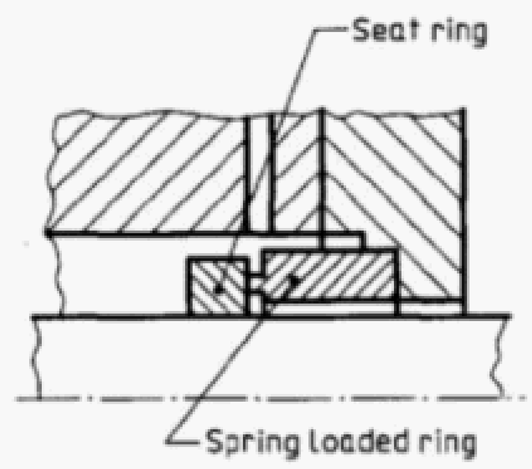

S3 Internal arrangement rotating seal ring (mating ring)

3) Left-hand side of figures shows the pump side, right-hand side shows the atmospheric side.

Copyright International Organization for Standardization

D.3 Multiple mechanical seal[3] (D)

Either or both of these seals may be unbalanced (as in the figure) or balanced.

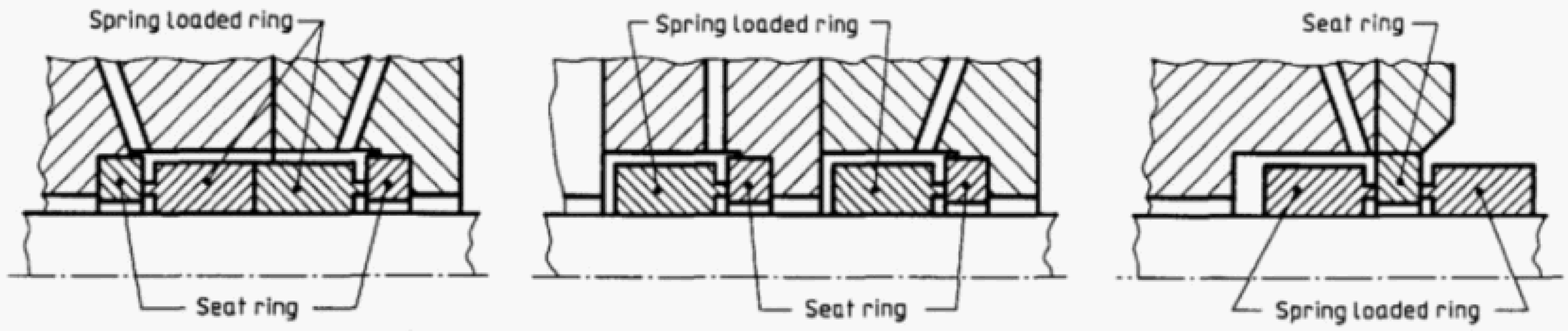

D1 Back-to-back arrangement

D2 Tandem arrangement

D3 Face-to-face arrangement
[The same arrangements are possible with a rotating ring (mating ring)]

D.4 Quench arrangement (Q) for soft packing, single and multiple mechanical seal[3]

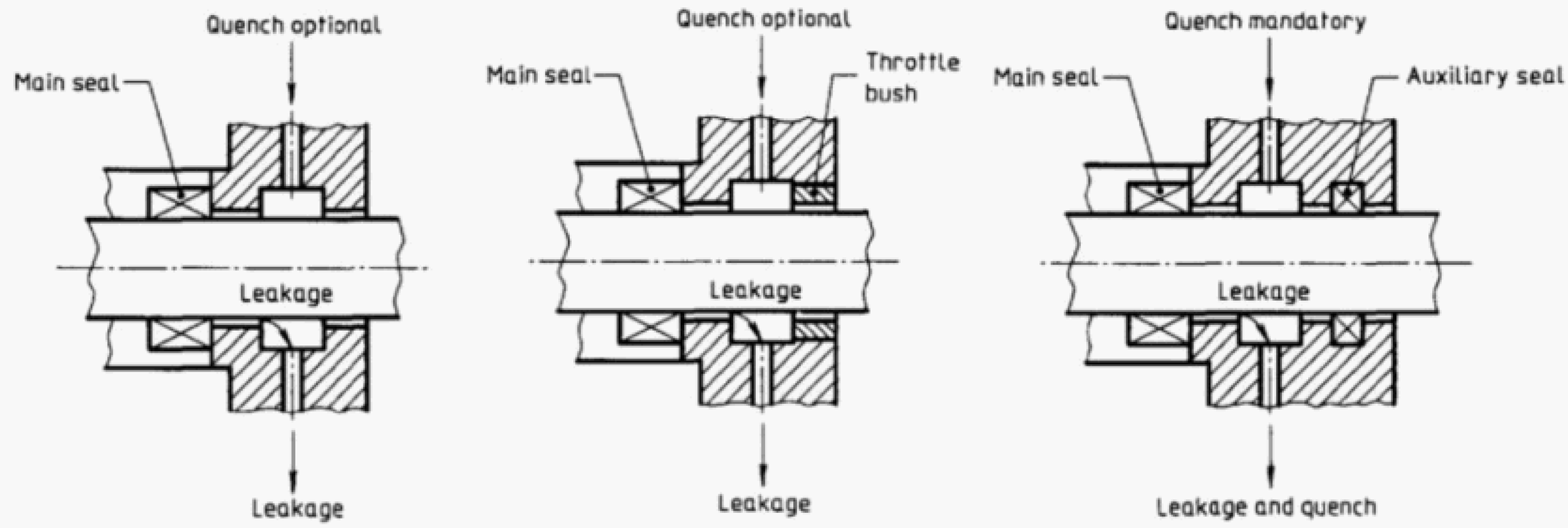

Q1 Main seal without throttle bush or auxiliary seal

Q2 Main seal with throttle bush

Q3 Main seal with auxiliary seal or packing

Copyright International Organization for Standardization

Annex E
(informative)

Piping arrangements for seals

The following figures show the principle of piping arrangements for seals and not details of their construction.

E.1 Seal types according to basic piping

Basic arrangement			Applied to			
Designation code	Figure	Description	Soft packing P	Single mechanical seal S	Multiple mechanical seal D	Quench Q
00	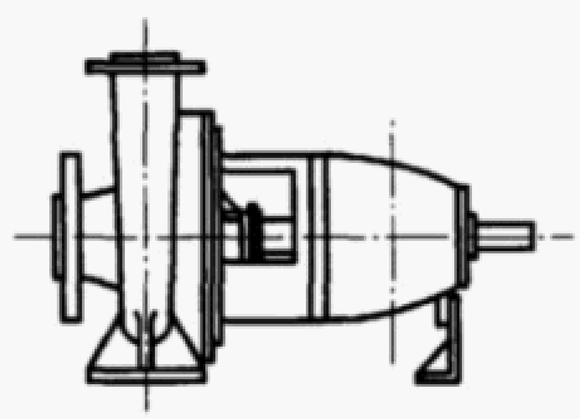	No piping, no circulation	×	×		
01		No piping, internal circulation	×	×		
02	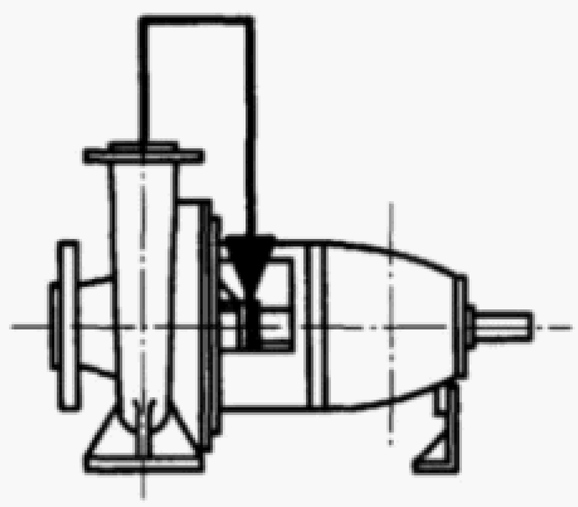	Circulation fluid from pump outlet to seal cavity (with internal return)	×	×		
03	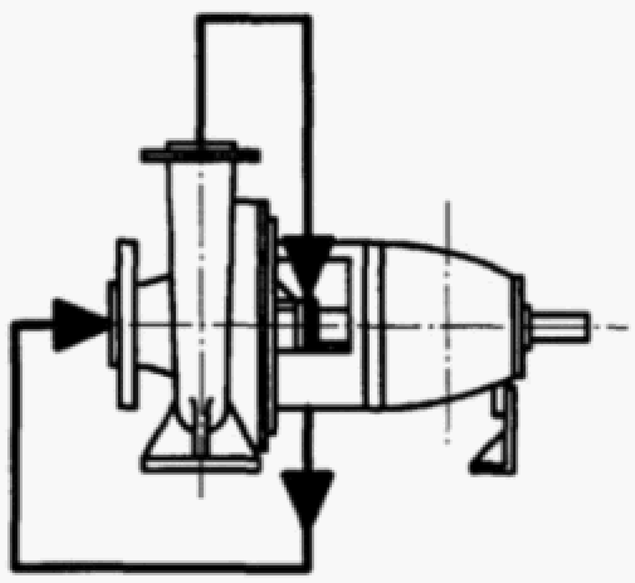	Circulation fluid from pump outlet to seal cavity and return to pump inlet	×	×		

Copyright International Organization for Standardization

Basic arrangement			Applied to			
Designation code	Figure	Description	Soft packing P	Single mechanical seal S	Multiple mechanical seal D	Quench Q
07	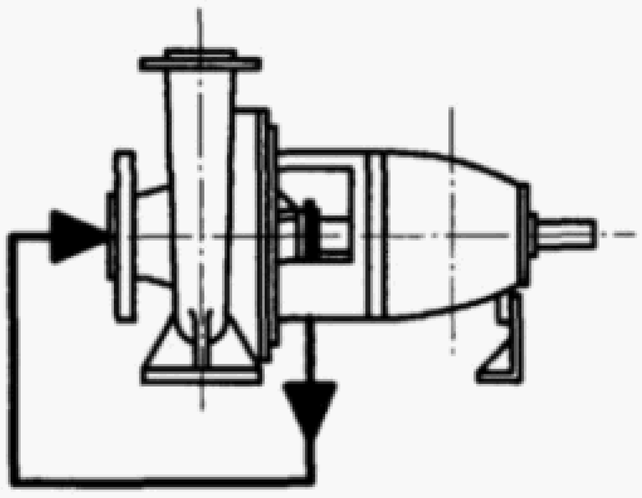	Internal circulation fluid to seal and return to pump inlet	×	×		
08	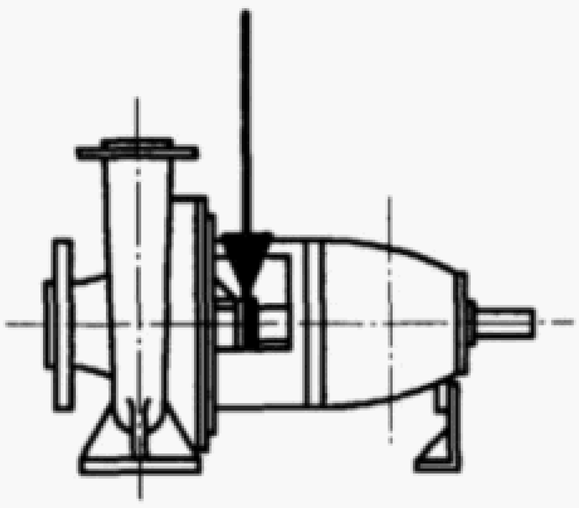	Fluid from an external source a) to seal cavity with flow into pump b) to quench	×	×	×	×,

Copyright International Organization for Standardization

E.2 Designation examples

Example No.	Figure	Designation	Explanation
1	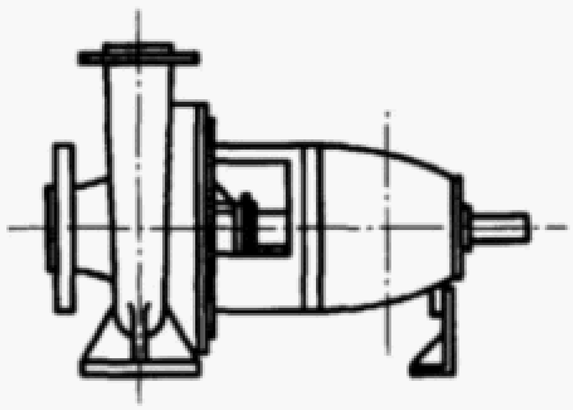	Soft packing Basic arrangement 01 P1.01	
2	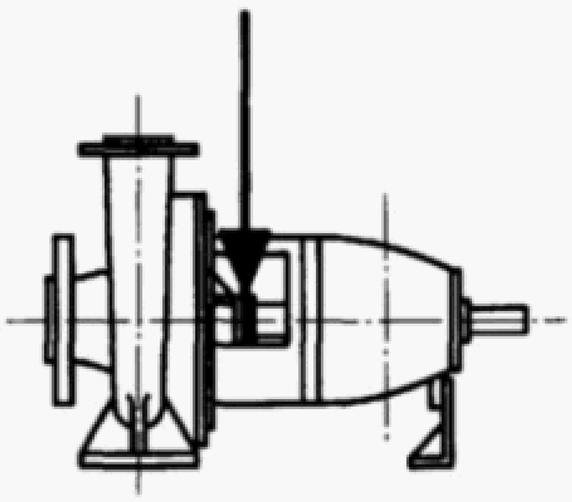	Single mechanical seal Basic arrangement 08 S1.08	

Copyright International Organization for Standardization

Annex F
(informative)

Check list

The following list indicates by paragraph number where a decision may be required by purchaser, or agreement is required between purchaser and manufacturer/supplier:

4.2 Prime movers
4.7 Branch (nozzle) flanges
5 Materials
6 Shop inspection and test

Inspections and tests requested.

Copyright International Organization for Standardization

Annex G
(informative)

Bibliography

[1] ISO 1940-1:1986, *Mechanical vibration — Balance quality requirements of rigid rotors — Part 1: Determination of permissible residual unbalance.*

[2] ISO 5199:1986, *Technical specifications for centrifugal pumps — Class II.*

[3] ISO 5343:1983, *Criteria for evaluating flexible rotor balance.*

[4] ISO 8821:1989, *Mechanical vibration — Balancing — Shaft and fitment key convention.*

Copyright International Organization for Standardization

UDC 621.671

Descriptors: pumps, centrifugal pumps, specifications, materials specifications, tests, performance tests, hydrostatic tests, technical data sheets.

Price based on 22 pages

Copyright International Organization for Standardization