INTERNATIONAL STANDARD

ISO 9386-1

First edition
2000-11-01

Power-operated lifting platforms for persons with impaired mobility — Rules for safety, dimensions and functional operation —

Part 1:
Vertical lifting platforms

Plates-formes élévatrices motorisées pour personnes à mobilité réduite — Règles de sécurité, dimensions et fonctionnement —

Partie 1: Plates-formes à course verticale

Reference number
ISO 9386-1:2000(E)

© ISO 2000

PDF disclaimer

This PDF file may contain embedded typefaces. In accordance with Adobe's licensing policy, this file may be printed or viewed but shall not be edited unless the typefaces which are embedded are licensed to and installed on the computer performing the editing. In downloading this file, parties accept therein the responsibility of not infringing Adobe's licensing policy. The ISO Central Secretariat accepts no liability in this area.

Adobe is a trademark of Adobe Systems Incorporated.

Details of the software products used to create this PDF file can be found in the General Info relative to the file; the PDF-creation parameters were optimized for printing. Every care has been taken to ensure that the file is suitable for use by ISO member bodies. In the unlikely event that a problem relating to it is found, please inform the Central Secretariat at the address given below.

© ISO 2000

All rights reserved. Unless otherwise specified, no part of this publication may be reproduced or utilized in any form or by any means, electronic or mechanical, including photocopying and microfilm, without permission in writing from either ISO at the address below or ISO's member body in the country of the requester.

ISO copyright office
Case postale 56 • CH-1211 Geneva 20
Tel. + 41 22 749 01 11
Fax + 41 22 749 09 47
E-mail copyright@iso.ch
Web www.iso.ch

Printed in Switzerland

Contents

Page

Foreword v
Introduction vi
1 Scope 1
2 Normative references 2
3 Terms and definitions 2
4 General requirements for lifting platforms 7
4.1 Pattern of use 7
4.2 Protection against hazards 7
4.3 General design 7
4.4 Design guidelines particular to the installation 7
4.5 Access for maintenance, repair and inspection 7
4.6 Fire resistance 8
4.7 Rated speed 8
4.8 Rated load 8
4.9 General safety factor 8
4.10 Resistance to operating forces 8
4.11 Protection of equipment against harmful external influences 8
4.12 Suppression of radio and television interference 9
4.13 Guarding 9
5 Guide rails, mechanical stops and mechanical blocking device 9
5.1 Guide rails 9
5.2 Mechanical stops and mechanical blocking device 9
6 Safety gear and overspeed governor 9
6.1 General 9
6.2 Control 10
6.3 Release 10
6.4 Access for inspection 10
6.5 Electrical checking 10
6.6 Overspeed governor 11
6.7 Rotation monitor unit 11
6.8 Safety nut 11
7 Driving units and drive systems 11
7.1 General requirements 11
7.2 Braking system 12
7.3 Emergency/manual operation 12
7.4 Additional requirements for rope suspension drive 13
7.5 Additional requirements for rack and pinion drive 14
7.6 Additional requirements for chain suspension drive 14
7.7 Additional requirements for screw and nut drive 15
7.8 Additional requirements for guided rope and ball drive 15
7.9 Additional requirements for worm-toothed segment drive 16
7.10 Additional requirements for friction/traction drive 16
7.11 Additional requirements for guided chain drive 16
7.12 Additional requirements for guided chain drive with bearing rollers and bearing segments 16
7.13 Additional requirements for scissor mechanism drive 16
7.14 Additional requirements for hydraulic drive 17
8 Electrical installation and equipment 20
8.1 General 20

© ISO 2000 – All rights reserved

8.2 Lighting and socket outlets 21
8.3 Drive contactors 21
8.4 Motor and brake circuits for stopping the machine and checking its stopped condition 21
8.5 Creepage and clearance distances and enclosure requirements 22
8.6 Protection against electrical faults 22
8.7 Electric safety devices 23
8.8 Time delay 24
8.9 Protection of the driving motor 24
8.10 Electrical wiring 24
8.11 Safety circuits 25
8.12 Residual current devices 26
8.13 Additional requirements for battery-powered operation 26
8.14 Cableless controls 26
8.15 Operating devices 27
8.16 Terminal limit switches and final limit safety switches 27
8.17 Emergency alarm devices 28

9 Specific requirements for lifting platforms in enclosed liftways 28
9.1 Liftway 28
9.2 Lifting platform 33

10 Specific requirements for lifting platforms in non-enclosed liftways 34
10.1 Non-enclosed liftways 34
10.2 Lifting platform 36

11 Testing, inspection and servicing 38
11.1 Test and examination after installation 38
11.2 Periodic examinations, tests and servicing 39

12 Technical literature 39

13 Labels, notices and operating instructions 40
13.1 General 40
13.2 On the platform 40
13.3 At each entrance 40
13.4 At machinery spaces 41
13.5 By the main switch 41
13.6 At the access to the underside of the platform 41
13.7 Safety gear 41
13.8 Alarm 41
13.9 Operating instructions 42

Annex A (informative) **Guidance in the selection and purchase of suitable powered lifting platforms** 54

Annex B (informative) **Recommendations for examination and testing before going into service** 56

Annex C (informative) **Recommendations for the provision and use of specially adapted operating devices, switches and sensors** 58

Annex D (informative) **In-use periodic examinations, tests and servicing** 59

Annex E (informative) **Example of certificate of acceptance by purchaser/user after initial tests and examination** 61

Annex F (normative) **Safety circuits — Requirements for circuit design and component and circuit fault analysis** 62

Annex G (informative) **Summary of different requirements for restricted/public access** 66

Bibliography 67

© ISO 2000 – All rights reserved

Foreword

ISO (the International Organization for Standardization) is a worldwide federation of national standards bodies (ISO member bodies). The work of preparing International Standards is normally carried out through ISO technical committees. Each member body interested in a subject for which a technical committee has been established has the right to be represented on that committee. International organizations, governmental and non-governmental, in liaison with ISO, also take part in the work. ISO collaborates closely with the International Electrotechnical Commission (IEC) on all matters of electrotechnical standardization.

International Standards are drafted in accordance with the rules given in the ISO/IEC Directives, Part 3.

Draft International Standards adopted by the technical committees are circulated to the member bodies for voting. Publication as an International Standard requires approval by at least 75 % of the member bodies casting a vote.

Attention is drawn to the possibility that some of the elements of this part of ISO 9386 may be the subject of patent rights. ISO shall not be held responsible for identifying any or all such patent rights.

International Standard ISO 9386-1 was prepared by Technical Committee ISO/TC 178, *Lifts, escalators, passenger conveyors*.

ISO 9386 consists of the following parts, under the general title *Power-operated lifting platforms for persons with impaired mobility — Rules for safety, dimensions and functional operation*:

— *Part 1: Vertical lifting platforms*

— *Part 2: Powered stairlifts for seated, standing and wheelchair users moving in an inclined plane*

Annex F forms a normative part of this part of ISO 9386. Annexes A, B, C, D, E and G are for information only.

Annex G is included to summarize those clauses within this part of ISO 9386 where separate requirements apply to lifting platforms installed in buildings with restricted access or alternatively in buildings with public access.

© ISO 2000 – All rights reserved

Introduction

ISO 9386 specifies the safety rules, dimensions and functioning for permanently installed power-operated lifting platforms designed for use by persons with impaired mobility. This part of ISO 9386 covers power-operated vertical lifting platforms.

The location and dimensions of controls and other parts of the stairlift installation have been chosen to meet the functional needs of disabled persons and are compatible with the guidelines set out in ISO/TR 9527.

Lifting platforms manufactured according to the requirements of this part of ISO 9386 will be capable of being operated in a normal indoor environment as regards temperature and humidity. Additional features are likely to be necessary in more rigorous conditions, or if fitted in an external situation.

It is assumed that all components of the lifting platform are kept in good repair and working order and that the specified clearances are not exceeded in spite of wear.

A lifting platform complying with the requirements of this part of ISO 9386 is intended for use only by person(s) either capable of using it safely and unaided or, if not so capable, who only uses it when adequately attended by an assistant. On installations with restricted access, it is assumed that users will be fully instructed in the operation of the lifting platform in accordance with Annex A, clause A.3. On installations with public access, it is assumed that operating instructions or assistance will be provided.

When, for the sake of clarity, mention is made of a design, this should not be considered to be the only possible design, particularly in relation to recent developments in electronics and microprocessors and their use in control and safety circuits. Any other solution leading to the same result may be applied provided that it can be demonstrated to be equivalent in operation and at least equally safe.

It is recommended that lifting platforms manufactured in accordance with this part of ISO 9386 should be subjected to independent verification of compliance through type approval.

© ISO 2000 – All rights reserved

Power-operated lifting platforms for persons with impaired mobility — Rules for safety, dimensions and functional operation —

Part 1:
Vertical lifting platforms

1 Scope

This part of ISO 9386 specifies the safety rules, dimensions and functional operation for permanently installed power-operated vertical lifting platforms intended for use by persons with impaired mobility when standing or sitting in a wheelchair, with or without an attendant.

It specifies requirements for lifting platforms

a) installed within enclosed liftways, and

b) whose design or location permits their use without an enclosed liftway.

It is restricted to the following lifting platforms:

a) those which travel between fixed levels;

b) those without liftway enclosure and without floor penetration:

   1) with travel up to 2,0 m,

   2) in private dwellings with travel up to 4,0 m;

c) those with liftway enclosure with travel up to 4,0 m;

d) those whose rated speed does not exceed 0,15 m/s;

e) those whose line of travel does not exceed 15° from the vertical and;

f) those whose rated load is not less than 250 kg.

This part of ISO 9386 does not specify every general technical requirement for all aspects of the electrical, mechanical or building construction.

As far as possible, this part of ISO 9386 specifies only the requirements that materials and equipment need to meet in the interests of safety and functional operation.

Requirements are also included for protection against harmful influences which may be experienced by equipment installed in external locations.

© ISO 2000 – All rights reserved

2 Normative references

The following normative documents contain provisions which, through reference in this text, constitute provisions of this part of ISO 9386. For dated references, subsequent amendments to, or revisions of, any of these publications do not apply. However, parties to agreements based on this part of ISO 9386 are encouraged to investigate the possibility of applying the most recent editions of the normative documents indicated below. For undated references, the latest edition of the normative document referred to applies. Members of ISO and IEC maintain registers of currently valid International Standards.

ISO 606:1994, *Short-pitch transmission precision roller chains and chainwheels*.

ISO 3864:1984, *Safety colours and safety signs.*

ISO 4190-5, *Lifts and service lifts (USA: Elevators and dumbwaiters) — Part 5: Control devices, signals and additional fittings*.

ISO 4344:1983, *Steel wire ropes for lifts*.

ISO 4413:1998, *Hydraulic fluid power — General rules relating to systems*.

ISO 7000:1989, *Graphical symbols for use on equipment — Index and synopsis*.

IEC 60204-1, *Electrical equipment of industrial machines — Part 1: General requirements*.

IEC 60335-1, *Safety of household and similar electrical appliances — Part 1: General requirements*.

IEC 60364, *Electrical installations of buildings*.

IEC 60417-2:1998, *Graphical symbols for use on equipment — Part 2: Symbol originals*.

IEC 60529:1989, *Degrees of protection provided by enclosures (IP Code)*.

IEC 60617, *Graphical symbols for diagrams*.

IEC 60664-1:1992, *Insulation coordination for equipment within low-voltage systems — Part 1: Principles, requirements and tests*.

IEC 60742:1983, *Isolating transformers and safety isolating transformers — Requirements*.

IEC 60747-5:1992, *Semiconductor devices — Discrete devices and integrated circuits — Part 5: Optoelectronic devices*.

IEC 60947-1:1999, *Low-voltage switchgear and controlgear — Part 1: General rules*.

IEC 60947-4-1:1990, *Low-voltage switchgear and controlgear — Part 4: Contactors and motor-starters — Section 1: Electrotechnical contactors and motor-starters*.

IEC 60947-5-1:1997, *Low-voltage switchgear and controlgear — Part 5: Control circuit devices and switching elements — Section 1: Electromechanical control circuit devices*.

EN 50214, *Flexible cables for lifts*.

CENELEC HD 360 S2, *Circular rubber insulated lift cables for normal use*.

3 Terms and definitions

For the purposes of this part of ISO 9386, the following terms and definitions apply.

© ISO 2000 – All rights reserved

3.1
barrier
device or an assembly arranged so as to provide protection against falling

a) to protect a landing opening when the platform is not at that landing;

b) to protect any side or sides of the platform

3.2
brake
electromechanical mechanism employed to hold the lifting platform in position and/or bring it to rest smoothly

3.3
chain
simplex or duplex transmission chain that, if used as part of a drive system, either transmits rotary motion from one shaft to another or transmits motion directly to the platform

3.4
chainwheel
wheel having machine-cut teeth specially designed to engage with a chain

3.5
competent person
person who, by virtue of specific training, is competent to assess technically the safety and function of the lifting platform

3.6
contactor
relay
electromagnetically operated device of suitable rating for switching an electrical circuit

3.7
controller
assembly of electrical contactors, relays and/or other components which control the movement of the lifting platform

3.8
direct-acting lifting platform
lifting platform in which a hydraulic jack or nut or screw is directly attached to the platform

3.9
down-direction valve
electrically controlled valve in a down-direction hydraulic circuit

3.10
drive
generic term covering the various electromechanical drive unit arrangements that cause the lifting platform to move under electrical power input

3.11
drive unit
complete assembly comprising an electric motor, brake and gearing, which supplies the tractive and braking effort controlling the movement of the lifting platform

3.12
driving nut
internally threaded annular component that acts in conjunction with a screw to produce linear motion of the platform

EXAMPLE A rotating screw engaging with a fixed nut, or *vice versa*.

© ISO 2000 – All rights reserved

3.13
driving rack
strip incorporating specially shaped teeth with which a driving pinion may engage to form a positive driving means converting rotary motion into linear motion

3.14
driving screw
externally threaded driving component that acts in conjunction with a driving nut

3.15
duty cycle
number of journeys the lifting platform is required to perform in a given period of time

3.16
enclosed liftway
liftway in which the space is fully bounded by the bottom of the pit and a solid enclosure (but not necessarily a ceiling) and/or landing doors reaching to a height above the highest position of the platform enclosure

NOTE See example in Figure 1.

3.17
final limit switch
electrical safety switch, positively and mechanically operated by the lifting platform in the event of overtravel

3.18
follow-through
amount of additional free movement provided in the actuation of an electrical switching device after the electrical contact has been broken

3.19
full-load pressure
highest hydraulic system pressure for the lifting platform carrying its rated load when at rest

3.20
guide rail
components which direct the course of the platform

3.21
guided chain
chain, which may be either fixed or moving, and which is completely guided over its entire length such that it may transmit a load either in thrust or tension

3.22
hydraulic lifting platform
lifting platform in which the lifting power is derived from an electric motor, driving a pump which transmits hydraulic fluid to a jack

3.23
journey
movement of the platform between any two levels which incorporates one start and one stop

3.24
landing
defined level to be served by the lifting platform, having adequate space to permit the manoeuvring, boarding and alighting of users with a wheelchair where appropriate

3.25
lifting platform
device permanently installed to serve fixed landing levels, comprising a guided platform whose dimensions and means of construction permit the access of disabled passenger(s), with or without wheelchair(s)

© ISO 2000 – All rights reserved

NOTE See example in Figure 1.

3.26
liftway
protected space in which the platform travels

3.27
machine space
space in which the drive unit and/or the associated equipment is placed

3.28
mechanical blocking device
device which, when set in position, guarantees a minimum safety space beneath the platform for the purposes of maintenance and inspection

3.29
non-enclosed liftway
liftway which is not enclosed

NOTE See example in Figure 1.

3.30
overspeed governor
device which, when the lifting platform attains a pre-determined speed, causes the lifting platform to stop by application of the safety gear

3.31
pinion
wheel, having machine-cut teeth specially designed to engage with those of other similar toothed wheels or racks, used to transmit relative motion

3.32
platform
flat and substantially horizontal structure that is part of a lifting platform that supports a user or users

3.33
pressure-relief valve
valve which limits fluid pressure to a stated value by exhausting fluid

3.34
rack
bar with specially shaped teeth with which a pinion may engage and which forms a positive driving means to convert rotary motion into linear motion

3.35
rated load
load for which the equipment has been built and for which safe operation is guaranteed by the supplier

3.36
rated speed
nominal speed of the lifting platform as agreed in the contract for the particular installation

3.37
restricted access
access which is restricted to a known user or users

© ISO 2000 – All rights reserved

3.38
rupture valve
valve designed to close automatically when the fluid pressure drop across the valve, caused by increased flow in a predetermined flow direction, exceeds a predetermined amount

3.39
safety circuit
electrical or electronic circuit which has been subjected to failure analysis to confirm an equivalent degree of safety to a safety contact

3.40
safety contact
contact in which the separation of the circuit-breaking elements is made by positive means

3.41
safety factor
ratio, for a particular material under static or dynamic conditions (as defined in the text), of the yield load or the ultimate tensile load (as defined in the text) to the load that can be imposed upon a member by the rated load

3.42
safety gear
mechanical device for stopping and maintaining the platform stationary on the guides in the event of overspeeding in the downward direction or breaking of the suspension

3.43
safety nut
internally threaded annular component, used in conjunction with a screw/nut drive, so arranged that it does not normally carry the load but is capable of doing so in the event of failure of the threads in the main driving nut

3.44
safety switch
electrical switch incorporating one or more safety contacts

3.45
self-sustaining drive system
drive system that, under free running conditions with the brake lifted, will not permit the lifting platform to increase in speed

NOTE The system will not permit the lifting platform to start moving from a standstill with the brake lifted. All other systems are non-self-sustaining.

3.46
sensitive edge
safety device attached to any edge of the platform to provide protection against a trapping, shearing or crushing hazard

3.47
sensitive surface
safety device similar in effect to a sensitive edge but so arranged as to protect a whole surface such as the underside of the platform or other large area

3.48
slack rope
chain switch
switch or combination of switches, arranged to stop the lifting platform if any suspension rope or chain slackens by a pre-determined amount

3.49
terminal switch
switch, or combination of switches, arranged to bring the lifting platform to rest automatically at or near the landing

© ISO 2000 – All rights reserved

3.50
toe guard
smooth vertical component extending downwards from the sill of the landing or platform entrance

3.51
toothed belt
flexible continuous belt, having teeth formed in one or other of its surfaces, and designed to engage with specially cut or moulded teeth in wheels attached to separate shafts in order to provide a drive between the two

3.52
travel
distance between the highest and lowest levels served

3.53
unlocking zone
zone, extending above and below a landing, in which the platform floor must be positioned to enable the appropriate landing door, ramp or barrier to be unlocked

3.54
user
person(s) for whom the lifting platform is installed or designed

4 General requirements for lifting platforms

4.1 Pattern of use

The design of the lifting platform shall take account of the frequency of usage to which it will be subjected.

4.2 Protection against hazards

Protection so as to minimize the risk of all of the following hazards shall be incorporated:

a) shearing, crushing, trapping or abrading;

b) entanglement;

c) falling and tripping;

d) physical shock and impact;

e) electric shock;

f) fire, attributable to use of the lifting platform.

4.3 General design

Components shall be of sound mechanical and electrical construction, using materials that are free from obvious defects and that are of adequate strength and suitable quality. It shall be ensured that the dimensions specified in this part of ISO 9386 are maintained, despite wear. Consideration shall also be given to the need for protection against the effects of corrosion. The transmission of noise and vibration to any surrounding walls and other supporting structures shall be minimized. All materials shall be asbestos free.

4.4 Design guidelines particular to the installation

Ensure that design requirements particular to the installation or the user are taken into account.

4.5 Access for maintenance, repair and inspection

Lifting platforms shall be designed, constructed and installed so that components requiring periodic inspection, testing, maintenance or repair shall be easily accessible.

© ISO 2000 – All rights reserved

4.6 Fire resistance

Materials used in the construction of the lifting platform shall not support combustion, neither shall they be dangerous through the toxic nature and quantity of gas and fumes they may generate in a fire situation.

Plastic components and electrical wiring insulation shall be flame retardant and self-extinguishing.

4.7 Rated speed

The rated speed of the lifting platform in the direction of travel shall not be greater than 0,15 m/s.

4.8 Rated load

The rated load shall be not less than 250 kg. The design of the platform shall be based on a load of not less than 210 kg/m^2 of the clear floor area.

4.9 General safety factor

Unless stated otherwise in this part of ISO 9386, the safety factor for all parts of the equipment shall not be less than 1,6 based on yield load and the maximum dynamic load. This safety factor is based on steel or equivalent ductile materials. Increased safety factors shall be considered for other materials.

4.10 Resistance to operating forces

4.10.1 The complete lifting platform installation shall resist, without permanent deformation, the forces imposed on it during normal operation, during the application of the safety devices and at impact on mechanical stops when travelling at the rated speed. However, local deformation that does not affect the operation of the lifting platform arising from the safety gear gripping device is permissible.

4.10.2 Guiding components, their attachments and joints shall withstand deflections due to uneven loading without affecting normal operation.

4.11 Protection of equipment against harmful external influences

4.11.1 General

Mechanical and electrical components shall be protected from the harmful and hazardous effects of external influences that will be encountered at the proposed installation site, for example:

a) the ingress of water and solid bodies;

b) the effects of humidity, temperature, corrosion, atmospheric pollution, solar radiation, etc.;

c) the actions of flora, fauna, etc.

4.11.2 Protection

The protection shall be designed and constructed and the lifting platform shall be installed in such a manner that the influences mentioned above do not prevent the lifting platform from operating safely and reliably.

It shall not be possible for moisture to accumulate on the liftway floor.

4.11.3 Degree of protection for outdoor use

For outdoor use, lifting platforms shall have a degree of protection for electrical equipment which is not less than IP 4X as defined in IEC 60529:1989.

© ISO 2000 – All rights reserved

NOTE Guidance on the construction of equipment, selection of enclosures, selection and treatment of materials, electrical insulating materials, sealing techniques, etc., should be obtained by reference to relevant National and International Standards.

The degree of protection shall be increased as necessary appropriate to the location and operating conditions (see 8.5.1).

4.12 Suppression of radio and television interference

The design of the electric motor, contact devices and control devices shall comply with legal requirements for the suppression of electromagnetic interference. However, components necessary to give an adequate degree of suppression shall not be used in any part of a circuit where failure might cause an unsafe condition.

4.13 Guarding

Components (e.g. gearing and the drive unit) shall be guarded so far as is possible to prevent risk of personal injury. Where necessary, guards shall be of imperforate material. Access panels shall be secured by means requiring the use of a tool or key for their release. See also 7.4.5, 7.5.3 and 7.7.4.

5 Guide rails, mechanical stops and mechanical blocking device

5.1 Guide rails

5.1.1 Guide rail(s) shall be provided to retain and guide the platform throughout its travel. For lifting platforms in enclosed liftways, the guide rails shall ensure that the horizontal clearances between the inner surface of the liftway enclosure and platform components (as shown in Figures 2 and 10) are maintained throughout the entire travel of the platform.

5.1.2 Guide rails shall be made of metal.

5.2 Mechanical stops and mechanical blocking device

5.2.1 Mechanical end stops shall be fitted if it is possible for the lifting platform to be driven beyond the extremes of travel.

5.2.2 If a clear space of 500 mm minimum is not available under the platform when at its lowest position, a manually positioned mechanical blocking device or other equally effective means shall be provided to enable the platform to be held mechanically in a raised position (see 9.1.1.1.2).

In this case, the mechanical blocking device shall be operated from the outside and shall be provided with an electric switch that detects the operation of the mechanical blocking and disables the operation of the platform.

These devices shall be capable of supporting the platform bearing its rated load and shall be clearly marked with their intended purpose and position for effective use.

The value of 500 mm is a minimum. Where possible, increased clearance up to 900 mm should be provided.

6 Safety gear and overspeed governor

6.1 General

6.1.1 The lifting platform shall be provided with a safety gear. The safety gear shall operate to stop and sustain the platform with the rated load taking into account associated shock loads.

There are four exceptions to this requirement as follows:

© ISO 2000 – All rights reserved

a) direct-acting hydraulic jack drives do not require a safety gear (see 7.14.6);

b) when the lifting platform is driven by worm/segment drive;

c) when the platform is driven by a self-sustaining rotating screw or nut (see 6.8 and 7.7.5);

d) other drives provided that (see 8.6):

— the failure of a single drive component, excluding the rope or chain suspension, cannot cause the platform to overspeed in the downward direction,

— the failure would cause the platform to stop by operating a safety switch conforming to 8.7.4 or other equivalent means.

NOTE It is considered in b) that the multiple segments inherent in this drive system provide an equivalent level of safety to one safety nut and switch.

6.1.2 The safety gear shall be fitted on the platform, except on lifting platforms driven by guided rope and ball drive, where the safety gear may be fitted remote from the platform, provided the requirements of 7.8 are fulfilled.

6.1.3 When the safety gear is applied, no decrease in the tension of any rope or chain or other mechanism used for applying the safety gear or motion of the platform in the downward direction shall release the safety gear.

6.1.4 The safety gear shall be capable of stopping and sustaining the platform, carrying its rated load, within a distance of 150 mm from where the safety gear is engaged.

6.1.5 The safety gear shall be designed to grip the guide rail, or equivalent element, securely. The gripping means shall be progressive such as is provided by a cam profile or equivalent mechanism.

6.1.6 Any shaft, jaw, wedge or support that forms part of the safety gear and that is stressed during its operation shall be made of metal or other ductile material.

6.1.7 The application of the safety gear shall not cause the platform to change inclination by more than 5°.

6.2 Control

The safety gear shall be mechanically tripped by an overspeed governor before the platform exceeds a speed of 0,3 m/s, except on indirectly suspended hydraulic lifts where the safety gear may be tripped by a safety rope which is independent of the means of suspension or by slackening or breaking of a suspension rope or chain.

6.3 Release

Release of the safety gear shall only be possible by raising the platform. After its release, the safety gear shall remain functional for further use.

Operating instructions shall include advice that the safety gear shall only be released and re-set by a competent person.

6.4 Access for inspection

The safety gear shall be easily accessible for inspection and testing.

6.5 Electrical checking

When the safety gear is engaged, an electrical device conforming to 8.6 and activated by the safety gear shall immediately initiate stopping and shall prevent the starting of the machine.

© ISO 2000 – All rights reserved

6.6 Overspeed governor

If the overspeed governor derives its drive from a main suspension chain or rope, the safety gear shall be operated by a mechanism actuated by breaking, or slackening of, the means of suspension.

Any friction drive to the overspeed governor shall be independent of the main friction drive on friction-drive lifting platforms.

6.7 Rotation monitor unit

If the overspeed governor is friction driven, the control system shall include circuitry to monitor rotation of the overspeed governor driving means during travel. If rotation ceases, the supply to the driving motor and brake shall be interrupted within 10 s or 1 m of travel.

Correct function shall be checked at least once during normal travel.

The force transmitted to the rotating device by friction shall be at least twice the force necessary to trip the safety gear.

6.8 Safety nut

In the case of the screw and nut type of drives, a second unloaded safety nut shall be provided to carry the load and operate a safety contact in the event of failure of the driving nut such as to afford an equivalent degree of safety to that specified in 6.1. The safety contact shall operate to cause power to be removed from the motor and brake in the event of failure of the driving nut.

Consideration shall be given to the need for protection to the safety contact against the effects of pollution and vibration.

7 Driving units and drive systems

7.1 General requirements

NOTE ISO 9085-1 gives guidance concerning the calculation of load capacity of spur and helical gears.

7.1.1 The selected drive method shall be in accordance with one of the systems specified in 7.4 to 7.14.

Other drive methods may be used, provided they achieve an equivalent degree of safety.

7.1.2 All types of drive except hydraulic shall be powered in both directions of travel.

7.1.3 Safety factors used in the design of geared drive units shall be maintained, even after taking full account of the effects of wear and fatigue likely to arise during the designed life of the geared drive system.

Unless forming an integral part of its shaft or driving unit every sheave, rope drum, spur gear, worm and worm wheel or brake drum shall be fixed to its shaft or other driving unit by one of the following methods:

a) sunk keys;

b) splines;

c) cross pinning;

Other methods may be used, provided they achieve an equivalent degree of safety as a), b) and c) above.

Gearing shall be guarded so far as is possible. Any such guards shall be of imperforate material.

© ISO 2000 – All rights reserved

7.1.4 If chain or belt intermediate drives are employed within the drive system, then one of the following conditions shall be met:

a) the output drive gearing shall be on the load side of the chain or belt intermediate drive, and either

b) the output drive gearing shall be self-sustaining, or

c) the brake shall be on the load side of the chain or belt intermediate drive and a minimum of two belts shall be used. The chain or belt intermediate drive shall be monitored by a safety contact that shall disconnect the supply to the motor and brake in the event of breakage of any chain or belt. If V belts are used, monitoring shall also detect the slackening of any one belt.

7.1.5 Rope-suspension or chain-suspension systems shall incorporate a device that, in the event of a slack rope or chain, shall operate a safety contact that shall initiate a break in the electrical supply to the motor and brake and thus prevent any movement of the platform until the rope or chain is correctly re-tensioned.

7.2 Braking system

7.2.1 General

An electromechanical friction brake shall be fitted (except on hydraulically driven lifting platforms which conform to 7.14) which shall be capable of bringing the lifting platform smoothly to rest within a distance of 20 mm and holding it firmly in position under maximum rated load. The brake shall be mechanically applied and electrically held off. The brake shall not be released in normal operation unless the electrical supply is simultaneously applied to the lifting platform motor. Interruption of the electrical supply to the brake shall be controlled in accordance with 8.3.

7.2.2 Electromechanical brake

The component on which the brake operates shall be positively coupled to the final driving element (e.g. rope drum, chainwheel, screw, nut, etc.) unless the final driving element is self-sustaining.

Brake linings shall be of flame-retardant, self-extinguishing material and shall be so secured that normal wear will not weaken their fastenings.

No earth fault or residual magnetism shall prevent the brake from being applied when the electrical supply to the driving motor is interrupted.

Any brake capable of being released by hand shall require constant effort to keep the brake held off.

If one or more coil springs are used to apply the brake shoes, such springs shall be in compression and adequately supported.

7.2.3 Stopping conditions

The control and braking system shall automatically stop the platform within ± 15 mm of each landing level.

7.3 Emergency/manual operation

7.3.1 An emergency operating device shall be provided.

Where emergency operation is achieved by means of a manually operated hand-winding device, the hand-winding unit shall be operated by a smooth spokeless wheel. Alternatively, a standby power supply or device may be used for motorized operation. The standby power supply shall be capable of bringing the platform with rated load to a landing. Where necessary for reasons of safety, a safety contact shall provide protection against inadvertent operation of the normal controls when under emergency operation.

© ISO 2000 – All rights reserved

Instructions for emergency/manual operation shall be prominently displayed and shall state that the lifting platform must be switched off and the platform kept under constant surveillance when subject to emergency operation.

Where the resisting torque of the brake is too great to be overcome by emergency hand-winding, there shall be provided means of releasing the brake. Uncontrolled free-fall conditions shall not be possible under any circumstances. A device which could be left in a locked position shall not be used to hold off the brake.

A direction label in accordance with 13.4.2 shall be provided.

7.3.2 If the platform is designed to be normally operated by hydraulic means, a self-resetting manually operated lowering valve shall be provided to allow the platform to be moved at a speed no greater than the rated speed. The operation of this valve shall require a continual manual effort.

In the case of indirect-acting hydraulically driven lifting platforms where slack rope or chain can occur, manual operation shall not cause an opening of this valve when the pressure is below the minimum operating pressure.

A hand-pump which causes the platform to move in the upwards direction shall be permanently installed for every lifting platform whose platform is fitted with a safety gear or a clamping device.

The hand-pump shall be connected to the circuit between the non-return valve or down direction valve(s) and the shut-off valve.

The hand-pump shall be equipped with a pressure relief valve limiting the pressure to 2,3 times the full load pressure.

7.4 Additional requirements for rope suspension drive

7.4.1 Ropes

All rope(s) shall comply with ISO 4344. The safety factor of the ropes shall be not less than 12. The safety factor shall be the ratio between the minimum breaking load (N) of the rope and the continuous load imposed by raising the fully loaded carriage. Test certificates for the rope(s) shall be retained on file by the manufacturer and provided upon request. The ends of the ropes shall be fixed to the carriage, counterweight or suspension points by such methods as metal or resin-filled sockets, self-tightening wedge-type sockets, heart thimbles with at least three suitable rope grips or hand-spliced ferrule-secured eyes.

The minimum rope diameter shall be 5 mm.

The safety factor of rope anchorages shall be not less than 10.

A minimum of two ropes shall be fitted on all rope suspended lifting platforms. Note that this requirement does not apply to lifting platforms with guided rope and ball drive fitted with an arresting device and support system (see 7.8).

Means shall be provided to equalize the tension of the ropes.

Rope traction drive is not permitted.

7.4.2 Winding drums

Winding drums shall be provided with grooves for the suspension ropes. The grooves shall be smoothly finished with rounded edges. Plain winding drums are not permitted. The bottom of the rope groove shall be a circular arc over an angle of not less than 120°. The radius of the grooving shall be not less than 5 % in excess of, and not more than 7,5 % in excess of, the nominal radius of the suspension rope. The grooves shall be pitched so that there is adequate clearance between adjacent turns of rope on the drum and also between any part of rope leading onto the drum and the adjacent turn. Drum grooves shall have a depth not less than one-third of the nominal diameter of the rope. Only one layer of rope shall be wound on the drum.

The diameter of the drum shall not be less than 21 times the nominal diameter of the rope measured at the bottom of the rope groove. There shall be not less than 1,5 dead turns of rope on the drum when the platform is at its lowest point.

© ISO 2000 – All rights reserved

The drum flanges shall project radially by no less than two rope diameters beyond the rope pitch circle diameter.

Winding drums shall be fixed to the driving unit shaft in accordance with 7.1.3.

7.4.3 Pulleys

Pulleys shall include additional security to retain the rope in case of wear and ageing. The grooves shall be smoothly finished with rounded edges. The bottom of the groove shall have the same profile as for drum grooving, but the depth of the groove shall be not less than 1,5 times the nominal diameter of the rope. The angle of flare of the sides of pulley grooves shall be approximately 50°.

The diameter of pulleys, measured at the bottom of the groove, shall be not less than 21 times the nominal rope diameter.

7.4.4 Angle of deflection

The maximum angle of deflection (fleet angle) in relation to the grooves shall not exceed 4°.

7.4.5 Retaining of the rope

Drums, and if necessary pulleys, shall be guarded so as to ensure that the rope is retained in the grooving under all circumstances and to ensure that trapping between rope and drum or pulley cannot occur. Ropes shall also be guarded if their position is such as to create a hazard.

7.5 Additional requirements for rack and pinion drive

NOTE In order that full advantage may be taken of the safety potential of this type of drive, particular care should be taken in the design of the gearing from the motor to the driving pinion and, in particular, to the strength of the output shaft.

7.5.1 Driving pinion

The driving pinion shall be made from metal and shall be designed to resist wear. The safety factor used in the design of any driving pinion shall be maintained, even after taking full account of the effects of dynamic loading, wear and fatigue likely to arise during the designed life of the driving pinion and associated components. Undercutting of the gear teeth shall be avoided by using an adequate number of teeth. The pinion shall be fixed to the output shaft in accordance with 7.1.3.

7.5.2 Driving rack(s)

Rack(s) shall be made from metal having properties matching those of the pinion in wear and impact strength and shall possess an equivalent safety factor.

The rack(s) shall be securely attached to the rail(s) particularly at their ends, and means shall be provided to maintain the pinion and rack constantly in positive mesh under all conditions of load. Any joints in the rack shall be accurately aligned to avoid faulty meshing or damage to teeth.

7.5.3 Guarding

Guards shall be fitted to minimize trapping hazards between the rack and pinion and any other part (see 4.13).

7.6 Additional requirements for chain suspension drive

NOTE Chain drive systems that are both fixed and guided may be regarded as rack and pinion drive systems.

7.6.1 Chainwheels

All driving chainwheels shall be made from metal and have a minimum of 16 machine-cut teeth. A minimum of 8 teeth shall be engaged. The minimum angle of engagement shall be 140°. Driving chainwheels shall be fixed to the drive shaft in accordance with 7.1.3.

© ISO 2000 – All rights reserved

7.6.2 Chains

All chains shall comply with the requirements of ISO 606. The safety factor of the chain(s) shall be not less than 10 based on ultimate tensile strength. The safety factor shall be the ratio between the minimum breaking load (N) of any chain and the continuous load imposed in raising the fully loaded platform. Test certificates for the chain(s) shall be retained on file by the manufacturer and provided upon request (see annex B).

The strength of connecting links and chain anchorages shall be not less than that of the chain.

A minimum of two suspension chains shall be used and means shall be provided to equalize their tensions.

Terminal and intermediate chain connections shall be positive and secure against misconnection.

7.6.3 Protection and guarding

Means shall be provided to avoid jamming owing to misfeeding or slackening of the chains and to prevent the chains from leaving the chainwheels or riding over the teeth of the chainwheels.

Guards shall be fitted to prevent trapping hazards between chainwheel and chain or chain and any other part.

7.7 Additional requirements for screw and nut drive

7.7.1 Driving screw

The driving screw shall be made from metal with an adequate impact strength. It shall be designed to resist wear and shall have a safety factor of not less than 6 based on ultimate tensile strength and dynamic load, except if the screw is subjected to a compressive load when a minimum factor of safety of 3 against buckling shall apply.

NOTE Rotating screws require particular care to ensure the factor of safety against buckling is maintained.

7.7.2 Driving nut

The driving nut shall be made from a metal compatible with the screw with respect to wear and impact strength and shall possess an equivalent safety factor. A low-friction coating of plastic or similar material is permissible.

7.7.3 Screw/nut assembly

The drive to the rotating component shall be directly controlled by a brake. However, chain or belt intermediate drives are permitted if the requirements of 7.1.4 are fulfilled. The rotating component shall be restrained against axial or radial movement by means of adequately supported bearings.

7.7.4 Guarding

Means shall be provided to guard effectively all moving parts and to prevent the fouling of the screw threads with dirt or other foreign matter.

7.7.5 Safety nut

On self-sustaining screw and nut drives, a safety nut may be used in place of a safety gear [see 6.1.1.c) and 6.8]. In this case, the safety nut shall possess a safety factor equivalent to that of the driving nut.

7.8 Additional requirements for guided rope and ball drive

One rope may be used in such systems if the arrangement is combined with an arresting device and support system.

The safety factor of the lifting rope shall be not less than 12. The safety factor shall be the ratio between the minimum breaking load of the rope and the load imposed on the rope at the driving wheel when raising the fully loaded carriage at maximum angle, taking into account friction from the support balls.

© ISO 2000 – All rights reserved

The load-bearing balls shall be fastened on the rope in such a way that the 12 times factor of safety as above is achieved by the number of balls that lie on the gear wheel at the same time.

The rope attachments shall have a minimum factor of safety of 10 based on ultimate tensile strength.

7.9 Additional requirements for worm-toothed segment drive

7.9.1 The toothed segments shall be of metal, possibly with lining, and so dimensioned that the safety factor against breakage is at least 6 based on ultimate tensile strength at the intended maximum allowed static load. Adjacent segments shall always overlap each other.

7.9.2 The lifting worm shall be made of metal. The material of the worm shall be more resistant against wear than the material of the toothed segments. The worm shall be dimensioned so that the maximum static load on each loaded screw thread does not exceed 1/6 of the allowable breaking load. At least two threads shall always be in engagement simultaneously.

7.9.3 Radial movement of the worm shall be restricted so that worm/segment engagement shall be not less than 2/3 of the nominal. The worm shall be securely located against displacement, even in the event of failure of the main driving shaft.

7.9.4 If the drive is not self-sustaining, the platform shall be fitted with a safety gear and overspeed governor.

7.10 Additional requirements for friction/traction drive

7.10.1 The traction between the traction wheels and the track shall be proved by calculations and test at the rated load plus 25 %. It should be confirmed that this will be achieved, even after the effects of wear during normal service. The traction wheels shall adjust automatically to ensure that the traction grip is maintained, even despite the effects of wear (see also 6.6).

7.10.2 The traction wheels shall be made of metal, except that the running surface may consist of a tyre of other material, provided wear or failure of this does not reduce the traction grip below the specified minimum.

7.11 Additional requirements for guided chain drive

7.11.1 A guided chain drive with a fixed chain shall be regarded as a rack and pinion drive system.

7.11.2 A guided chain drive with a movable chain shall be regarded as a chain suspension drive system, calculated in conformity with 7.6, except that if the safety gear acts on the chain and if the chain is solidly guided so as to provide a support between the carriage and the point of operation of the safety gear then, in the event of chain breakage, the chain and its guides shall be regarded as a supported drive system. When the chain is acting as a supporting system, a minimum safety factor of 3 against buckling shall apply for the supporting chain and its guides.

7.12 Additional requirements for guided chain drive with bearing rollers and bearing segments

7.12.1 The complete suspension means consisting of the guided chain, the bearing rollers, the bearing segments and their fixings shall have a minimum factor of safety of 6 based on ultimate tensile strength, except that the guided chain shall have a minimum factor of safety of 10.

7.12.2 There shall be a minimum of two bearing rollers and two bearing segments in engagement and the loading shall be shared equally.

7.13 Additional requirements for scissor mechanism drive

When the lifting platform is elevated by a scissor mechanism, the connection between the platform and the mechanism shall be positive whilst permitting the necessary lateral movement of the linkage and preventing inadvertent tilting of the platform.

© ISO 2000 – All rights reserved

7.14 Additional requirements for hydraulic drive

NOTE Guidance and recommendations for the design of reliable and safe hydraulic systems are given in ISO 4413. Graphical and circuit symbols to be used on hydraulic circuit diagrams are given in ISO 1219-1.

7.14.1 Pressures

7.14.1.1 For the calculation of stresses in components such as valves, jacks and pipes (excluding flexible hoses), the following shall be taken into account:

a) maximum static hydraulic full-load pressure;

b) minimum safety factor of 1,7 referred to the proof stress of the materials;

c) minimum safety factor of 2,3 for friction losses and pressure peaks.

7.14.1.2 For the calculation of compressive stresses in jacks at their fully extended position, the following shall be taken into account:

a) maximum pressure equal to 140 % of the full load pressure;

b) minimum safety factor of 2,3.

7.14.2 Jacks

Grey cast-iron or other brittle materials shall not be used in the construction of jacks and their associated connecting links.

The jacks shall be so mounted that they are subjected to axial loads only. They shall be provided with stops at the limit of their stroke or with equally effective means to prevent the piston rod from travelling beyond the limits of the jack.

7.14.3 Flexible hoses

The flexible hose between the cylinder and non-return valve or the down-direction valve shall be selected with a safety factor of at least 8 relating to full pressure and bursting pressure.

The flexible hose and its couplings between the cylinder and non-return valve or the down-direction valve shall withstand without damage a pressure of at least five times full-load pressure. This test shall be carried out by the manufacturer of the hose assembly.

The flexible hose should be marked in an indelible manner with

a) the name of the manufacturer or the trade mark,

b) the test pressure, and

c) the date of the test.

The flexible hose shall be fitted with a bending radius not less than that indicated by the hose manufacturer.

7.14.4 Shut-off valve

A shut-off valve shall be provided. It shall be installed in the circuit which connects the cylinder(s) to the non-return valve and the down-direction valve(s).

© ISO 2000 – All rights reserved

7.14.5 Non-return valve

A non-return valve shall be provided. It shall be installed in the circuit between the pump(s) and the shut-off valve.

The non-return valve shall be capable of holding the platform with the rated load at any point when the supply pressure drops below the minimum operating pressure.

The closing of the non-return valve shall be effected by the hydraulic pressure from the jack and by at least one guided compression spring and/or by gravity.

7.14.6 Pressure-relief valve

A pressure-relief valve shall be provided. It shall be connected to the circuit between the pump(s) and the non-return valve. The hydraulic fluid shall be returned to the tank.

The pressure-relief valve shall be adjusted to limit the pressure to 140 % of the full pressure.

7.14.7 Down-direction valves

Down-direction valves shall be held open electrically. Their closing shall be effected by the hydraulic pressure from the jack and by at least one guided compression spring per valve.

7.14.8 Protection against hydraulic system failure

7.14.8.1 Rupture valve

When the platform travel is greater than 500 mm or three steps, the hydraulic system shall include a rupture valve fitted directly to the cylinder outlet, or other effective device, which in the event of failure in any part of the hydraulic circuit (excluding the jack) shall arrest the descent of the platform.

The rupture valve shall be

— integral with the cylinder, or

— directly and rigidly flange-mounted, or

— placed close to the cylinder and connected to it by means of short rigid pipes, having welded, flanged or threaded connections, or

— connected directly to the cylinder by threading.

The rupture valve shall be provided with a thread ending with a shoulder. The shoulder shall butt up against the cylinder.

Other types of connections, such as compression fittings or flared fittings, are not permitted between the cylinder and the rupture valve.

7.14.8.2 Restrictor

In the case of major leakage in the hydraulic system, a restrictor shall prevent the speed of the platform with rated load in a downward movement exceeding the rated speed downwards by more than 0,15 m/s.

The restrictor shall be accessible for inspection.

The restrictor shall be

a) integral with the cylinder, or

© ISO 2000 – All rights reserved

b) directly and rigidly flange mounted, or

c) placed close to the cylinder and connected to it by means of short rigid pipes having welded, flanges or threaded connection, or

d) connected directly to the cylinder threading.

The restrictor shall be provided with a thread ending with a shoulder. This shall butt up against the cylinder.

Other types of connections such as compression fittings or flared fittings are not permitted between the cylinder and the restrictor.

The restrictor shall be calculated as the cylinder.

There shall be a manually operated device allowing the tripping flow of the restrictor to be reached without overloading the platform. The device shall be safeguarded against unintentional operation. In no case shall it neutralize the safety devices adjacent to the jack.

7.14.9 Protection against creeping

Protection against creeping shall be provided on lifting platforms with hydraulic drive whose travel exceeds 500 mm.

Examples of methods by which this may be achieved are as follows:

— electric anti-creep system;

— pawl device;

— tripping of the safety gear or a clamping device by downward movement of the lifting platform.

The lifting platform shall be prevented from creeping more than 50 mm below floor level.

7.14.10 Pressure gauge

Provision shall be made in the hydraulic circuit between the non-return valve and the jack for a pressure gauge and isolation valve to be fitted for test purposes.

7.14.11 Filters

Filters or similar devices shall be installed in the circuit between the tank and the pump(s), and in the circuit between the shut-off valve and the down-direction valve. The filter and similar device between the shut-off valve and the down-direction valve shall be accessible for inspection and maintenance.

7.14.12 Reservoir

The oil reservoir shall be of closed construction and shall incorporate a covered filler, a breather, a means for determining the fluid level, and a filter or similar device.

7.14.13 Piping and supports

All piping shall be supported in accordance with ISO 4413 to eliminate undue stress at joints, bends and fittings, and particularly at any section of the hydraulic system subject to vibration.

Rigid pipes and flexible hoses shall be protected by means of ferrules where they pass through walls, floors, panels or bulkheads.

© ISO 2000 – All rights reserved

Couplings shall not be located within ferrules.

7.14.14 Flexible hoses

Flexible hoses shall be installed in such a manner that:

a) sharp flexing and straining of the hose during operation of the lifting platform is avoided;

b) the torsional deflection of the hose is minimized;

c) the hose is located or protected to avoid damage; and

d) the hose is adequately supported or has vertical termination if the weight of the hose could cause undue strain.

The hoses shall be compatible with the hydraulic fluid used in the system and shall be permanently marked with their maximum working pressure (see 7.14.3.1).

7.14.15 Manual/emergency operation

The requirements of 7.3.2 shall apply.

8 Electrical installation and equipment

8.1 General

8.1.1 Lifting platforms shall be connected to a dedicated power supply conforming to the relevant part of IEC 60364 terminating at a main switch and fuse or overload device. The requirement for the supply to be dedicated does not apply to battery-operated lifting platforms.

The main switch shall not interrupt the circuits supplying

a) any lighting associated with the lifting platform (see 8.1.6.1), or

b) the power socket outlet provided for maintenance purposes (see 8.1.6.2).

NOTE 1 National requirements for electrical distribution circuits cease to be applicable at the inlet terminals of the main switch referred to above.

NOTE 2 National interpretation of “dedicated power supply” is permissible.

8.1.2 The electrical installation and equipment shall comply with the requirements of either IEC 60204-1 or IEC 60335-1 as appropriate.

The nominal main d.c. voltage or the a.c. voltage between conductors and between conductors and earth shall not exceed 250 V for control and safety circuits. Mains-supplied control circuits, other than line-to-earth neutral supplies, shall be derived from the secondary winding of an isolating transformer complying with IEC 60742. One line of the control circuit shall be earthed (or grounded on isolated circuits) and the other line shall be fused in accordance with Figure 4. SELV-protected circuits in accordance with the relevant part of IEC 60364 may be considered as an alternative, provided an equivalent level of safety can be assured. Equivalent requirements for battery-powered lifting platforms are given in 8.12.

8.1.3 The operating voltage of the drive unit shall not be greater than 500 V.

8.1.4 The neutral conductor and any circuit-protective conductor shall be separate.

8.1.5 The resistance of the insulation between conductors and between conductors and earth shall be greater than 1 000 Ω/V with a minimum of

© ISO 2000 – All rights reserved

a) 500 kΩ for power circuits and circuits containing electrical safety devices;

b) 250 kΩ for other circuits.

8.2 Lighting and socket outlets

8.2.1 Lighting

The lighting at the floor of the platform and at the platform control devices shall be controlled by a switch adjacent to the lifting platform. The level of illumination shall be not less than 50 lx as measured at the floor.

Totally enclosed lifting platforms shall be fitted with an automatically rechargeable emergency supply which is capable of feeding at least a 1 W lamp for one hour in the case of an interruption of the normal lighting supply. This lighting shall come on automatically upon failure of the normal lighting supply.

8.2.2 Socket outlet

An electrical output socket shall be provided adjacent to the lifting platform for local lighting during inspection and servicing.

8.3 Drive contactors

8.3.1 Main contactors (as required in 8.4) shall be to a minimum specification of

a) utilisation category AC-3 for contactors for a.c. motors, and

b) utilisation category DC-3 for contactors for d.c. motors,

as specified in IEC 60947-4-1:1990.

8.3.2 If, because of the power they carry, relays must be used to operate the main contactors, those relays shall belong to the following categories as specified in IEC 60947-5-1:1997:

a) AC 15 for relays controlling a.c. contactors;

b) DC 13 for relays controlling d.c. contactors.

8.3.3 Each contactor specified in 8.3.1 and 8.3.2 shall operate such that:

a) if one of the “break” contacts (i.e. normally closed) is closed, then all the “make” contacts are open; and

b) if one of the “make” contacts (i.e. normally open) is closed, all the break contacts are open.

These conditions shall be maintained even if one of the contacts becomes welded together.

8.3.4 Contactors for reversing the direction of travel shall be electrically interlocked.

8.4 Motor and brake circuits for stopping the machine and checking its stopped condition

8.4.1 Motors supplied directly from a.c. mains

The supply to the motor and brake shall be interrupted by two independent contactors, the contacts of which shall be in series in the motor and brake supply circuits. If, whilst the lifting platform is stationary, one of the contactors has not opened the main contacts, further movement of the lifting platform shall be prevented at the latest at the next change in the direction of motion.

© ISO 2000 – All rights reserved

8.4.2 A.c. or d.c. motors controlled and supplied by solid-state elements

One of the following methods shall be used:

a) as 8.4.1; or

b) a system consisting of:

— a contactor interrupting the current at all poles; the coil of the contactor shall be released at least before each change in direction; if the contactor does not release, any further movement of the lifting platform shall be prevented;

— an independent control device blocking the flow of energy in the static elements;

— a monitoring device to verify the blocking of the flow of energy each time the lifting platform is stationary.

If, during a normal stopping period, the blocking by the static elements is not effective, the monitoring device shall cause the contactor to release and any further movement of the lifting platform shall be prevented.

8.4.3 Electrical supply to the drive motor and brake

This shall be interrupted following the termination of a direction control signal or following the failure of the electrical supply or upon the operation of any safety contact.

Stopping distances shall be no greater than:

— 20 mm in response to operation of a safety contact or safety circuit;

— 50 mm in response to termination of a directional signal or following the failure of the electrical supply.

8.5 Creepage and clearance distances and enclosure requirements

8.5.1 Enclosure requirements

The live parts of controllers and safety contacts shall be located within a protective enclosure of at least IP2X.

Covers shall be retained by clamping devices requiring the use of a tool for their removal. Consideration shall be given to the need for additional security by the use of a fixing or lock requiring a key or special tools on lifting platforms with public access.

Where necessary (e.g. for outdoor use), an increased degree of protection shall be provided appropriate to the location and operating conditions.

8.5.2 Creepage and clearance distances

Creepage and clearance distances for power circuits, safety circuits and any components connected after safety circuits or safety contacts and whose failure would cause an unsafe condition shall conform to the requirements of IEC 60947-1:1999, Table XV, in accordance with the working voltage and sublause 3.2 of IEC 60947-1:1999, minimum pollution degree 2. Printed wiring material column shall not be used.

8.6 Protection against electrical faults

8.6.1 Any one of the faults listed below, occurring in the electrical equipment of the lifting platform, shall not, on its own, be the cause of dangerous malfunction of the lifting platform:

a) absence of voltage;

© ISO 2000 – All rights reserved

b) voltage drop;

c) phase reversal on multiphase supplies;

d) insulation fault between an electrical circuit and metalwork or earth;

e) short circuit or open circuit, change of value or function in an electrical component such as, for example, resistor, capacitor, transistor or lamp;

f) non-attraction, or incomplete attraction, of the moving armature of a contactor or relay;

g) non-separation of the moving armature of a contactor or relay;

h) non-opening or non closing of a contact.

The non-opening of a safety contact need not be considered.

8.6.2 The earthing of an energized circuit, in which there is a safety contact, shall cause the immediate halt and prevent re-starting of the lifting platform.

8.7 Electric safety devices

8.7.1 The electric safety devices (for example those listed in Table 1) shall act directly on the equipment controlling the supply to the driving motor and brake.

NOTE An unsafe condition is failure to respond to a safety switch or device.

Movement of the machine shall be prevented or it shall be caused to stop immediately as indicated in 8.4. The electric safety devices shall consist of either:

a) one or more safety contacts satisfying 8.7.4 directly cutting the supply to the contactors referred to in 8.3 or their relay contactors; or

b) one or more safety contacts satisfying 8.7.4 not directly cutting the supply to the contactors referred to in 8.3 or their relay contactors in conjunction with safety circuits satisfying 8.11.

8.7.2 If, because of the power to be transmitted, relay contactors are used to control the machine, these shall be considered as equipment directly controlling the supply to the machine for starting and stopping.

8.7.3 A safety switch shall not be placed in a return conductor or a circuit-protective conductor.

8.7.4 The operation of a safety contact shall be by positive separation of the circuit-breaking devices. This separation shall occur even if the contacts have welded together.

Positive opening is achieved when all the contact-breaking elements are brought to their open position and when, for a significant part of the travel, there are no resilient members (e.g. springs) between the moving contacts and the part of the actuator to which the actuating force is applied.

The design shall be such as to minimize the risk of a short circuit resulting from component failure.

8.7.5 Abrasion of conductive material shall not lead to short circuiting of contacts.

8.7.6 If safety contacts are accessible to non-competent persons, they shall be so constructed that these contacts cannot be rendered inoperative by simple means.

NOTE A magnet or bridge piece is not considered to be a simple means.

© ISO 2000 – All rights reserved

Table 1 — Examples of electrical safety switches or devices

Switch or device	Relevant clause
Door locking safety device for:	
a) closed position of landing doors (and barriers on non-enclosed lifting platforms)	9.1.2.11
b) locking of landing doors at limits of unlocking zone (and barriers on non-enclosed lifting platforms).	9.1.2.11
Safety switch for detecting slack in a suspension rope or chain.	7.1.5
Emergency stop device.	8.15.5 9.2.3.5
Switches operated by sensitive edges or surfaces (on non-enclosed lifting platforms).	10.2.5
Final limit switch.	8.16
Safety gear switch.	6.5
Barrier locking proving device.	10.2.4.3.2
Sensitive edges.	9.2.3.8
Screw/nut drive failure switch.	6.8
Safety flap contact.	10.2.4.2

8.8 Time delay

Provision shall be made for a delay of a minimum of 1 s between the stopping of the lifting platform and its being restarted in either direction.

8.9 Protection of the driving motor

Driving motors shall be protected against overloading and potentially damaging excess currents by means of a suitable device which automatically disconnects the supply. The device may automatically reset after an appropriate interval.

8.10 Electrical wiring

8.10.1 Conductors, insulation and earth bonding

8.10.1.1 The nominal cross-sectional area of all conductors shall be appropriate to the current rating. Wired power and safety circuit conductors shall be no smaller than 0,5 mm^2.

8.10.1.2 If a duct or cable contains conductors whose circuits have different voltages, all those conductors or cables shall have insulation suited to the highest voltage.

8.10.1.3 Trailing electrical power and control cables shall be securely clamped at each end to ensure no mechanical load is transmitted to cable terminations. Provision shall be made to protect the cable from abrasion.

It is recommended that flat cables shall be constructed in accordance with EN 50214 and round cables shall be constructed in accordance with CENELEC HD360 S2.

No conductor shall be smaller than 0,5 mm^2. In addition, power and safety circuit conductors shall be no smaller than 0,75 mm^2. Any earthing conductor shall be no smaller than the largest supply conductor.

© ISO 2000 – All rights reserved

8.10.1.4 All earthing continuity conductors shall be copper, except when slip-rings or tracks and carbon brushes are used. At least one slip-ring or track and carbon brush and trailing cable way should be dedicated to the earth path.

8.10.1.5 Any nut or screw used for clamping a conductor shall not be used for clamping any other component.

8.10.1.6 All exposed metalwork, other than conductors, liable to become electrically charged shall be earth bonded [see 11.1.3 b) referring to the earth bond test]. See also Figure 5 showing the grounding requirements for battery operated lifting platforms.

8.10.2 Terminals and connectors

8.10.2.1 Connectors and devices of the plug-in type shall be protected by position or design against accidental mis-connection.

8.10.2.2 Terminations shall cause no damage to the conductors or insulation.

8.10.2.3 Mains input terminals shall be conveniently accessible within the equipment and shall be identified to indicate the correct polarity, i.e. 'L' for line and 'N' for neutral. The main earth terminal shall be located conveniently near the main input and identified by an earth symbol.

8.10.2.4 Earthing terminals of the stud type shall be of a size appropriate to the conductor current rating and a minimum of M3. They shall not be used for securing any component, nor shall it be possible to loosen the connection without the use of a tool. All earth conductors shall be terminated with suitably crimped or soldered terminations.

8.10.3 Electrical identification

Terminals, connectors and electrical components shall, where appropriate, be marked with a suitable means of identification.

8.11 Safety circuits

8.11.1 Safety circuits shall comply with the requirements of 8.6 and 8.7 relative to the appearance of a fault.

Faults should be considered for open circuit and short circuit for passive components (resistors, capacitors, inductors, etc.) and, in addition, change-of-function for active components (transistors, integrated circuits, etc.) (see annex F).

8.11.2 All parts of the safety circuit shall be designed to meet the creepage and clearance distances defined in 8.5.2.

8.11.3 All components of the safety circuit shall be used within the worst case limits and within manufacturers recommendations for voltage, current and duty.

8.11.4 Safety circuits shall be designed such that the lifting platform is only allowed to operate whilst all safety circuits are functioning correctly.

8.11.5 Any fault or combination of faults which in themselves do not lead to an unsafe condition but when combined with a further fault would cause an unsafe condition shall cause the lifting platform to be stopped at the latest at the next stage of direction.

However, a combination of more than three faults can be disregarded if the safety circuit is built out of at least two channels. In the case of different status, the lifting platform shall be stopped at the latest at the next change of direction.

8.11.6 Safety circuits shall be subjected to a safety and failure analysis in accordance with the requirements of annex F.

© ISO 2000 – All rights reserved

8.12 Residual current devices

All electrical circuits, other than supplies to charging units on battery-operated lifting platforms, carrying a voltage greater than 50 V above earth shall be protected by the use of a residual current device (RCD). The maximum rated tripping current shall be 30 mA. The maximum trip time at rated tripping current shall be 200 ms. The maximum trip time at five times the rated tripping current shall be 40 ms.

Where possible, the testing of this device shall not cause spurious tripping of any other similar device fitted to the mains supply circuit.

The validity of this clause is subject to local requirements concerning electrical supply.

8.13 Additional requirements for battery-powered operation

8.13.1 For battery-powered lifting platforms, the control circuit voltage shall not exceed 60 V.

8.13.2 Batteries shall not leak, even when tilted at an angle. Batteries shall not emit fumes during normal operation, including charging.

8.13.3 A fuse should be fitted in line with the battery supply which is only accessible by the use of an appropriate tool(s). This fuse shall isolate the battery supply within half a second of the supply being short circuited and within 5 s of twice the average peak current being drawn.

8.13.4 The charging arrangement for the batteries shall be as Figure 5 a) for a.c. charging and Figure 5 b) for d.c. charging. The maximum voltage potential when measured with respect to earth shall be as follows:

a) for protected charge contacts, 250 V a.c. or 60 V d.c.;

b) for exposed charge contacts, 25 V a.c. or 60 V d.c.

Charge contacts are deemed to be exposed when accessible without the use of tools, or protected where it is not possible to touch the contacts without the use of tools.

Battery charging should be carried out at points where the lifting platform is expected to be stationary between journeys. Usually this is at each end of the rail.

8.13.5 Battery terminals shall be physically protected against short circuiting.

8.13.6 A secure location or fixing for the batteries shall be provided.

8.13.7 The carriage-isolating switch shall cause the battery to be isolated from the control and drive motor circuits.

8.13.8 Battery capacity and charging rate shall be appropriate to the conditions of service after taking into account the travel and anticipated duty rating.

8.13.9 If the lifting platform is brought to rest out of the reach of the charge contacts, this shall be indicated to the user visually or audibly.

8.13.10 The carriage chassis shall be grounded as shown in Figure 5.

8.13.11 The battery charger shall not damage or overcharge the battery, even after long periods on charge.

8.13.12 The requirements of 8.13.8 do not apply to battery back-up systems.

8.14 Cableless controls

NOTE Cableless control is suitable for applications where it is not possible or desirable to have a physical link between the lifting platform and the landing controls (e.g. on a battery-powered lifting platform).

© ISO 2000 – All rights reserved

8.14.1 The cableless control system shall be designed to work with a single lifting platform. It shall be designed such that the lifting platform shall not respond to signals from another lifting platform or other similar cableless control system. (For example, by use of an appropriate frequency spectrum, coded signals and range.)

8.14.2 Redundancy shall be provided within both the transmitter and the receiver. Within the transmitter, this may be achieved by the means specified in 8.15.6.

8.14.3 On lifting platforms with public access, the remote control device shall be in a fixed position adjacent to the lifting platform unless it is under the supervision of a qualified attendant.

8.14.4 Platform-mounted stop switches, safety contacts and safety circuits shall override all directional signals (whether from the platform controls or from the cableless controls) and the lifting platform shall stop within 20 mm in accordance with 7.2.1.

8.14.5 The cableless communication link shall remain effective throughout the length of the platform travel. The requirements of 8.4.3 shall be maintained at all points during travel.

8.14.6 The cableless communication link shall be designed so as to be fail-safe in the event of signal failure.

8.14.7 The cableless control system shall be designed so as to be no less safe than a wired control system in the event of component failure.

8.15 Operating devices

8.15.1 Operating devices shall be provided at each landing and on the platform. They shall (except for controls to be operated by a lone standing user) be located in a zone 0,8 m to 1,1 m above the landing and platform floor and not less than 0,4 m from an internal corner or adjacent wall in the platform or on the landing or to suit a specific user.

8.15.2 The operating devices used to control the movement of the platform shall be dependent upon continuous effort.

When the user has difficulty in operating normal control devices, it may be necessary to consider special devices to suit the particular disability. Recommendations for such devices are given in annex C.

8.15.3 For lifting platforms in enclosed liftways, platform operation shall override landing operation.

8.15.4 There shall be a minimum delay of 1 s before the lifting platform can be started when either of the following occurs:

a) the lifting platform is called from another landing; or

b) the landing door of the landing at which the lifting platform is resting is closed.

8.15.5 A bistable safety switch shall be fitted on the platform that, when operated, shall directly interrupt the safety circuit.

This switch shall be clearly visible and accessible to the user, easy to operate and protected by position or design against inadvertent operation.

8.15.6 Means shall be provided on each landing control station (where fitted) that, when operated, shall directly interrupt the circuit to the associated directional controls.

8.16 Terminal limit switches and final limit safety switches

8.16.1 Terminal limit switches and final limit safety switches shall be provided.

© ISO 2000 – All rights reserved

The opening of the final limit safety switch shall prevent further movement of the lifting platform in both directions of travel, until the lifting platform has been correctly re-positioned manually.

8.16.2 The terminal switches shall be arranged to stop the lifting platform automatically within ±15 mm of the level being served. This shall be independent of the final limit safety switch.

8.16.3 The lower final limit safety switch may be omitted in the case of hydraulic drives or those drives incorporating slack rope or slack chain safety switches. In addition, both upper and lower final limit safety switches may be omitted when the design of the drive system is such that overtravel beyond the normal limits of travel is not possible, even without the use of mechanical end stops.

The lower final limit safety switch may be omitted if the lower terminal limit switch is a safety switch and if bottom overtravel results in operation of the platform underside safety switches.

8.17 Emergency alarm devices

8.17.1 The emergency alarm operating device on the platform, referred to in 9.2.3.5 shall be connected to an alarm which, when activated by a platform user seeking help, shall be audible and recognizable. The installer shall consult with the purchaser or user concerning the positioning of the alarm signal (see A.5).

8.17.2 Emergency alarm devices shall either

a) be fed from a supply that is separate from the main supply to the driving motor, or

b) be equipped with a standby power source (such as battery back-up).

9 Specific requirements for lifting platforms in enclosed liftways

9.1 Liftway

9.1.1 General

9.1.1.1 Liftway floor and access beneath the platform

If access is possible beneath the platform, the liftway floor shall resist a loading of not less than 250 kg/m^2.

All equipment requiring inspection or servicing from below the platform shall be safely accessible and, if necessary, this shall be achieved by means of a mechanical blocking device conforming to 5.2.

9.1.1.2 Top clearance

When the lifting platform is in contact with the upper mechanical stop, the vertical clearance between the floor of the platform and the lowest parts of overhead obstacles shall not be less than 2 m (see Figure 6).

9.1.1.3 Enclosure construction

9.1.1.3.1 Each wall of the enclosure shall form a continuous vertical smooth surface and be composed of hard elements.

9.1.1.3.2 Any hollows in or projections from internal surfaces of enclosure walls shall not exceed 5 mm and projections exceeding 1,5 mm shall be chamfered to at least 15° to the vertical (see Figure 9).

9.1.1.3.3 The enclosure walls shall be able to withstand the application of a force of 300 N, acting at right angles at any point over an area of 5 cm^2 of round or square shape, without elastic deformation exceeding 10 mm and without any permanent deformation.

© ISO 2000 – All rights reserved

9.1.1.3.4 Subject to local building regulations, the enclosure shall extend to a height of not less than 1,1 m above the floor of the upper landing level (see Figure 6).

In addition, the liftway enclosure shall be so constructed that it extends at least to the upper edge of the platform enclosure when the platform is at the highest point in its travel, including overtravel.

9.1.1.3.5 Any vertical slot required for operational purposes shall not present a shearing or crushing hazard.

9.1.1.3.6 When glass is used in the construction of the liftway enclosure, horizontally sliding doors or hinged doors, it shall fulfil the conditions stated in Tables 2, 3 or 4 as appropriate.

Table 2 — Glass panels to be used in walls of well or of the car

Dimensions in millimetres

Type of glass	Minimum thickness	
	Diameter of inscribed circle	
	1 000 max.	2 000 max.
Toughened and laminated	8 (4 + 4 + 0,76)	10 (5 + 5 + 0,76)
Laminated	10 (5 + 5 + 0,76)	12 (6 + 6 + 0,76)

Table 3 — Glass panels to be used in horizontally sliding doors

Dimensions in millimetres

Type of glass	Minimum thickness	Width	Free door height, max.	Fixing of glass panels
Toughened and laminated	16 (8 + 8 + 0,76)	360 to 720	2 100	2 fixings upper and lower
Laminated	16 (8 + 8 + 0,76)	300 to 720	2 100	3 fixings upper/lower one side
	10 (6 + 4 + 0,76) (5 + 5 + 0,76)	300 to 870	2 100	All sides
NOTE The values of this table are valid under the condition that in case of 3- or 4- fixings, the profiles are rigidly connected to one another.				

Table 4 — Glass panels to be used in hinged doors

Dimensions in millimetres

Type of glass	Minimum thickness	Maximum diameter of inscribed circle
Toughened and laminated	8 (4 + 4 + 0,76)	1 000
Laminated	10 (5 + 5 + 0,76)	1 000
Glass panels shall always be fixed on all sides in a frame.		

© ISO 2000 – All rights reserved

9.1.1.4 Liftway entrances

9.1.1.4.1 Liftway entrances shall be protected by landing doors (see 9.1.2).

9.1.1.4.2 The clear access height onto and over the platform shall not be less than 2 m (see Figure 6).

9.1.1.4.3 The clear width of the entrances shall not be less than 800 mm (see 9.2.2.3) except

a) in buildings with public access where it shall be not less than 900 mm (see Figure 6), and

b) for use by standing lone users only in buildings with private access only, where it shall be not less than 650 mm.

In buildings with private access, reduced dimensions may be used if necessary due to restricted space.

9.1.1.4.4 The horizontal distance between the platform edges and the enclosure or between platform and landing sills shall not exceed 20 mm (see Figure 2).

9.1.1.5 Inspection doors and traps

Inspection doors and traps shall not interfere with the travel of the platform.

Inspection doors and traps shall be capable of being opened from outside with the aid of a special key or tool.

Operation of the lift shall automatically depend on the maintenance in the closed position of these doors and traps. For this purpose electric safety devices in conformity with 8.7 shall be employed.

9.1.2 Landing entrance protection

9.1.2.1 Landing doors

Openings giving access to the platform shall be provided with landing doors which

a) are imperforate;

b) are self-closing but stable in the open position;

c) do not open into the liftway;

d) require a force to open them which is not more than 40 N at the handle; and

e) are provided with a vision panel when the door or gate is made of non-transparent material and is over 1,1 m in height, which shall

   1) be not less than 60 mm in width,

   2) have its lower edge located between 300 mm and 900 mm above the floor level,

   3) have a minimum glazed area per landing door of 0,015 m^2 with a minimum of 0,01 m^2 per vision panel;

f) if they are glass, have visual markings between 1 400 mm and 1 600 mm above the floor.

9.1.2.2 Strength of landing doors

Landing doors, with their locks, shall be able to withstand the application of a force of 300 N, acting at right angles at any point over an area of 5 cm^2, of round or square shape, without elastic deformation exceeding 10 mm and without any permanent deformation.

The landing doors, with their locks shall operate satisfactorily after such a test.

© ISO 2000 – All rights reserved

Under the application of the force defined above in the case of lifting platforms without doors, the elastic deformation of the landing door towards the well interior shall not exceed 5 mm.

Under the application at the most unfavourable point of a manual force (without a tool) of 150 N in the direction of opening of horizontal sliding doors, the clearances shall not exceed 30 mm.

9.1.2.3 Height of landing doors

9.1.2.3.1 Upper level

Subject to local building regulations, the height of the landing door at the upper level shall be not less than 1 100 mm (see Figure 6).

Landing doors at the upper level on lifting platforms with a travel exceeding 2 m in buildings with public access shall be of a minimum height of 2 m above the upper landing level (see Figure 6).

In addition, the landing door at the upper level shall be so constructed that it extends at least to the upper edge of the platform enclosure when the platform is at the highest point in its travel including overtravel.

9.1.2.3.2 Lower and intermediate levels

The height of the landing door protecting a liftway entrance at the lower or intermediate level shall correspond to the full height of the entrance or extend to the top edge of the liftway enclosure, whichever is the smaller.

9.1.2.4 Construction of landing doors

9.1.2.4.1 Inner surface

The inside of the landing doors shall form a continuous hard smooth vertical surface.

9.1.2.4.2 Alignment

The inner surface of the landing doors shall form a continuous plane with the interior surface of the liftway.

9.1.2.4.3 Projections

Any projection from the inner surface of the landing doors shall conform to 9.1.1.3.2.

9.1.2.4.4 Glazing

Any glazing materials used in landing doors shall conform to 9.1.1.3.6.

9.1.2.5 Width of opening

The width of the free entrance of the landing doors shall be as specified in 9.1.1.4.3 (see also 9.2.2.3).

9.1.2.6 Clearances

Except as specified in 9.1.2.2.3, any gap under, over, at side of or between the landing doors shall be not greater than 6 mm (which may be increased to 10 mm as a result of wear) throughout the travel and overtravel of the platform.

9.1.2.7 Sills

The entrance shall be provided with a sill or ramp, of sufficient strength to withstand the passage of rated loads on to the platform.

© ISO 2000 – All rights reserved

9.1.2.8 Guiding of doors

Landing doors shall be designed to avoid, during normal operation, jamming or displacement at the extremities of their travel.

9.1.2.9 Ramps

Ramps shall be fitted on all platform access edges incorporating a step greater than 15 mm high. They shall have an inclination which is no greater than as given below. A step of up to 15 mm high is permissible at the leading edge of any ramp.

Ramping inclinations shall not be greater than:

a) 1:4 on a vertical rise up to 50 mm;

b) 1:6 on a vertical rise up to 75 mm;

c) 1:8 on a vertical rise up to 100 mm; and

d) 1:12 on a vertical rise over 100 mm.

9.1.2.10 Protection during door operation

The effort needed to resist movement of a power operated door shall not exceed 150 N, as measured at its leading edge.

The kinetic energy of any power operated door and of the mechanical elements which are rigidly connected to it, calculated or measured at the average closing speed, shall not exceed 10 J.

9.1.2.11 Door locking

9.1.2.11.1 It shall not be possible in normal operation to open a landing door when the platform is more than 50 mm from the sill level of that door.

9.1.2.11.2 It shall not be possible to make the lifting platform start or continue in motion with a landing door open. The closed position shall be detected by an electric safety device complying with 8.7.

9.1.2.11.3 It shall not be possible to make the lifting platform start or continue in motion with a landing door unlocked when the lifting platform is more than 50 mm from the sill level of that door. This may be achieved by means of a safety contact bridging the locking contact within the unlocking zone. An electric safety device complying with 8.7 shall detect whether the locking elements are properly engaged.

9.1.2.11.4 The connection between one of the contact elements which opens the circuit and the device which mechanically locks shall be positive and failsafe, but adjustable if necessary.

9.1.2.11.5 The locking elements and their fixings shall be resistant to shock.

9.1.2.11.6 The engagement of the locking elements shall be achieved in such a way that a force in the opening direction of the door does not diminish the effectiveness of locking.

9.1.2.11.7 The lock shall resist, without permanent deformation, a minimum force of 3 000 N for hinged door locks and 1 000 N for sliding door locks, on the locking element at the level of the lock and in the direction of opening of the door.

9.1.2.11.8 Locks on hinged landing doors shall be located at, or close to, the closing edge of the door and shall continue to lock effectively should the door sag.

9.1.2.11.9 The locking devices shall be designed and situated to be inaccessible when in normal use and shall be protected against deliberate mis-use.

© ISO 2000 – All rights reserved

9.1.2.12 Emergency unlocking

It shall be possible the upper and lower landing doors to be unlocked from the outside with the aid of a special key or tool such as that to fit the unlocking triangle shown in Figure 7. Intermediate doors shall not be unlockable. After emergency opening, it shall be possible to close and lock the doors without the use of a tool.

9.2 Lifting platform

9.2.1 Internal floor area

9.2.1.1 The clear loading area of the platform, excluding hand rails, shall not exceed 2 m^2.

9.2.1.2 It is recommended that the plan dimensions of the platform floor, to accommodate a standard ISO wheelchair, shall be equal to or greater than those given in Table 5 (see Figure 6). In buildings with private access, reduced dimensions may be used if necessary due to restricted space. Minimum plan dimensions should conform to local requirements.

Table 5 — Minimum dimensions of platform

Dimensions in millimetres

Principal use	Minimum plan dimensions (width × length)
When doors are located at 90° relative to each other (attendant beside wheelchair)	1 100 × 1 400
Attendant standing behind user in a wheelchair	800 × 1 600
Lone user, either standing or in a wheelchair	800 × 1 250
Lone user standing (not suitable for wheelchair use)	650 × 650
Lone user standing (with travel up to 500 mm)	325 × 350

9.2.1.3 The clear width of the platform and its entrance and of the landing entrances shall be not less than 800 mm except

a) in buildings with public access, where it shall be not less than 900 mm (see Figure 6), and

b) where intended for use by standing lone users, in buildings with private access only, where it shall be not less than 650 mm, or, if additionally the travel does not exceed 500 mm, where it shall be not less than 325 mm.

9.2.1.4 In buildings with public access, the platform length shall not be less than 1 400 mm.

9.2.2 Construction

9.2.2.1 The floor covering of the platform shall be slip resistant. The sill of the platform or landings shall be coloured to contrast with the landing floor surface at the entrance.

9.2.2.2 Where the driving, guiding or lifting mechanisms present hazards at the sides of a platform, the mechanisms shall be guarded to protect the users. The guarding shall be smooth, hard and continuous.

9.2.2.3 Ceilings shall only be fitted to lifting platforms installed in enclosed liftways. Any ceiling to the platform shall not be load bearing and shall be removable to permit access for maintenance. Labels giving warning against treading on the ceiling shall be provided.

© ISO 2000 – All rights reserved

9.2.2.4 The platform enclosure shall be able to withstand the application of a force of 300 N, acting at right angles at any point over an area of 5 cm^2, of round or square shape, without elastic deformation exceeding 10 mm and without any permanent deformation.

9.2.2.5 The following equipment shall be located on one side of the platform:

a) operating devices (see 8.15);

b) an emergency stop device (see 8.15.5);

c) an emergency alarm operating device (see 8.17).

Items b) and c) may be combined as in a single unit.

Items a), b) and c) shall be positioned in the zone specified in 8.15.1.

9.2.2.6 An easy-to-grip hand rail, located between 900 mm and 1 100 mm above the platform floor level, shall be provided on at least one non-entrance side of the platform (see Figure 2).

9.2.2.7 A toe guard, which extends over the full width of the landing entrance it faces, shall be provided under each platform sill. The vertical dimensions of the toeguard shall be at least 25 mm longer than the unlocking zone (see Figure 2).

9.2.2.8 To reduce the risk of a hand being trapped during travel, if elements of the lifting platform which may be used as handrails are closer than 80 mm to the landing door or liftway enclosure, their upper surfaces shall be fitted with sensitive edges or similar devices.

9.2.2.9 When glass is used in the walls or doors of the platform it shall fulfil the conditions of Tables 2, 3 or 4 as appropriate and conform to 9.1.2.1 f).

10 Specific requirements for lifting platforms in non-enclosed liftways

10.1 Non-enclosed liftways

10.1.1 General

10.1.1.1 Liftway floor and access beneath the platform

The requirements of 9.1.1.1 shall apply.

10.1.1.2 Top clearance

The requirements of 9.1.1.2 shall apply.

10.1.1.3 Surrounding construction

10.1.1.3.1 Adjacent surfaces

Any object less than 400 mm from the platform shall form a continuous vertical surface and shall be composed of hard elements. In addition, objects which are 120 mm or less from any part of the platform shall have smooth surfaces within the limits given in Figure 9. Each non-entrance side of the platform adjacent to a flush full height surface, if protected by a barrier, shall be within 20 mm from the continuous vertical surface.

10.1.1.3.2 Projections

The requirements of 9.1.1.3.2 shall apply. (See also Figure 9.)

© ISO 2000 – All rights reserved

10.1.1.3.3 Strength

The requirements of 9.1.1.3.3 shall apply.

10.1.1.3.4 Intermediate level partial enclosure

An imperforate partial enclosure shall be provided at any intermediate level.

This partial enclosure shall extend the full width or length of the platform and the greater of either

a) the height of the landing doors, or

b) the height of any platform side panel or barrier when the platform is at its highest position, including any overtravel.

10.1.1.3.5 Slots

The requirements of 9.1.1.3.5 shall apply.

10.1.1.3.6 Glazing materials

The requirements of 9.1.1.3.6 shall apply.

10.1.1.4 Liftway entrances

Liftway entrances at landing levels which are more than 500 mm above the lower landing shall be protected by doors (see 10.1.2).

The requirements of 9.1.1.4.2, 9.1.1.4.3 and 9.1.1.4.4 shall apply. (see also Figures 8 and 10.)

10.1.2 Landing entrance protection

10.1.2.1 Landing doors

10.1.2.1.1 Where fitted, doors at upper levels shall comply with 9.1.2.1, except that they need not be imperforate provided that

a) shearing hazards are precluded even in the event of platform overtravel,

b) protection is provided against the projection through the door of wheelchair handles and footrests, and

c) no opening exceeds 50 mm.

10.1.2.1.2 Where fitted, landing doors at intermediate levels shall conform to 9.1.2.1.

10.1.2.1.3 No door, barrier or enclosure is required at lower levels.

10.1.2.1.4 Subject to local building regulations, where fitted, doors shall be not less than 1100 mm high.

10.1.2.2 Strength of landing doors

The requirements of 9.1.2.2 shall apply.

10.1.2.3 Construction of landing doors

The requirements of 9.1.2.4 shall apply, except that these requirements may be relaxed for doors at upper levels in accordance with 10.1.2.1.1 and 10.1.2.6.

© ISO 2000 – All rights reserved

10.1.2.4 Width of opening

The width of the free entrance at the landing shall be as specified in 9.1.2.5.

10.1.2.5 Clearances

The requirements of 9.1.2.6 shall apply for all doors, except for doors at upper levels where increased clearances are permitted provided that

a) shearing hazards are precluded, even in the event of platform overtravel, and

b) protection is provided against the projection through the door of wheelchair handles and footrests.

10.1.2.6 Sills

The requirements of 9.1.2.7 shall apply.

10.1.2.7 Guiding of doors

The requirements of 9.1.2.8 shall apply.

10.1.2.8 Landing entrance ramps

Where provided the requirements of 9.1.2.9 shall apply.

10.1.2.9 Protection during door operation

The requirement of 9.1.2.10 shall apply.

10.1.2.10 Door locking

The requirements of 9.1.2.11 shall apply.

10.1.2.11 Emergency unlocking

The requirements of 9.1.2.12 shall apply.

10.2 Lifting platform

10.2.1 Internal floor area

The requirements of 9.2.1 shall apply.

10.2.2 Construction

The requirements of 9.2.2 shall apply (see also Figure 10).

10.2.3 Platform entrance protection

10.2.3.1 To prevent roll away

In order to prevent roll away of a wheelchair, each platform shall, on the lower landing side, be provided with protection in accordance with at least the minimum requirements specified below.

a) Platforms with travel up to 500 mm: a safety flap or similar device in accordance with 10.2.3.2 shall be provided.

© ISO 2000 – All rights reserved

b) Platforms with travel between 500 mm and 2000 mm: a safety flap or similar device in accordance with 10.2.3.2 and a barrier conforming to 10.2.3.3, which shall be locked in accordance with 10.2.3.3.2, shall be provided.

c) Platforms with travel above 2 000 mm: a door shall be provided. Doors shall not be less than 1 100 mm high and shall conform to 9.1.2 and 10.1.2.1.1. A safety flap or similar device in accordance with 10.2.3.2 may form the lower part of the entrance protection.

10.2.3.2 Safety flap

Any safety flap shall be solid, have a minimum height of 100 mm and shall cover the full width of the platform. It may be activated by the movement of the platform away from the lower landing and shall remain positively in the raised position until the platform returns to the lower level. It shall be operated positively or be provided with a safety contact that will stop the movement of the platform within 300 mm of the lower level if the flap has failed to rise to its raised position. The flap shall be capable of withstanding the impact of a laden wheelchair without deformation. The inclination and any step of the safety flap shall conform to the requirements of 9.1.2.9.

10.2.3.3 Barriers

10.2.3.3.1 Barriers shall be a minimum of 1100 mm high comprising at least an intermediate bar within 300 mm from the platform floor. The barrier shall be able to withstand the forces specified in 10.2.3.3.2.

10.2.3.3.2 Barriers and any locks shall be able to withstand the application of a force of 300 N, acting at right angles at any point over an area of 5 cm^2, of round or square shape, without elastic deformation exceeding 10 mm and without any permanent deformation.

10.2.3.3.3 It shall not be possible in normal operation to open a barrier when the platform is more than 50 mm from the appropriate landing level.

10.2.3.3.4 It shall not be possible for the platform to continue in motion beyond 75 mm from the appropriate landing level with the barrier unlocked. The locked position shall be detected by an electric safety device conforming to 8.7.

10.2.3.3.5 The requirements of 9.1.2.11.4 to 9.1.2.11.7 and 9.1.2.11.9 shall also apply.

10.2.3.3.6 Locks shall continue to lock effectively, should the barrier sag.

10.2.3.4 Non-access edges of the platform

10.2.3.4.1 Platforms with travel up to 500 mm

Non-access edges which are not adjacent to a flush full-height surface shall be protected by roll off guards. These shall be a minimum height of 75 mm above the platform surface.

10.2.3.4.2 Platforms with travel between 500 mm and 2 000 mm

Non-access edges which are not adjacent to a flush full-height surface shall be protected in addition by a fixed barrier conforming to 10.2.3.3.1.

10.2.3.4.3 Platforms with travel above 2 000 mm

For platforms which are not adjacent to a flush full height surface, a fixed imperforate barrier shall be used. The barrier shall be a minimum 1 100 mm high. The barrier shall be able to withstand the forces specified in 10.2.3.3.2.

© ISO 2000 – All rights reserved

10.2.4 Under-surface protection

10.2.4.1 General

All potential trapping hazards, arising from any part of the platform under-surface, shall be eliminated as follows:

a) by encasing the space under the platform within an imperforate box to prevent access; or

b) by surrounding the space under the platform with a robust bellows unit or similar device to prevent access, and by protecting the entire periphery of the platform. The bellows shall be able to withstand the application of a force of 300 N acting at right angles at any point over an area of 5 cm^2, of round or square shape, without elastic deformation exceeding either a maximum of 75 mm or the distance to contact an internal moving component, whichever is the smaller. The test should not cause permanent damage to the bellows. The test shall be conducted with the platform located at the top landing level, i.e with the bellows fully extended. In addition, for lifts with a travel greater than 1 m, a test should be conducted with the lift raised 1 m from the lowest finished floor level; or

c) by providing a sensitive surface over the entire area of the under-surface of the platform.

10.2.4.2 Sensitive edges or surfaces

10.2.4.2.1 The operation of any sensitive edge or sensitive surface shall initiate a break in the electrical supply to the motor and brake in the direction in which the lifting platform is operating. This shall be achieved by the use of a safety contact or safety circuit. Where appropriate, operation of controls in the opposite direction of travel to enable the obstacle to be cleared shall be possible.

The average force required to operate any sensitive edge shall not exceed 30 N when measured at each end and the mid point.

The average force required to operate any sensitive surface shall not exceed

a) 50 N for surfaces with an area equal to or less than 0,15 m^2, or

b) 100 N for surfaces with an area greater than 0,15 m^2,

when measured at two diagonally opposite corners and the centre point.

10.2.4.2.2 The stroke of these devices shall not be less than the stopping distance of the platform.

11 Testing, inspection and servicing

11.1 Test and examination after installation

11.1.1 Immediately upon completion of installation and prior to being put into service, lifting platforms shall be subjected to a thorough examination and test by a qualified person on behalf of the manufacturer or his agents in accordance with annex B.

11.1.2 A test and examination certificate which declares at least all the information and the results of all checks both on-site and off-site listed in annex B shall be completed.

11.1.3 The lifting platform shall be subjected to electrical tests by instruments as follows.

a) A d.c. voltage of not less than twice the operating voltage (r.m.s. value of an a.c. supply) shall be applied for the measurement of insulation resistance, except that for tests on low-voltage circuits the test voltage need not exceed 500 V d.c.

© ISO 2000 – All rights reserved

The resistance of the insulation between conductors and between conductors and earth shall be greater than 1 000 Ω/V with a minimum of

— 500 kΩ for power circuits and circuits containing electrical safety devices, or

— 250 kΩ for other circuits.

Control electronics not forming part of the safety or drive motor circuit may be disconnected during this test.

b) When applying a test voltage of not more than 40 V, the resistance between any accessible metal part and the main earth terminal (or ground on isolated circuits) shall not exceed 0,5 Ω.

As an alternative to the above, check that the circuit breaker or fuse protecting the safety circuit will trip or blow if the safety circuit is earthed on the platform and at each end of the rail.

For SELV-protected circuits, note the requirements of the relevant part of IEC 60364.

11.1.4 Tests to verify the correct tripping speed of the overspeed governor (or, on hydraulic systems, the rupture valve) and correct function of the safety gear at rated load and speed shall be carried out. These may be carried out off-site. If the safety gear test is carried out off-site, an additional functional test on the safety gear shall be carried out on-site at the time of installation, but this need not be at full load.

11.1.5 Copies of all certificates following the test, hand-over, inspection or service shall be retained on file by the supplier for a period of at least 10 years and shall be made available to the purchaser or the purchaser's representative on request.

11.2 Periodic examinations, tests and servicing

Guidance shall be provided to the purchaser on periodic examination and servicing, and testing following alterations to the equipment.

This guidance shall include advice that lifting platforms should be kept in good repair and working order, with emphasis on the need for routine servicing, and advice on the risk of damage to equipment or injury to users if recommended servicing intervals are exceeded.

12 Technical literature

The supplier shall provide the owner of the lifting platform with technical literature written in the language(s) of the country in which the machine is installed.

NOTE The need for additional languages is a matter of judgement and is not a requirement.

The technical literature shall include the following minimum information, as appropriate:

a) the name and address of the owner or user;

b) the name and address of the manufacturer and the supplier;

c) year of installation;

d) serial number;

e) rated load in kilograms;

f) full operating instructions;

© ISO 2000 – All rights reserved

g) an electrical circuit wiring diagram in accordance with the relevant part of IEC 60617 showing the electrical connections and components, together with all necessary identification markings (see 8.10.3);

h) an acknowledgement that the purchaser and/or user has received proper instruction and demonstration on the correct and safe usage of the lifting platform;

i) in buildings with public access, a technical register with pages for reports of any accidents, details of servicing, inspection and any major modifications to the machine; in buildings with private access it is permissible for such records to be maintained off-site by the company responsible for routine inspection and servicing;

j) recommended intervals for routine inspection and servicing;

k) the name, address and telephone number of person(s) to contact in the event of emergency or breakdown.

13 Labels, notices and operating instructions

13.1 General

The information, operating instructions, etc., listed in 13.2 to 13.8 shall be displayed. The text shall be legible, readily understandable and in accordance, where applicable, with ISO 4190-5. The height of the letters in the legends shall not be less than 10 mm for upper-case letters and 7 mm for lower-case letters. The legends shall be written in a language appropriate to the country in which the lifting platform is installed.

Where required by national legislation, appropriate safety signs in accordance with ISO 3864 shall be used in association with relevant notices.

The labels, etc., bearing the legends and symbols shall be positively fixed in position and shall be of tear-resistant durable material.

Consideration should be given to the need for the provision of information in tactile or auditory form where appropriate.

13.2 On the platform

13.2.1 Notices bearing the following minimum information shall be displayed on the platform:

a) the rated load, in kilograms, and the maximum number of persons that may be carried (the height of the characters indicating the loading conditions shall be not less than 10 mm for upper-case letters and numbers, and 7 mm for lower-case letters); an example of a typical load plate is shown in Figure 11;

b) the name of the manufacturer, the serial number and the year of installation.

13.2.2 The function of all devices controlling the operation of the platform shall be identified.

13.2.3 Any emergency alarm device specified in 8.17 shall be coloured yellow and shall be identified by a bell symbol; an example is shown in Figure 12 (i.e. symbol No. 5013 in IEC 60417-2:1998).

13.2.4 The emergency stop device specified in 8.15.5 and 9.2.3.5 shall be coloured red and shall be identified by the legend STOP.

13.2.5 Where a ceiling is fitted on a lifting platform installed in an enclosed liftway, a label giving warning that the ceiling is not load bearing and warning against treading on the ceiling shall be provided.

13.3 At each entrance

A disabled persons' symbol as shown in Figure 13 (i.e. symbol No. 0100 of ISO 7000:1989), shall be displayed at each entrance. The height of the symbol shall be not less than 50 mm.

© ISO 2000 – All rights reserved

13.4 At machinery spaces

13.4.1 Warning notice

A notice bearing the following legend shall be displayed on the outside of doors, trap doors, etc., giving access to machinery:

DANGER — MACHINERY

Access forbidden to unauthorized persons

13.4.2 Emergency manual operation

Detailed step-by-step emergency manual operating instructions in accordance with 7.3.1 shall be displayed within the machinery space.

A direction label such as that shown in Figure 3 indicating the direction of movement of the platform shall be fitted in a prominent position on the hand-winding shaft housing or on the winding handle.

On hydraulically powered lifting platforms, a notice bearing the following legend shall be displayed adjacent to the manual lowering valve:

DANGER

Emergency lowering valve

13.5 By the main switch

The switch for the main electrical supply to the lifting platform shall be identified.

For hydraulically powered lifting platforms, the switch identification shall also bear the following legend:

Switch off only when the platform is at the lowest level

13.6 At the access to the underside of the platform

Adjacent to the access point to the underside of the platform, a notice shall be displayed which bears instructions for the safe use of the mechanical blocking device specified in 5.2, for example:

Switch OFF at main switch

Place the mechanical blocking device in correct position before gaining access beneath platform

13.7 Safety gear

When required by national regulations, safety gear shall carry its type approval mark and reference.

13.8 Alarm

The alarm signal referred to in 8.16 shall be identified by the following legend:

LIFTING PLATFORM ALARM

Where more than one lifting platform is installed, the alarm for each platform shall be individually and uniquely identified.

© ISO 2000 – All rights reserved

13.9 Operating instructions

On lifting platforms with public access where assistance to users is not available, detailed operating instructions shall be provided.

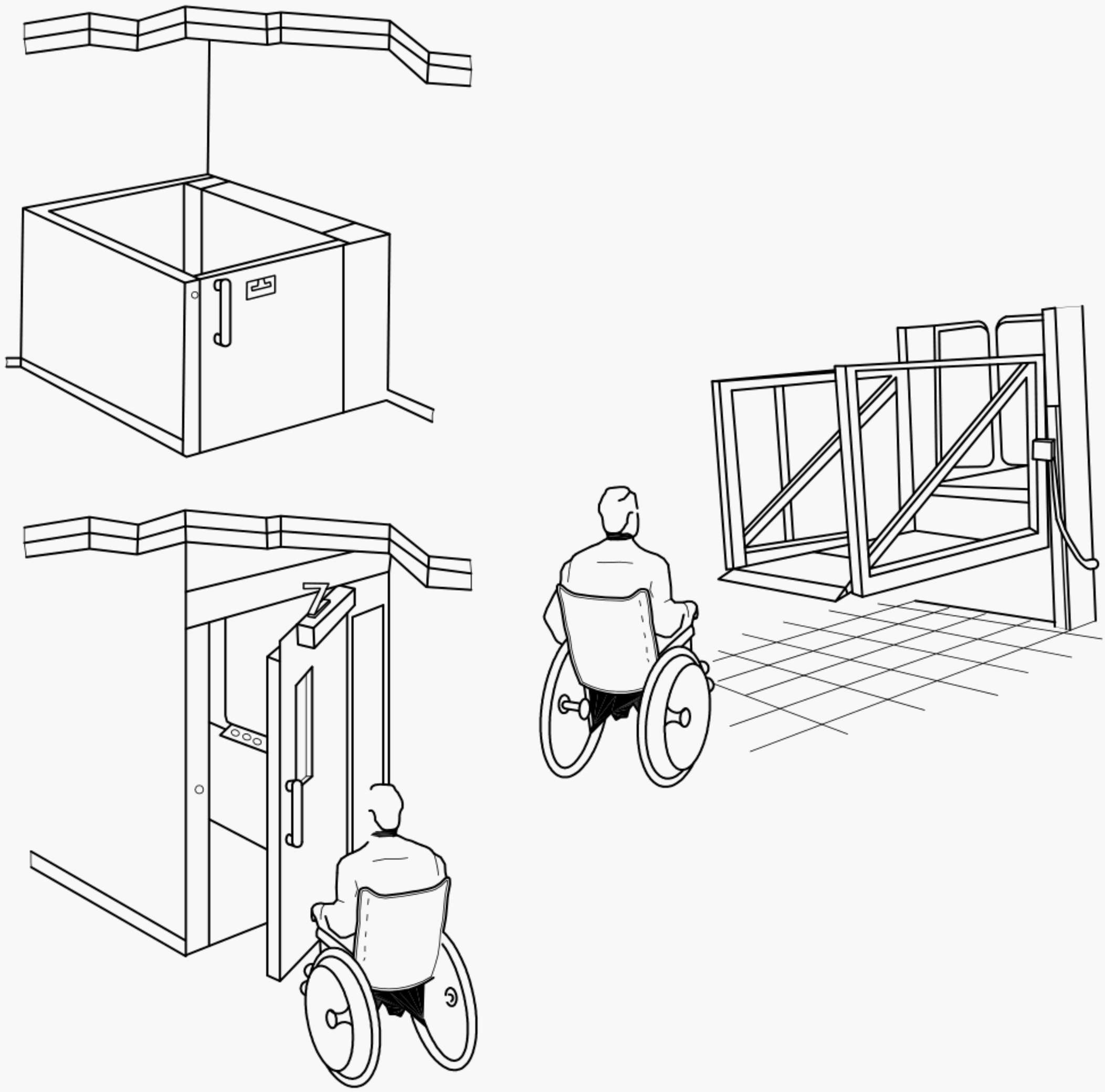

a) Enclosed liftway **b) Non-enclosed liftway**

Figure 1 — Examples of vertical lifting platforms with enclosed and non-enclosed liftways

© ISO 2000 – All rights reserved

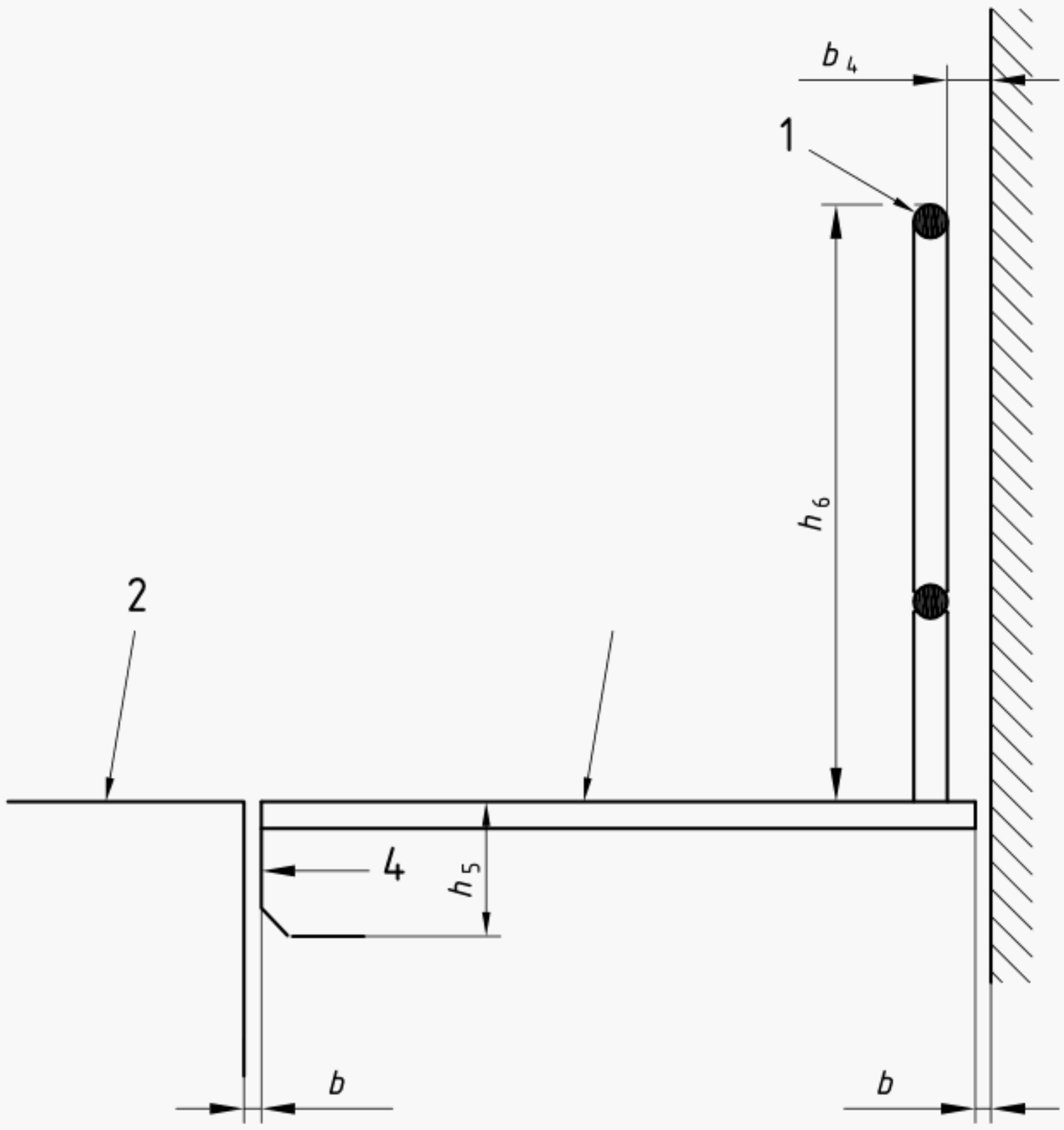

Key

1 Protection device required if b_4 < 80 mm
2 Landing level
3 Platform
4 Toe guard

Description	Subclause	Symbol	Dimension mm
Distance between enclosure and platform edges	9.1.1.4.4	b_3	⩽ 20
Distance between handrail and surfaces	9.2.2.8	b_4	⩾ 80
Toe guard height	9.2.2.7	h_5	⩾ Unlocking zone + 25
Handrail height	9.2.2.6	h_6	⩾ 900 ⩽ 1 100

Figure 2 — Dimensions and clearances for lifting platform with enclosed liftway

© ISO 2000 – All rights reserved

Dimensions in millimetres

Figure 3 — Example of a typical direction label (hand-winding)

© ISO 2000 – All rights reserved

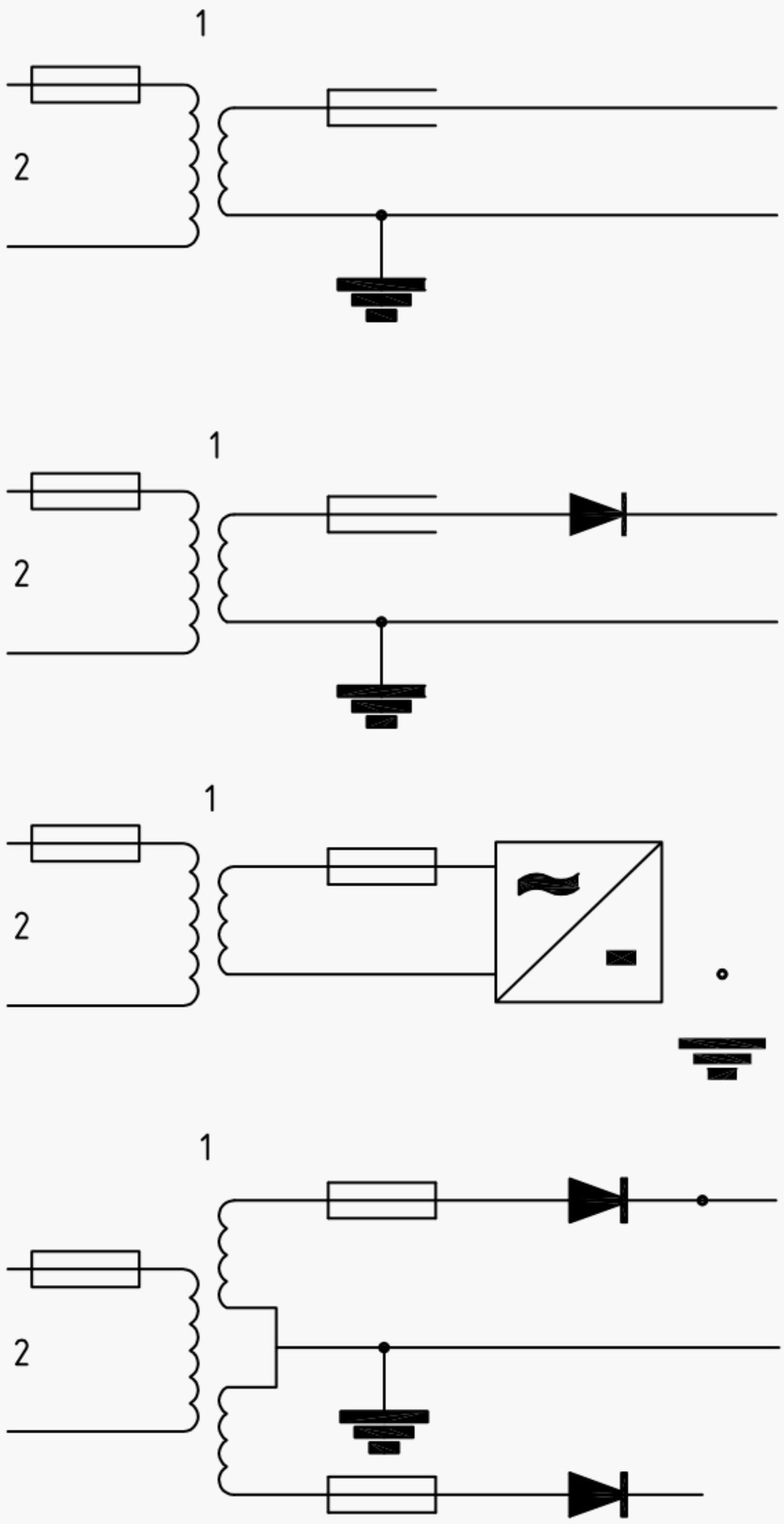

Key

1 Isolating transformer

2 Primary supply

3 Control circuit

Figure 4 — Control circuit supply

© ISO 2000 – All rights reserved

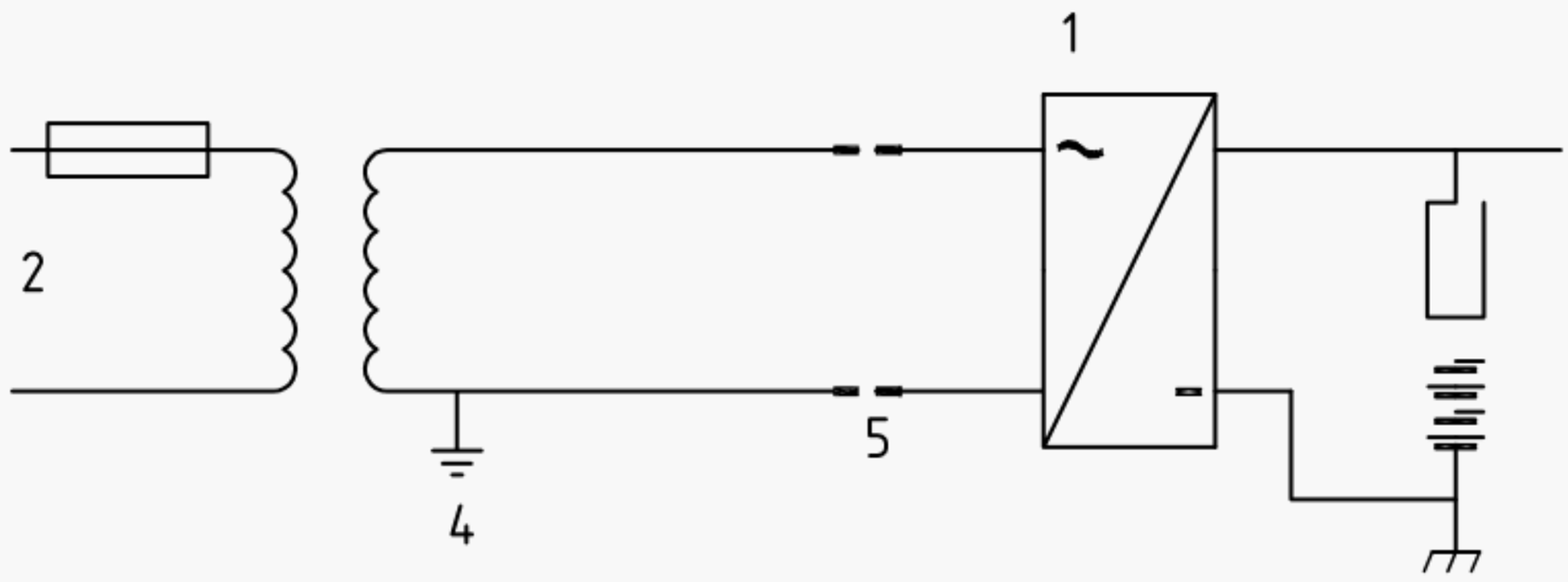

a) A.c. charge contacts

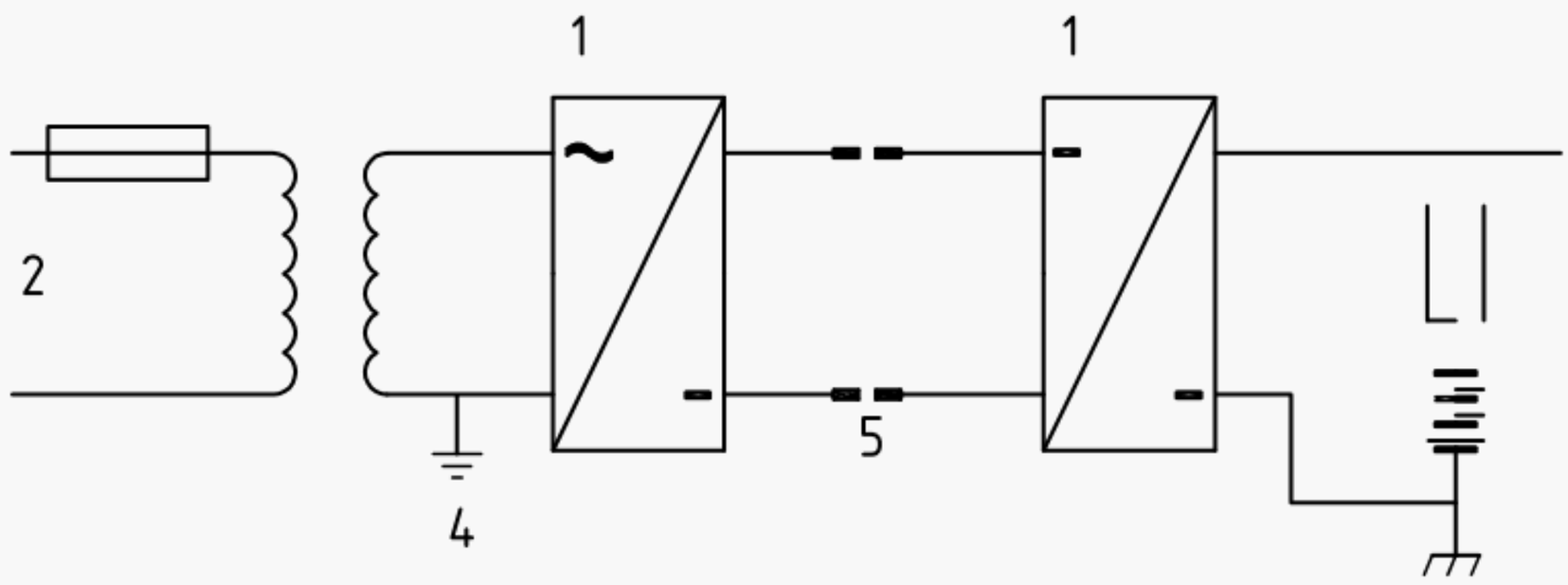

b) D.c. charge contacts

Key

1 Step-up a.c.– d.c. converter
2 Step-up d.c.– d.c. converter
3 Control circuit 60 V max.
4 See note
5 Charge contacts

NOTE The symbol denotes the negative side of the battery supply is connected to the chassis of the lifting platform.

Earthing is not required on SELV-protected charging circuits.

Figure 5 — Charging supply for battery-powered lifting platforms

© ISO 2000 – All rights reserved

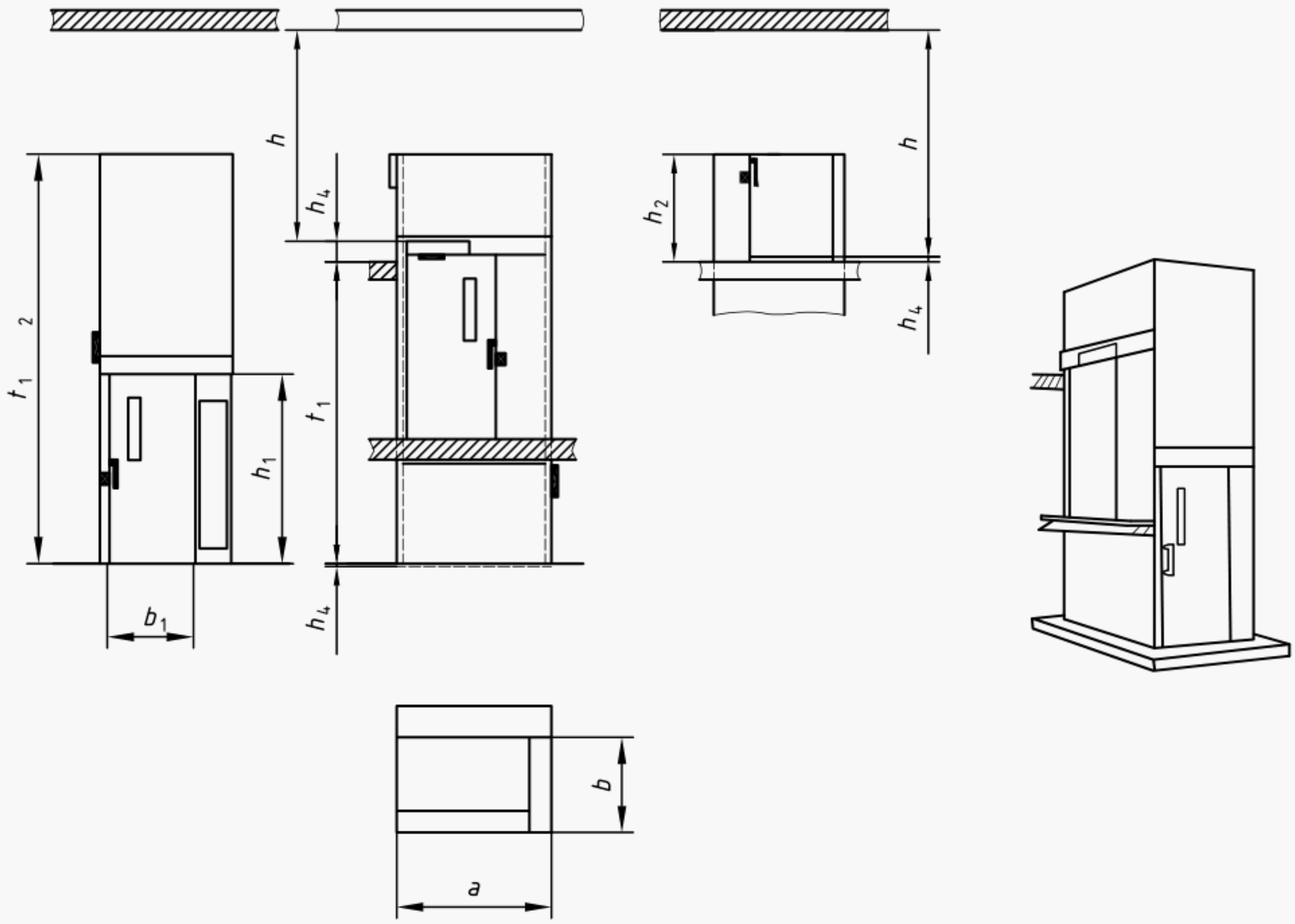

h_4 is the overtravel distance.

Description	Subclause	Symbol	Dimension mm
Travel	1c)	t_1	⩽ 4000
Clear access height	9.1.1.4.2	h_1	⩾ 2000
Enclosure height/Upper landing door height	9.1.1.3.4 9.1.2.3.1	h_2	⩾ 1 100 (restricted) ⩾ 2 000 (public if travel > 2 m)
Top clearance	9.1.1.2	h_3	⩾ 2 000
Platform width	9.2.1.2 9.2.1.3	b	⩾ 800 (restricted) [a] ⩾ 900 (public)
Platform length	9.2.1.2 9.2.1.4	a	⩾ 1 250(restricted) [a] ⩾ 1 400 (public)
Clear access width	9.1.1.4.3	b_1	⩾ 800 (restricted) [a] ⩾ 900 (public)
[a] For a long-standing user, this dimension becomes 650 mm.			

Figure 6 — Lifting platform with enclosed liftway

© ISO 2000 – All rights reserved

Dimensions in millimetres

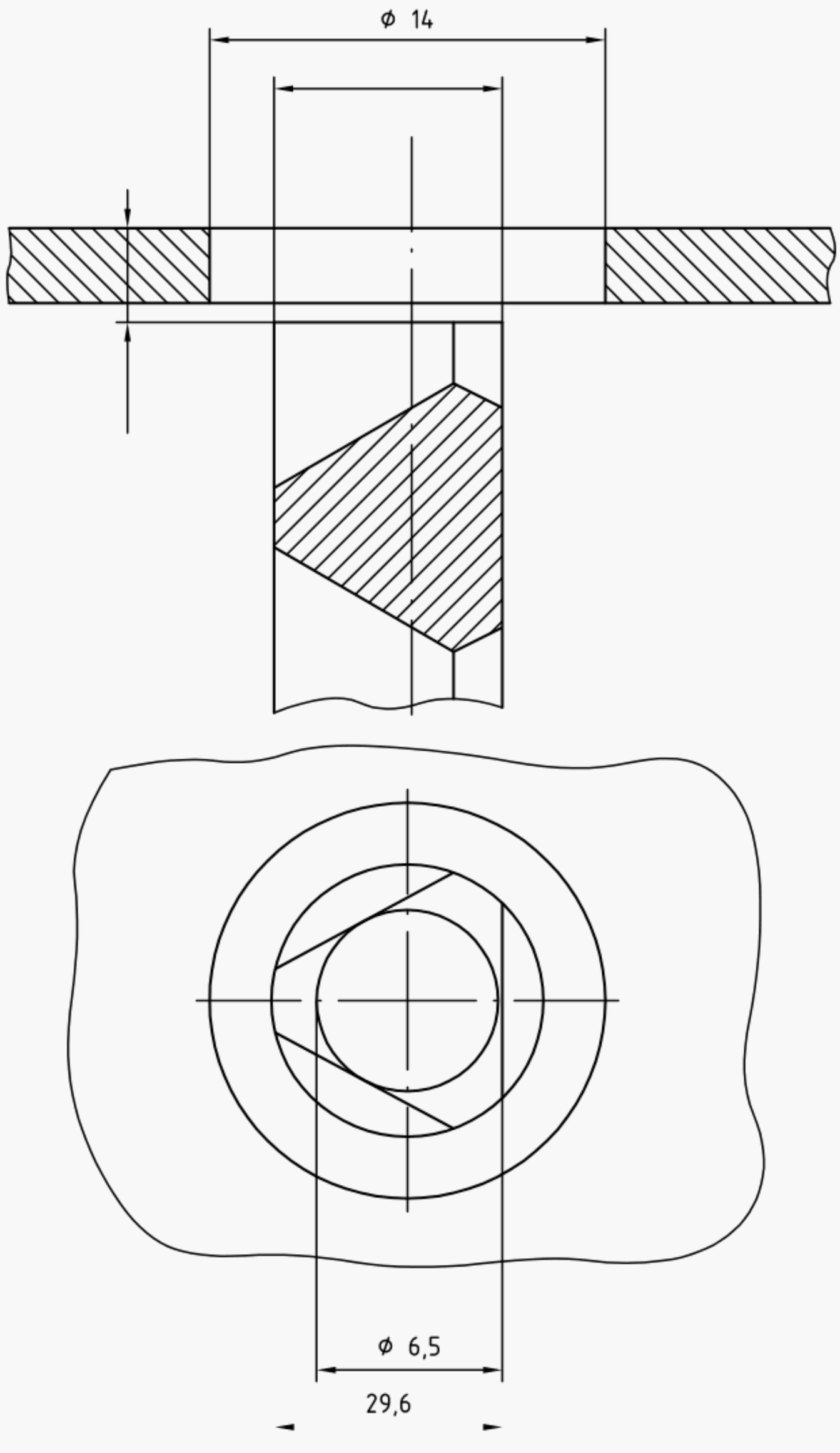

Figure 7 — Unlocking triangle (see 9.1.2.12)

© ISO 2000 – All rights reserved

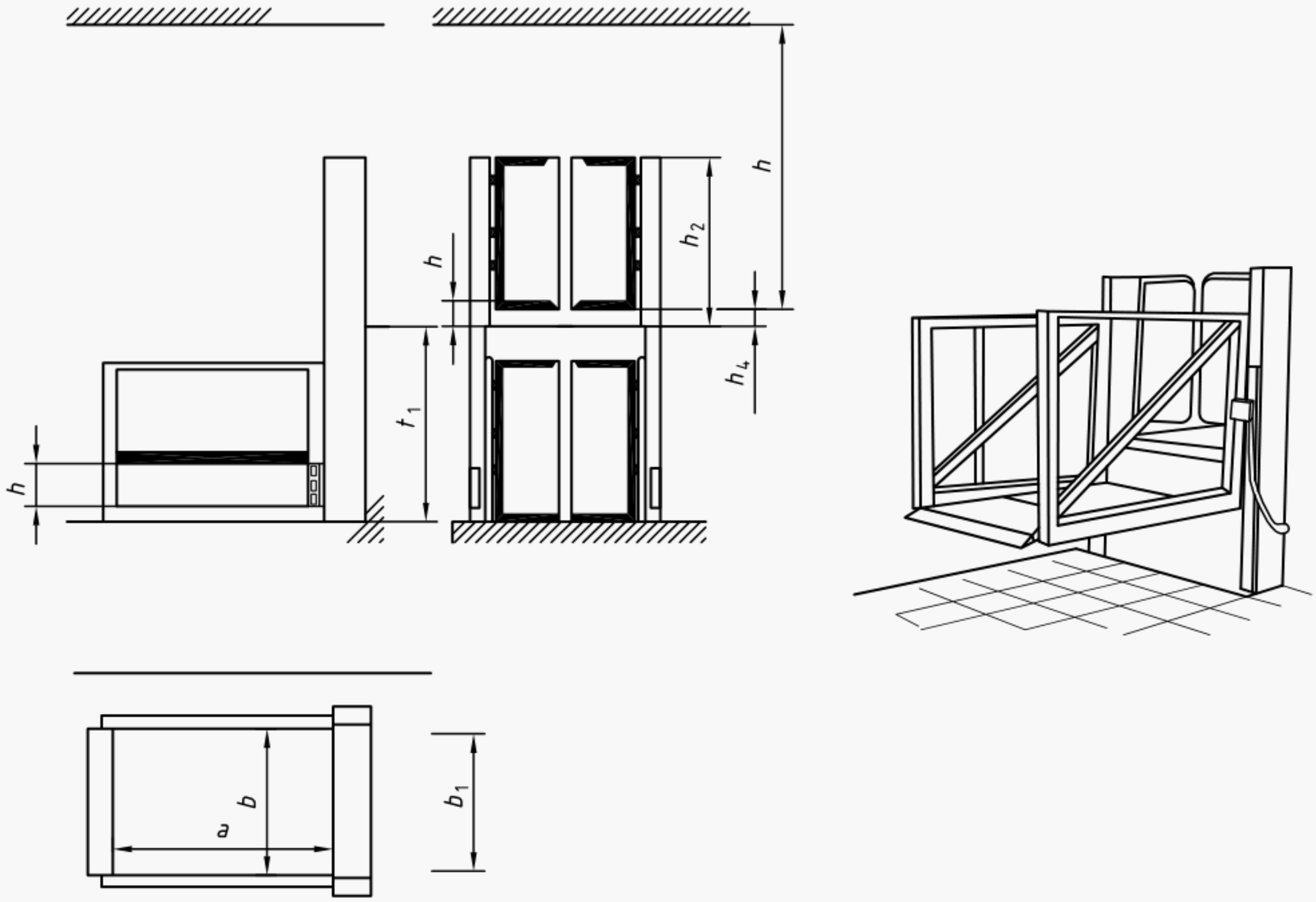

h_4 is the overtravel distance.

Description	Subclause	Sign	Dimension mm
Travel	1b)	t_1	⩽ 4 000 (restricted) ⩽ 2 000 (public)
Upper landing door/Bar height	10.1.2.1.4	h_2	⩾ 1 100
Clear access height/Top clearance	10.1.1.2	h_3	⩾ 2 000
Intermediate bar	10.2.3.3.1 10.2.3.4.2	h_8	⩽ 300
Platform width	9.2.1 10.2.1	b	⩾ 800 (restricted) [a] ⩾ 900 (public)
Platform length	9.2.1 10.2.1	a	⩾ 1 250 (restricted) [a] ⩾ 1 400 (public)
Clear access width	10.1.1.4	b_1	⩾ 800 [a] ⩾ 900 (public)

[a] For a long-standing user, this dimension becomes 650 mm.

Figure 8 — Lifting platform with non-enclosed liftway

© ISO 2000 – All rights reserved

Dimensions in millimetres

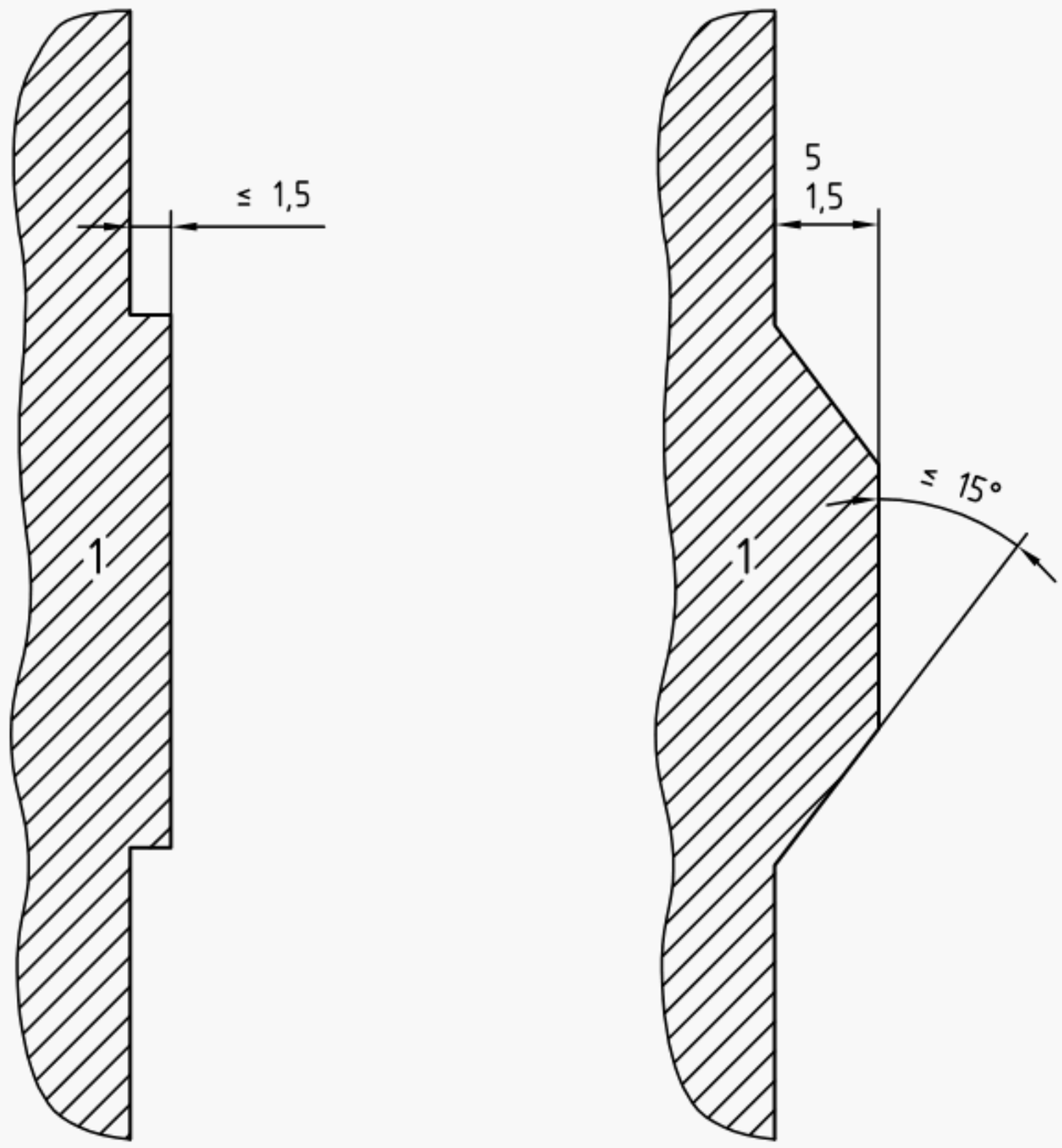

Key

1 Door surface of enclosure wall

Figure 9 — Dimensions of permissible projections for enclosed and non-enclosed liftways

© ISO 2000 – All rights reserved

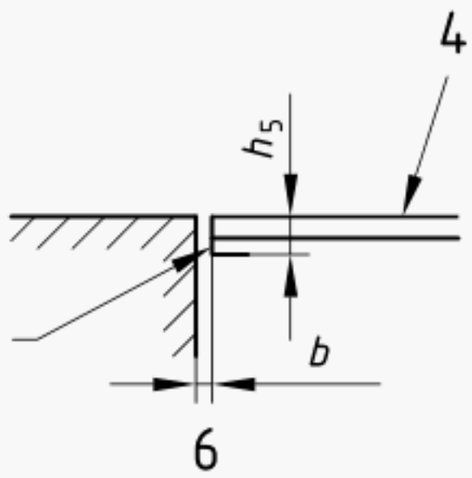

a) Higher or intermediate landing side entrance, toe guard

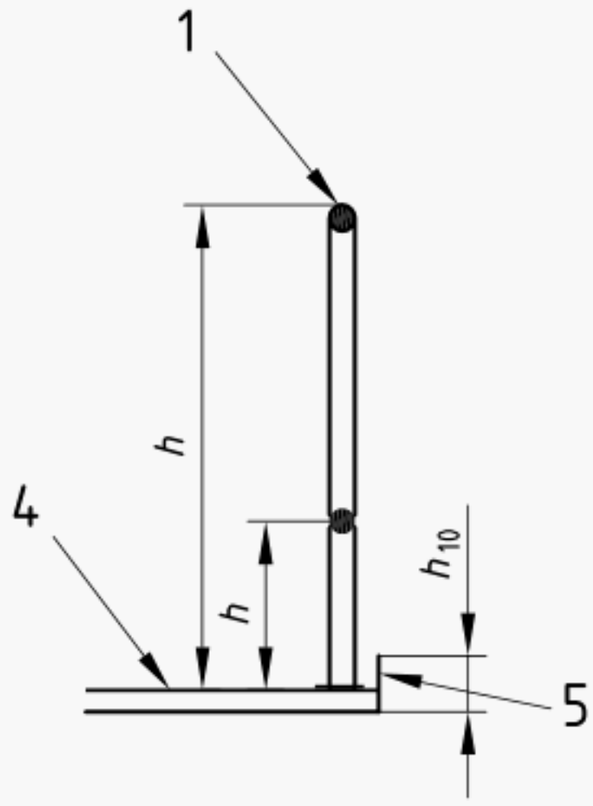

b) Lower landing side entrance, safety flap for platform with travel up to 500 mm (10.2.3.1)

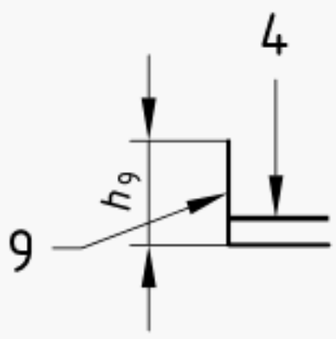

c) Non-access edges of the platform; protection by a barrier and a roll-off guard for platform with travel between 500 mm and 2000 mm (10.2.3.4.2)

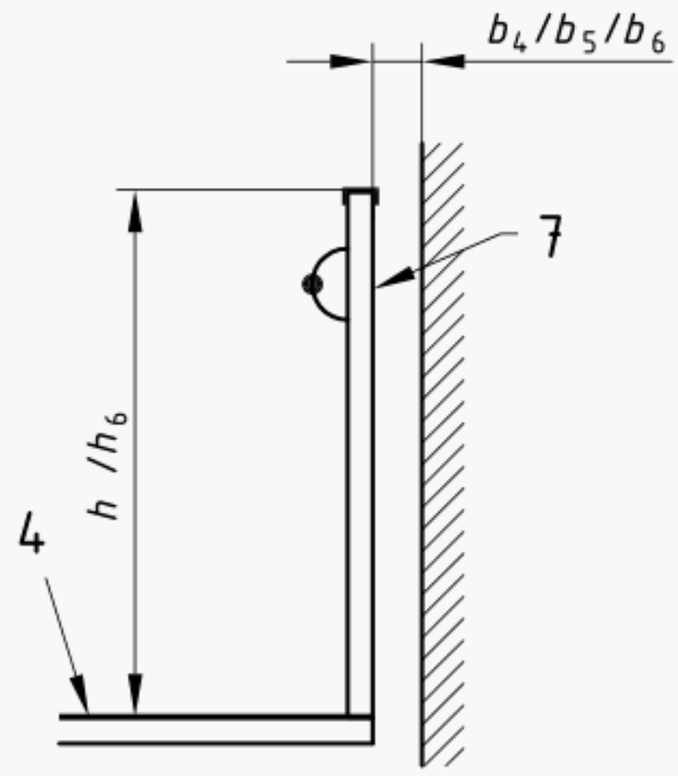

d) Non-access edges of the platform; protection by an imperforate barrier for platform with travel above 2 000 mm (10.2.3.4.3); the barrier is used as a handrail

Key

1 Protection device required if b_4 < 80 mm
2 Toe guard
3 Landing level
4 Platform
5 Roll-off guard
6 Platform entrance
7 Handrail required on at least one non-entrance side
8 Open edge of platforms on non-entrance sides when travel is $\leqslant$ 500 mm
9 Safety flap

Figure 10 — Dimensions and clearances for lifting platforms with non-enclosed liftway

© ISO 2000 – All rights reserved

Description	Subclause	Symbol	Dimensions mm
Distance between enclosure and platform edges	10.1.1.3.1	b_3	⩽ 20
Distance between handrail and surfaces	9.2.2.8 10.2.3	b_4	⩾ 80
Distance between moving part and adjacent surface if not continuous and vertical	10.1.1.3.1	b_5	⩾ 400
Distance between moving part and adjacent surface if not continuous, vertical and smooth	10.1.1.3.1	b_6	⩾ 120
Toe guard height	9.2.2.7 10.2.3	h_5	⩾ Unlocking zone +25
Handrail height	9.2.2.6 10.2.3	h_6	⩾ 900 ⩽ 1 100
Barrier height	10.2.3.3.1	h_7	⩾ 1100
Intermediate bar	10.2.3.3.1	h_8	⩽ 300
Safety flap height	10.2.3.2	h_9	100
Roll-off guard height	10.2.3.4.1	h_{10}	⩾ 75

Figure 10 — Dimensions and clearances for lifting platforms with non-enclosed liftway *(continued)*

Dimensions in millimetres

Figure 11 — Example of a typical load plate (see 13.2.1)

Figure 12 — Example of an alarm bell symbol (see 13.2.3)

© ISO 2000 – All rights reserved

Dimensions in millimetres

Figure 13 — Disabled persons' symbol (see 13.3)

© ISO 2000 – All rights reserved

Annex A
(informative)

Guidance in the selection and purchase of suitable powered lifting platforms

A.1 Introduction

The guidance given in this annex is to assist in the selection of a suitable powered lifting platform. It reminds purchasers and installers of additional factors that will require their attention.

A.2 Selection of lifting platform

A.2.1 Suitability

When selecting a powered lifting platform, consider if the needs of the user are likely to change in the future.

Select a lifting platform with a rated load that is capable of carrying the maximum foreseeable load.

Ensure that the user(s) can be safely transported on the platform, whether sitting, standing or seated in a wheelchair.

Where either manual or automatic operation are optionally available for devices such as doors, barriers or hinged platforms, consider which is more appropriate for the user.

A.2.2 Control (operating) devices

Consider the position, type and number of operating controls that would suit users with differing disabilities.

Consider whether a key switch, electronic card, or similar means is necessary to restrict the use of the lifting platform to authorized users.

A.2.3 Location of lifting platform

Check the proposed location of the lifting platform is suitable. For example, check the following:

a) that the installation will not obstruct normal activities in and about the building;

b) that the site location and proposed supporting structure is strong enough to support the lifting platform;

c) that adequate wheelchair manœuvring space will be available at each landing level served (recommended minimum dimensions are given in Figure A.1);

d) that the class of protection against external influences is adequate for the intended application.

A.2.4 Duty cycle

The anticipated maximum number of journeys per hour should be determined by the purchaser and communicated to the supplier.

© ISO 2000 – All rights reserved

Dimensions in millimetres

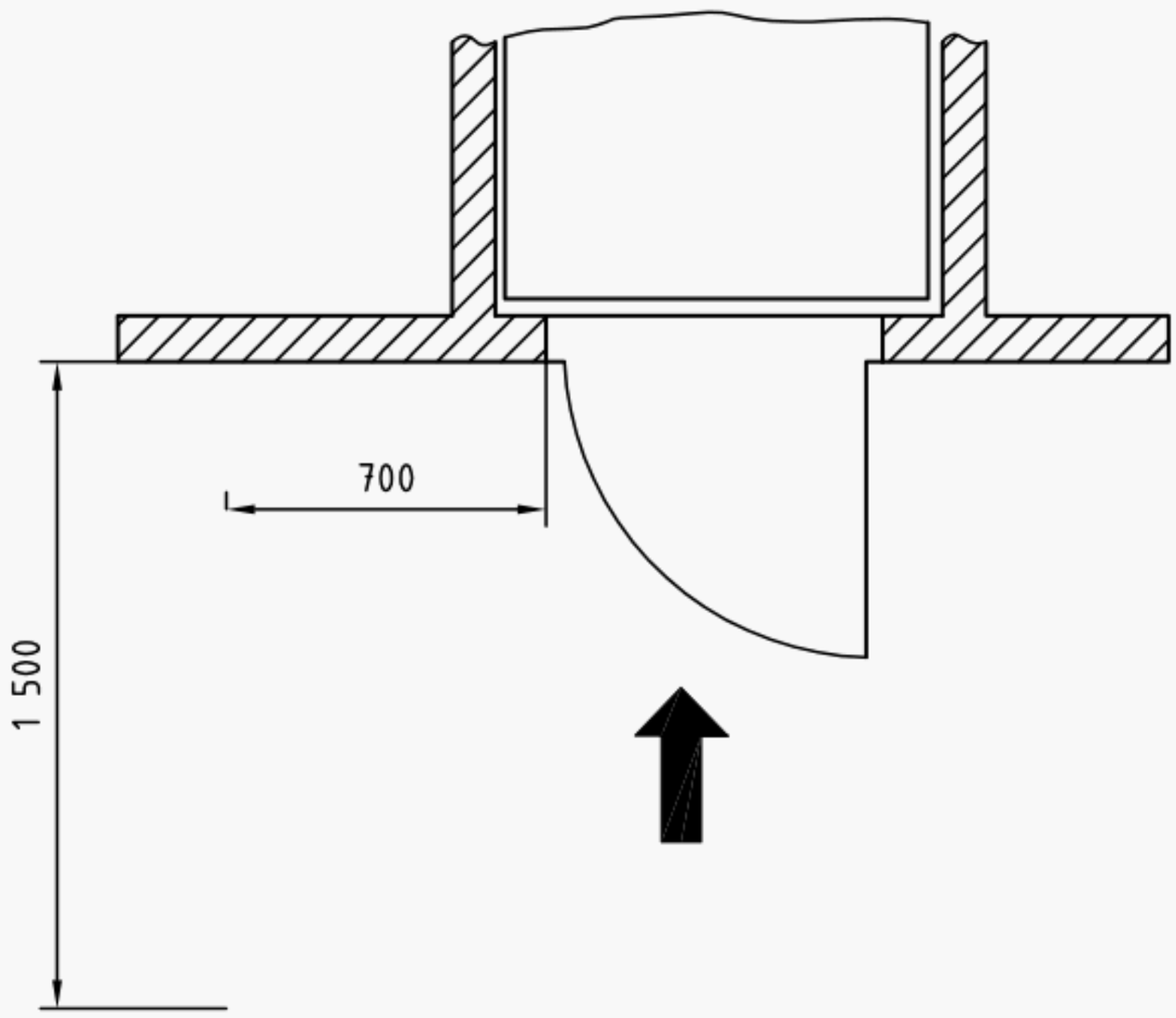

Figure A.1 — Recommended minimum wheelchair manœuvring space at landing

A.3 Electrical supply and lighting

Ensure that a suitable electrical supply is available.

Ensure that adequate lighting is available on the landings in the vicinity of the hoist-way entrances.

A.4 Operating/emergency instructions

Ensure that operation of the lifting platform is demonstrated to the user and that the user is fully instructed on its safe use, including

— instruction on the correct emergency operating procedure in the case of breakdown, and

— the names, addresses and telephone numbers of persons to contact for emergency service.

A.5 Maintenance

Ensure that the purchaser is informed of requirements for the examination, testing and servicing of the lifting platform and of any associated national regulatory requirements.

A.6 Alarm system

Consideration should be given to the desirability of providing an alarm system that would alert a dependable assistant or summon help from beyond the immediate location of the lifting platform.

© ISO 2000 – All rights reserved

Annex B
(informative)

Recommendations for examination and testing before going into service

It is recommended that the lifting platform is inspected for compliance with this part of ISO 9386. Checks should be carried out before a lifting platform is put into service to verify the following:

a) all control and operating devices function correctly;

b) all barriers, ramps, locks, hinged platforms and similar devices operate correctly;

c) all electrical safety contacts and devices function correctly;

d) the suspension elements and their attachments are adequate and in order;

e) the suspension rope/chain test certificate is available and in order (the test certificate must state the safe working load and minimum breaking load);

f) the correct clearance dimensions from the surrounding structure are maintained throughout the full travel of the lifting platform;

g) the insulation resistance of motor and control circuits (where necessary with electronic components disconnected) conforms to 11.1.3 a);

h) the resistance of the electrical protective path between any accessible metal part of the lifting platform and the main earth terminal is in accordance with 11.1.3 b);

i) the polarity of the mains supply connection is correct;

j) the overspeed governor (and, on hydraulic systems, the rupture valve) and the safety gear function correctly in accordance with clause 6, 7.14.8 and 11.1.4;

k) the mechanism for emergency/manual operation operates correctly;

l) the alarm device (if fitted) when activated operates correctly (see A.6);

m) the mechanical blocking device is provided and effective;

n) all notices, etc., are correctly displayed.

© ISO 2000 – All rights reserved

In addition, measure and record:

— the electrical supply voltage during the test;

— the electrical control voltage during the test;

— the motor operating current when carrying rated load in both directions of travel (see Note);

— the type of motor overload protection provided;

— the motor stall current and tripping time for the motor overload device;

— the stopping distance of the lifting platform when carrying rated load in both directions of travel (see Note);

— the motor reversal time delay.

NOTE Measurement of running current and stopping distance at full load may be carried out off site.

© ISO 2000 – All rights reserved

Annex C
(informative)

Recommendations for the provision and use of specially adapted operating devices, switches and sensors

C.1 Operating devices

C.1.1 It is recommended that the operation of the lifting platform is by means of conventional pushbuttons, joysticks or similar devices, except where these are unsuitable due to the disability of the user.

C.1.2 In such cases, the operating device placement, whether on a wall, wheelchair, pendant, etc., should be such that accidental operation by the user is minimized.

C.1.3 Regardless of the type of operating switches/devices used, an on/off safety switch shall be fitted on the lifting platform in accordance with 8.15.5. Additional stopping devices, which are either specially adapted switches or remotely controlled, may also be fitted.

C.1.4 It is recommended that the output states of the operating switches are electrically/electronically monitored, such that if a fault condition exists, whereby a set of contacts are held closed for greater than a predetermined period, then a stopping device will prevent any further operation of the platform until a competent person repairs the fault. Such a monitor circuit can be part of a motor run time limiter, whose incorporation is also recommended. A suggested 'predetermined period' would be the time required for the full upward lift travel at rated load plus a maximum of 30 s.

C.2 Specially adapted switches

C.2.1 Where switches such as low force switches, blowpipe operated switches and pull-cords are used, the design should be such that their immunity to electrical and mechanical interference will prevent accidental operation of the platform.

C.2.2 A device which ensures that the switch has been operated for greater than 0,5 s before the (electrical) command is accepted by the platform controller should be used in order to minimize the effects of electrical interference on touch switches and accidental operation of mechanically sensitive switches.

C.2.3 The switch should switch and, where appropriate be powered by, only extra-low voltages (less than 25 V).

C.2.4 Such a switch may be used to stop the lift if required, in addition to the stopping devices referred to in C.1.3. In this case, C.2.2 is not applicable.

C.2.5 The switch should be positioned at an optimum location for ease of use by the disabled user.

C.3 Sensors

Sensors such as infrared, ultrasonic, microwave movement detectors and pressure mats should not be used to control the platform. If the disability of the user is such that an adapted switch or a remote control device cannot be operated, then the assistance of others should be sought.

© ISO 2000 – All rights reserved

Annex D
(informative)

In-use periodic examinations, tests and servicing

D.1 Periodic examinations and tests

The lifting platform should be thoroughly examined within 6 months of commissioning or completion of major modifications, and thereafter at intervals not exceeding 12 months, particular attention being given, upon which a report should be prepared, to the effectiveness of the following features:

a) interlocking devices;

b) electrical safety circuits;

c) earthing continuity;

d) ropes, chains, racks, or screws and nuts (as applicable);

e) driving unit and brakes;

f) safety gear;

g) alarm system (if fitted).

A report of the above examination should be prepared, one copy of which should be handed to the purchaser or purchaser's representative and one copy of which should be retained by the examining authority.

At every examination, the competent person making the examination may advise whether more frequent examinations and servicing will be necessary to ensure continued safety and operation.

If defects are reported the recommended repair, and the period within which the repair should be executed, should also be stated.

D.2 Test and examination after major modifications

If any major modifications are carried out on the lifting platform, the procedure specified in 11.1 should be repeated.

If any defect affecting safety is reported and immediate repair is necessary, the lifting platform should be taken out of service and the user advised.

© ISO 2000 – All rights reserved

In particular, the following are considered as being major modifications:

a) change of rated speed;

b) change of safe working load;

c) change of platform;

d) change of travel;

e) change of position or type of driving unit;

f) change of interlocks, control or safety circuits;

g) change of any safety sensitive edges or surfaces.

D.3 Servicing

The lifting platform and its accessories should be maintained in good working order. To this end, regular servicing by a competent person should be carried out at the same frequency as that specified in D.1. Particular attention should be paid to any alarm system batteries.

© ISO 2000 – All rights reserved

Annex E
(informative)

Example of certificate of acceptance by purchaser/user after initial tests and examination

We being the purchaser/user of this lifting platform (Serial No. .....) have received, and fully understood, verbal and written instructions, in association with a demonstration, from .....

on its correct and safe use.

Signature:

Date:

Address:

© ISO 2000 – All rights reserved

Annex F
(normative)

Safety circuits — Requirements for circuit design and component and circuit fault analysis

F.1 Introduction

A number of faults of the electric equipment of the lifting platform may be envisaged. During failure analysis, some faults can be excluded under certain conditions. This annex describes these conditions and gives the requirements on how to fulfil them.

F.2 Failure exclusions: Conditions

Table F.1 shows

a) a list of the major and most usual components used in present electronic technology; the components have been grouped by “families”:

- — passive components 1
- — semi-conductors 2
- — miscellaneous 3
- — assembled printed circuits 4

b) a number of identified failures:

- — interruption I
- — short circuit II
- — change value to higher value III
- — change value to lower value IV
- — change of function V

c) the possibility and conditions of failure exclusion.

The first condition for failure exclusion is that components shall always be used within their own worst-case limits, even in the worst-case conditions specified by International Standards, in the field of temperature, humidity, voltage and vibrations.

© ISO 2000 – All rights reserved

F.3 Design guidelines

The danger comes from the possibility of bridging one or several safety contacts by local interruption of common lead (earth) combined to one or several other failures. The following recommendations should be given to avoid dangerous situations in the case when information is collected from the safety chain for control purposes, for remote control, alarm control, etc.

a) Design the board and circuits with distances in accordance with specifications 3.1 and 3.6 of Table F.1.

b) Organize a common lead so that the lifting platform control common lead comes behind the electronic components. Any rupture will cause a non-operation of the control. (Danger exists that changes in wiring occur during the life of the lifting platform.)

c) Always make calculations about the worst-case condition. (What comes out if .....? Is the current originated by all combinations of possible failures high enough to keep the contactors on?)

d) Always use outside (out of element) resistors since protective devices of input elements internal resistor of the device should not be considered as safe.

e) Use only components according to listed specifications.

f) Consider backwards voltage coming from electronics. The use of galvanically separated circuits can solve the problems in some cases.

g) The worst-case calculation cannot be avoided, whatever the design. If modifications or additions are made after the lifting platform is installed, the worst-case calculation, involving new and existing equipment, shall be carried out again.

h) Some failure exclusions may be accepted, according to Table F.1.

i) Failures outside the lifting platform environment need not be taken into consideration.

An interruption of the earth from the main power supply of the building to the controller collection earth bar (rail) may be excluded, providing the installation is made in accordance with IEC 60364-5-54.

F.4 Electronic components: Failure exclusion

The faults to be considered are as listed in 8.11.1.

Failure exclusion shall only be considered provided that components are applied within their worst-case limits of characteristics, value, temperature, humidity, voltage and vibrations.

In Table F.1:

— “NO” in the cell means failure is not excluded; i.e. it shall be considered;

— an unmarked cell means that the identical fault type is not relevant.

© ISO 2000 – All rights reserved

Table F.1 — Failure exclusions

Component	Possible failure exclusion					Conditions	Remarks
	Open circuit	Short circuit	Change to higher value	Change to lower value	Change of function		
1 Passive components							
1.1 Resistor fixed	NO	a)	NO	a)		a) Only valid for film resistors with varnished or sealed resistance film and axial connection according to the applicable IEC standards, and for wire-wound resistors if they are made of a single-layer winding protected by enamel or sealed.	
1.2 Resistor variable	NO	NO	NO	NO			
1.3 Resistor, non-linear NTC, PTC, VDR, IDR	NO	NO	NO	NO			
1.4 Capacitor	NO	NO	NO	NO			
1.5 Inductive components: – coil – components	NO	NO	—	NO			
2 Semiconductors							
2.1 Diode, LED	NO	NO			NO		Change of function refers to a change in reverse current value.
2.2 Zener diode	NO	NO		NO	NO		Change to lower value refers to change in Zener voltage. Change of function refers to change in reverse current value.
2.3 Thyristor, Triac, GTO	NO	NO			NO		Change of function refers to self-triggering or latching of components.
2.4 Optocoupler	NO	a)			NO	a) May be excluded under condition that the optocoupler is in accordance with IEC 60747-5, and the isolation voltage is at least in accordance with IEC 60664-1:1992, Table 1.	Open circuit means open circuit in one of the two basic components (LED and photo transistor). Short circuit means short circuit between them.
2.4 Optocoupler						Voltage phase to earth derived from rated system voltage up to and including V(r.m.s.) and c.d 300 600 1 000	Preferred series of impulse withstand voltages in volts for installation category III 4 000 6 000 8 000
2.5 Hybrid circuits	NO	NO	NO	NO	NO		

© ISO 2000 – All rights reserved

Table F.1 *(continued)*

Component	Possible failure exclusion					Conditions	Remarks
	Open circuit	Short circuit	Change to higher value	Change to lower value	Change of function		
2.6 Integrated circuits	NO	NO	NO	NO	NO		Change of function to oscillation "and" gates becoming "or" gates, etc.
3 Miscellaneous							
3.1 Connectors Terminals Plugs	NO	a)				a) Short circuit can be excluded provided the minimum creepage and clearance distances as defined in 8.5.2 have been adhered to.	
3.2 Neon bulb	NO	NO					
3.3 Transformer	NO	a)	b)	b)		a), b) May be excluded under condition that isolation voltage between windings and core is in line with IEC 60742 and the working voltage is the highest possible voltage in Table 6 between live and earth.	Short circuits include short circuits of primary or secondary windings, or between primary and secondary coils. Change in value refers to change of ratio by partial short circuit in a winding.
3.4 Fuse		a)				a) May be excluded if the fuse is correctly rated, and constructed according to the applicable IEC standards.	Short circuit means short circuit of the blown fuse.
3.5 Relay	NO	a) b)				a) Provided the relay device conforms to the requirements of 8.3, short circuits between the coil and contacts and between the contacts. b) Welding of contacts cannot be excluded.	
3.6 Printed circuit board (PCB)	NO	a)				a) Short circuit may be excluded provided the minimum creepage and clearance distances as defined in 8.5.2 have been adhered to.	
4 Assembly of components on printed circuit board (PCB)	NO	a)				a) Short circuit may be excluded provided the minimum creepage and clearance distances as defined in 8.5.2 have been adhered to.	

© ISO 2000 – All rights reserved

Annex G
(informative)

Summary of different requirements for restricted/public access

Subclause
Introduction
8.5.1
8.14.3
8.17.1
9.1.1.3.4
9.1.1.4.3 a)
9.2.1.2
9.2.1.3
9.2.1.4
10.1.1.4.2
10.2.2
12 i)
13.9

© ISO 2000 – All rights reserved

Bibliography

[1] ISO 1219-1, *Fluid power systems and components — Graded symbols and circuit diagrams — Part 1: Graphic symbols.*

[2] ISO 9085-1, *Calculation of load capacity of spur and helical gears — Part 1: Applications standard for industrial gears, detailed method.*

[3] ISO/TR 9527, *Building construction — Needs of disabled people in buildings — Design guidelines.*

© ISO 2000 – All rights reserved

ICS 11.180; 91.140.90

Price based on 67 pages

© ISO 2000 – All rights reserved