INTERNATIONAL STANDARD

ISO 8990

First edition
1994-09-01

Thermal insulation — Determination of steady-state thermal transmission properties — Calibrated and guarded hot box

Isolation thermique — Détermination des propriétés de transmission thermique en régime stationnaire — Méthodes à la boîte chaude gardée et calibrée

Reference number
ISO 8990:1994(E)

Contents

Page

Section 1 General **1**

1.1 Scope **1**

1.2 Normative reference **1**

1.3 Definitions **2**

1.4 Symbols, units and relationships **2**

1.5 Principle **2**

1.6 Limitations and sources of errors **4**

Section 2 Apparatus **8**

2.1 Introduction **8**

2.2 Design requirements **8**

2.3 Metering box **9**

2.4 Guard box **9**

2.5 Specimen frame **10**

2.6 Cold side chamber **10**

2.7 Temperature measurements **10**

2.8 Instrumentation **11**

2.9 Performance evaluation and calibration **11**

Section 3 Test procedure **13**

3.1 Introduction **13**

3.2 Conditioning of specimen **13**

3.3 Specimen selection and mounting **13**

3.4 Test conditions **14**

3.5 Measurement periods **14**

3.6 Calculations **14**

3.7 Test report **14**

© ISO 1994
All rights reserved. Unless otherwise specified, no part of this publication may be reproduced or utilized in any form or by any means, electronic or mechanical, including photocopying and microfilm, without permission in writing from the publisher.

International Organization for Standardization
Case Postale 56 • CH-1211 Genève 20 • Switzerland

Printed in Switzerland

Annexes

A Heat transfer at surfaces and environmental temperatures **16**

B Bibliography **19**

Foreword

ISO (the International Organization for Standardization) is a worldwide federation of national standards bodies (ISO member bodies). The work of preparing International Standards is normally carried out through ISO technical committees. Each member body interested in a subject for which a technical committee has been established has the right to be represented on that committee. International organizations, governmental and non-governmental, in liaison with ISO, also take part in the work. ISO collaborates closely with the International Electrotechnical Commission (IEC) on all matters of electrotechnical standardization.

Draft International Standards adopted by the technical committees are circulated to the member bodies for voting. Publication as an International Standard requires approval by at least 75 % of the member bodies casting a vote.

International Standard ISO 8990 was prepared by Technical Committee ISO/TC 163, *Thermal insulation*, Subcommittee SC 1, *Test and measurement methods*.

Annex A forms an integral part of this International Standard. Annex B is for information only.

Introduction

Data on the thermal transmission properties of insulants and insulated structures are needed for various purposes including judging compliance with regulations and specifications, for design guidance, for research into the performance of materials and constructions and for verification of simulation models.

Many thermal insulating materials and systems are such that the heat transfer through them is a complex combination of conduction, convection and radiation. The methods described in this International Standard measure the total amount of heat transferred from one side of the specimen to the other for a given temperature difference, irrespective of the individual modes of heat transfer, and the test results can therefore be applied to situations when that is the property required. However, the thermal transmission properties often depend on the specimen itself and on the boundary conditions, specimen dimensions, direction of heat transfer, temperatures, temperature differences, air velocities, and relative humidity. In consequence, the test conditions must replicate those of the intended application, or be evaluated if the result is to be meaningful.

It should also be borne in mind that a property can only be assessed as useful to characterize a material, product or system if the measurement of the steady-state thermal transmission properties of the specimen and the calculation or interpretation of the thermal transmission characteristics represent the actual performance of the product or system.

Further, a property can only be characteristic of a material, product or system if the results of a series of measurements on a number of specimens from several samples provide sufficient reproducibility.

The design and operation of the guarded or calibrated hot box is a complex subject. It is essential that the designer and user of such apparatus has a thorough background knowledge of heat transfer, and has experience of precision measurement techniques.

Many different designs of the calibrated and the guarded hot box exist worldwide conforming to national standards. Continuing research and development is in progress to improve apparatus and measurement techniques. Also the variation of structures to be tested may be so great, and the requirements for test conditions so different, that it would be a mistake to restrict the test method unnecessarily and to confine all measurements to a single arrangement. Thus it is not practical to mandate a specific design or size of apparatus.

Thermal insulation — Determination of steady-state thermal transmission properties — Calibrated and guarded hot box

Section 1: General

1.1 Scope

This International Standard lays down the principles for the design of the apparatus and minimum requirement that shall be met for determination of the laboratory steady-state thermal transmission properties of building components and similar components for industrial use. It does not, however, specify a particular design since requirements vary, particularly in terms of size, and also to a lesser extent in terms of operating conditions.

This International Standard describes also the apparatus, measurement technique and necessary data reporting. Special components, for example windows, need additional procedures which are not included in this International Standard. Also excluded are measurements of the effect on heat flow of moisture transfer or redistribution but consideration shall be given in the design and operation of the equipment as to the possible effect of moisture transfer on the accuracy and the relevance of test results. The properties which can be measured are thermal transmittance and thermal resistance. Two alternative methods are included: the calibrated hot box method and the guarded hot box method. Both are suitable for vertical specimens such as walls and for horizontal specimens such as ceilings and floors. The apparatus can be sufficiently large to study full-scale components.

The methods are primarily intended for laboratory measurements of large, inhomogeneous specimens, although homogeneous specimens can, of course, also be tested, and these are necessary for calibration and validation.

When testing homogeneous specimens in accordance with this International Standard, experience has shown that an accuracy within ± 5 % can generally be achieved. However, the accuracy of each individual apparatus shall be estimated with reference homogeneous specimens of thermal conductance extending over the range to be measured using the apparatus.

The estimation of accuracy for nonhomogeneous specimens will be more complex and involve an analysis of the heat flow mechanism in the particular types of inhomogeneous specimens being tested. Such analyses are not covered by this International Standard.

The method does not provide for measurements where there is mass transfer through the specimen during the test.

1.2 Normative reference

The following standard contains provisions which, through reference in this text, constitute provisions of this International Standard. At the time of publication, the edition indicated was valid. All standards are subject to revision, and parties to agreements based on this International Standard are encouraged to investigate the possibility of applying the most recent edition of the standard indicated below. Members of IEC and ISO maintain registers of currently valid International Standards.

ISO 7345:1987, *Thermal insulation — Physical quantities and definitions.*

1.3 Definitions

For the purposes of this International Standard, the following definitions apply.

1.3.1 mean radiant temperature, T_r: Appropriate weighting of the temperatures of surfaces "seen" by the specimen for the purpose of determining the radiant heat flow rate to the surface of the specimen (see annex A).

1.3.2 environmental temperature, T_n: Appropriate weighting of air and radiant temperatures, for the purpose of determining the heat flow rate to the surface of the specimen (see annex A).

1.4 Symbols, units and relationships

The following recommended symbols are used:

i	Interior, usually hot side	
e	Exterior, usually cold side	
s	Surface	
n	Environmental	
λ	Thermal conductivity	[W/(m·K)]
R	Thermal resistance	[(m²·K)/W]
U	Thermal transmittance	[W/(m²·K)]
h	Surface coefficient of heat transfer	[W/(m²·K)]
Φ	Heat flow rate	[W]
Φ_p	Total power input, heating or cooling	[W]
Φ_1	Heat flow rate through specimen	[W]
Φ_2	Imbalance, heat flow rate parallel to specimen	[W]
Φ_3	Heat flow rate through metering box walls	[W]
Φ_4	Flanking loss, heat flow rate flanking specimen	[W]
Φ_5	Peripheral loss, heat flow rate, parallel to specimen surface at the edges of the specimen	[W]
A	Area perpendicular to heat flow	[m²]
q	Density of heat flow rate	[W/m²]
d	Specimen thickness	[m]
T_a	Air temperature	[K]
T_r	Mean radiant temperature	[K]
T_n	Environmental temperature	[K]
T_s	Surface temperature	[K]

$R_s = A(T_{si} - T_{se})/\Phi_1$

$R_s = 1/h$

$R_{si} = A(T_{ni} - T_{si})/\Phi_1$

$R_{se} = A(T_{se} - T_{ne})/\Phi_1$

$R_u = 1/U$

$U = \Phi_1/A(T_{ni} - T_{ne})$

$\Phi_1 = \Phi_p - \Phi_3 - \Phi_2$ [for guarded hot box]

$\Phi_1 = \Phi_p - \Phi_3 - \Phi_4$ [for calibrated hot box]

NOTE 1 This method does not directly measure the thermal conductivity although it can be derived in case of opaque, homogeneous, flat specimens using the relationship $\lambda = d/R_s$.

1.5 Principle

1.5.1 General

Both types of apparatus, the guarded hot box (GHB) and the calibrated hot box (CHB), are intended to reproduce conventional boundary conditions of a specimen between two fluids, usually atmospheric air, each at uniform temperature.

The specimen is placed between a hot and a cold chamber in which environmental temperatures are known.

Measurements are made at steady-state of air and surface temperatures and of the power input to the hot side chamber. From these measurements the thermal transfer properties of the specimen are calculated. Heat exchange at the surfaces of the test specimen involves both convective and radiative components. The former depends upon air temperature and air velocity, and the latter depends upon the temperatures and the total hemispherical emittances of specimen surfaces and of surfaces "seen" by the test specimen surface. The effects of the heat transfer by convection and radiation are combined in the

concept of an "environmental temperature" and a surface heat transfer coefficient.

Thermal transmittance is defined between two environmental temperatures, and therefore suitable temperature measurements are required to enable these to be determined. This is particularly important with test specimens of low thermal resistance for which the surface coefficients of heat transfer form a significant fraction of the total resistance. In case of test specimens with a moderate to high thermal resistance, it may be sufficient to record air temperatures only during a test, if it can be shown that the difference in air and radiant temperatures on either side of the test specimen is so small that the accuracy requirements are met.

A special situation arises when the hot box has a radiant panel, close to the warm side of the specimen, as heat supply. In this case the radiant component will be more dominant in the heat transfer to the specimen surface. This method with radiant panel can be used to measure the thermal resistance of the specimen but is not suitable for direct measurements of the thermal transmittance, at conventional surface coefficients.

1.5.2 Guarded hot box

In the guarded hot box (see figure 1), the metering box is surrounded by a guard box in which the environment is controlled to minimize lateral heat flow in the specimen, Φ_2, and heat flow through the metering box walls, Φ_3. Ideally, when a homogeneous specimen is mounted in the apparatus and when both inside and outside the metering box the temperatures are uniform and furthermore when cold side temperatures and surface coefficients of heat transfer are uniform, a temperature balance for air both inside and outside the metering box would imply a balance on the specimen surface and vice versa, i.e. $\Phi_2 = \Phi_3 = 0$. The total heat flow through the specimen will then be equal to the heat input to the metering box.

In practice, for each equipment and each specimen under test, there will be a limit in detecting imbalance (imbalance resolution, see 1.6.1.1).

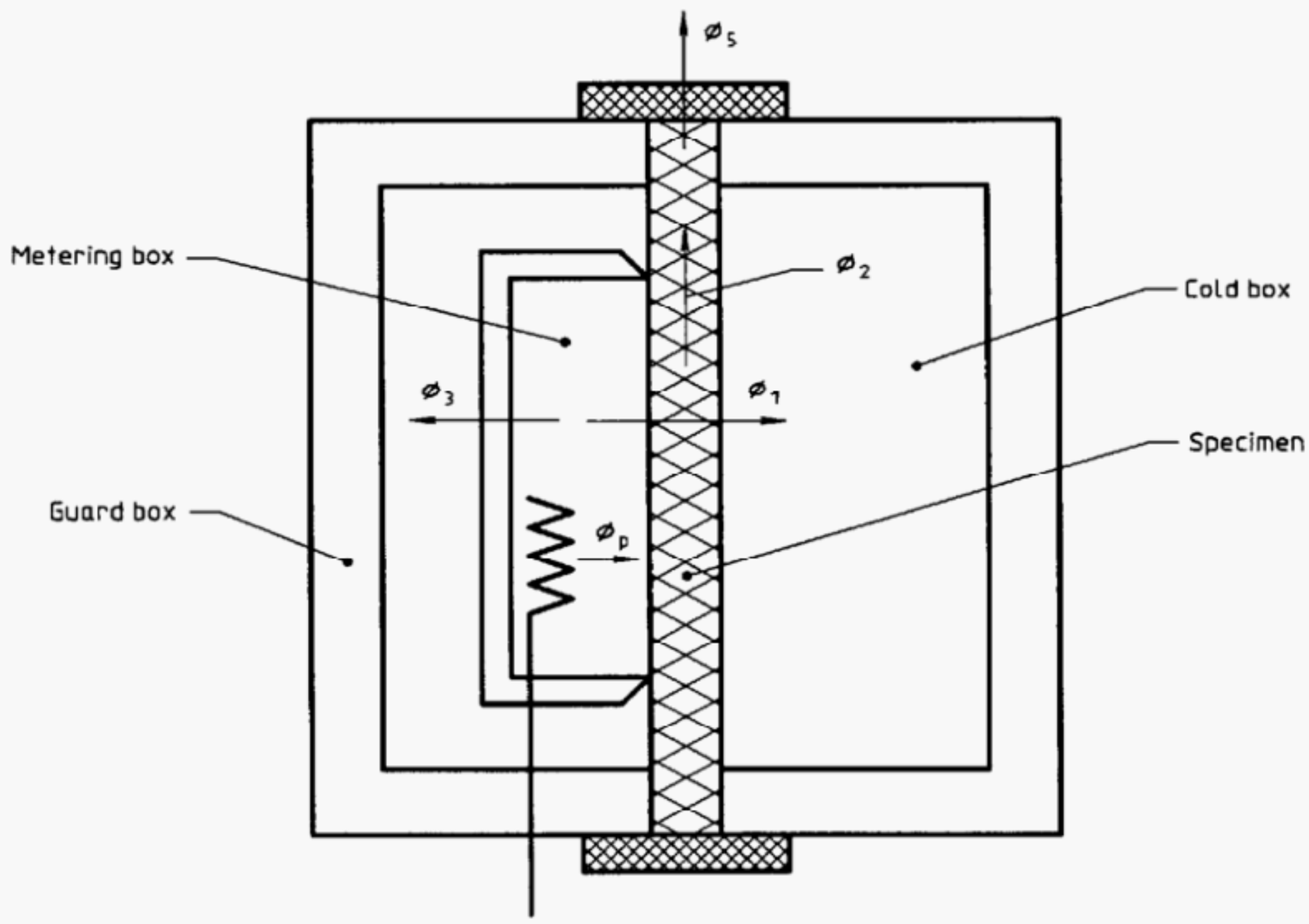

Figure 1 — Guarded hot box

1.5.3 Calibrated hot box

The calibrated hot box (see figure 2) is surrounded by a temperature-controlled space not necessarily at the same air temperature as that inside the metering box. The heat losses through the box walls, Φ_3, are kept low by using a construction of high thermal resistance. The total power input, Φ_p, shall be corrected for the wall losses, Φ_3, and for the flanking losses, Φ_4. The flanking heat flow path is illustrated in figure 3, which shows details of the specimen and specimen frame with the adjacent hot and cold side box walls. The correction for box wall losses and flanking losses are determined by tests on calibration specimens of known thermal resistance. For flanking loss calibration, the calibration specimens should cover the same thickness and thermal resistance range as the specimens to be measured and the temperature range of intended use.

1.6 Limitations and sources of errors

The operation of the apparatus, to a certain desired accuracy, is limited by a number of factors related to equipment design, calibration and operation and specimen properties, e.g. thickness, thermal resistance and homogeneity.

1.6.1 Limitations and errors due to apparatus

1.6.1.1 Limitations in imbalance resolution in a guarded hot box

In practice, even with homogeneous specimens, local surface coefficients of heat transfer are not uniform, especially close to the borders of the metering box. As a consequence, neither the specimen surface-temperature nor the air temperature are uniform close to the periphery of the metering box both inside and outside. This has two consequences:

a) It can be impossible to reduce to zero at the same time both the lateral heat flow, Φ_2, through the specimen, and the heat flow, Φ_3, through the metering box walls;

b) The temperature nonuniformity close to the metering box, on the specimen surface, and in the air, respectively, define the corresponding best imbalance resolution.

The apparatus shall be designed and operated in such a way as to obtain optimum heat flow balance as indicated in a) above, i.e. apparatus geometry and guard air space and air flow speed so that Φ_3 does not exceed 10 % of Φ_p.

Inhomogeneities in the specimen will enhance nonuniformities in local surface coefficients and in specimen surface-temperatures. Heat flow imbalance through the metering box wall and in the specimen shall be evaluated, and when necessary corrected for. For this purpose the metering box walls shall be equipped to serve as a heat flowmeter. Additionally, a thermopile across the metering area periphery can be mounted on the specimen surfaces. In routine testing, imbalance detection can be simplified by calibration and calculation.

1.6.1.2 Size of metered area

The metering area is defined:

a) for a guarded hot box, as the centre-nose to centre-nose when the specimen is thicker or equal to the nose width, or if the specimen is thinner than the nose width, as the inner periphery of the nose;

b) for a calibrated hot box, as the inner periphery of the metering box.

The size of the metered area determines the maximum thickness of the specimen. The ratios of the metering area side to the specimen thickness and of the guard width to the specimen thickness are governed by principles similar to those for the guarded hot box.

The size of the specimen can also limit possibilities for a representative section of the construction to be tested and thus allow errors and difficulties in interpretation of the result.

Measurement errors in testing to the hot box methods are in part proportional to the length of the perimeter of the metering area. The relative influence of this diminishes as metering area is increased. In the guarded hot box, the minimum size of the metered area is 3 times specimen thickness or 1 m × 1 m, whichever is the greater.

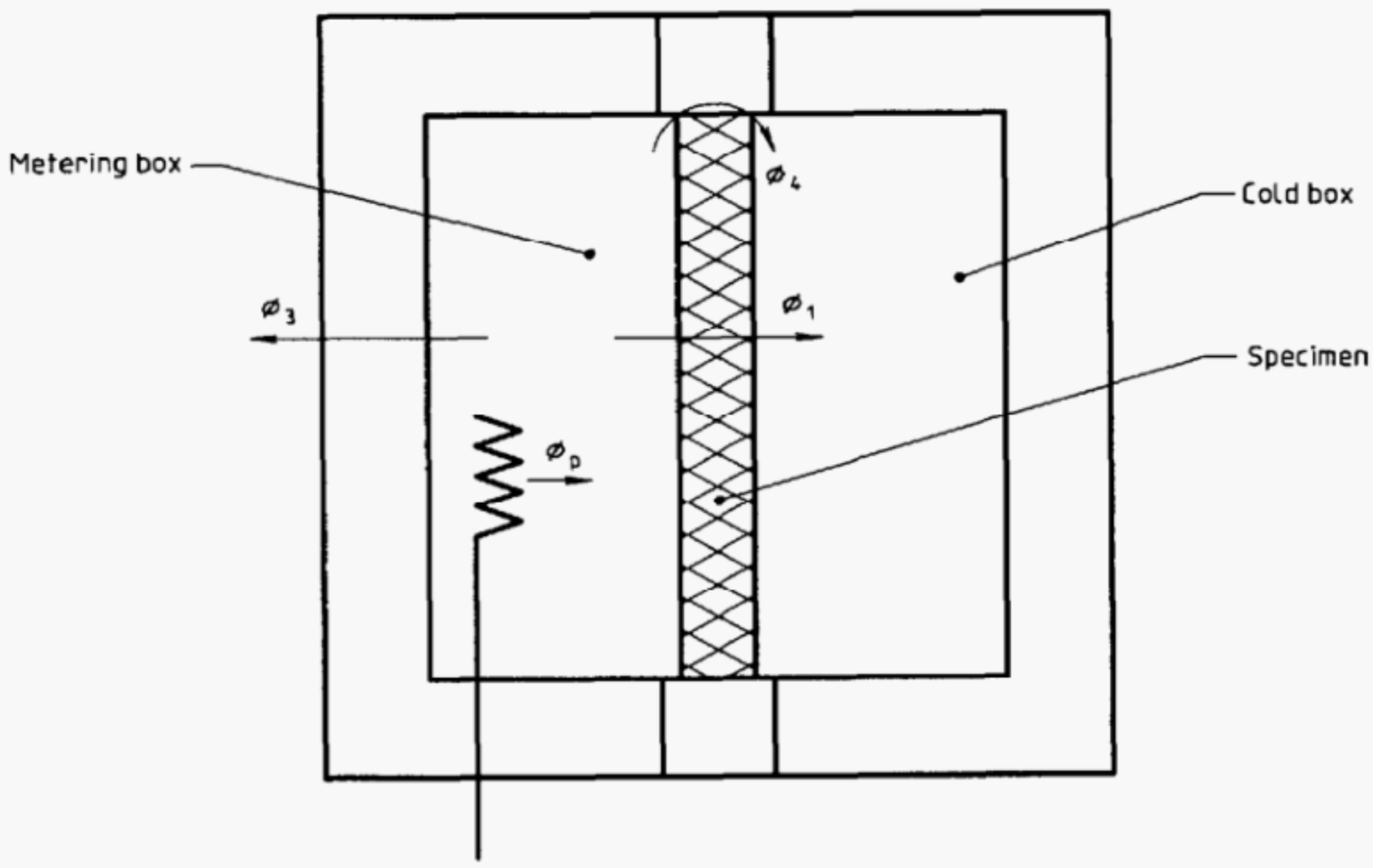

Figure 2 — Calibrated hot box

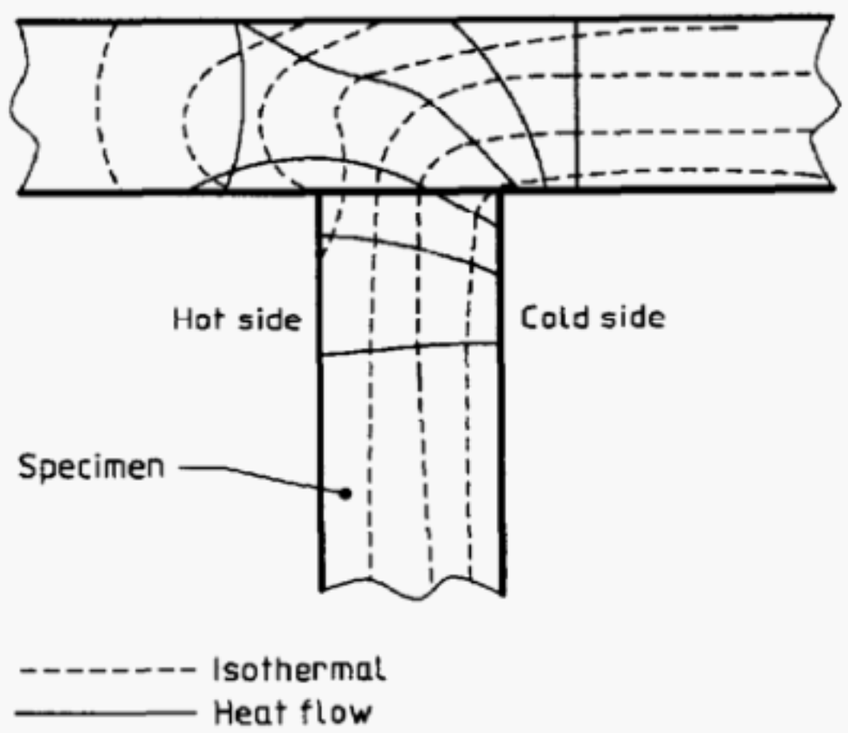

Figure 3 — Heat flow path in specimen and frame

For the calibrated hot box, minimum specimen size is 1,5 m × 1,5 m.

The perimeter error in the guarded hot box is due to the heat flow rate, Φ_2, along the surface of the specimen, due to imbalance between metering and guarded area, or by inhomogeneities. The perimeter errors in the calibrated hot box are due to the flanking heat flow, Φ_4, which includes the distortion of the heat flow rate at the edges of the specimen.

1.6.1.3 Minimum power input

Total power input, Φ_p, to the metering box is the sum of the power supplied to heaters, fans, transducers, actuators, etc. Some of these cannot be reduced to zero thus defining a minimum heat flow which has to pass through the specimen.

This limit can be lowered by cooling the hot chamber, but that will cause further uncertainty connected with the measurement accuracy of the cooling rate.

The minimum power is also limited by the uncertainty of total power input to the metering box including Φ_3.

All the above factors set a lower limit for the ratio $(T_{si} - T_{se})/R_u$.

1.6.1.4 Maximum power input

Maximum power input is limited by required temperature uniformity and surface coefficients. Large heat flowrates imply large air mass flow across the specimen surface if a high degree of air temperature uniformity is to be maintained; this will affect the heat transfer mechanism of the surface. In the case of the guarded hot box decreasing the specimen resistance, this imposes stricter requirements on the equivalence of convective and radiative heat transfer in the metering and guard box to obtain a given accuracy.

1.6.2 Limitations and errors due to specimen

1.6.2.1 Specimen thickness and thermal resistance

For a given apparatus design, specimen thickness can be limited for reasons depending upon specimen properties and boundary conditions, an upper limit for the thickness is due to edge losses, Φ_5, or flanking losses, Φ_4, which, although decreasing with increasing specimen thickness, can become significant in comparison to Φ_1 and degrade measurement accuracy.

1.6.2.2 Specimen inhomogeneity

Most test specimens representative of building and industrial components will generally be inhomogeneous. Inhomogeneities in the test specimen will affect the pattern of the density of heat flowrate in such a manner that it is neither one-dimensional nor uniform. Also variations of the thickness throughout the specimen can cause significant local modifications of the pattern of the density of heat flowrate. The effects of these are nonuniformities in temperatures and local transfer coefficients making the following more difficult or even impossible:

a) the definition of a mean surface temperature;

b) the detection of imbalance in the guarded hot box apparatus;

c) the definition of the metering area;

d) the error analysis of test results for a given inhomogeneous specimen.

Specific examples include:

a) facings having a high thermal conductivity. These form easy paths for imbalance heat flow rate, Φ_2, and flanking heat losses, Φ_4. It can help to cut the facing along the metering box periphery. When layers are homogeneous, an alternative solution is to run independent tests on each layer with test methods using a guarded hot plate or a heat flow meter;

b) horizontal and vertical structural members like studs. Their effect is in most cases symmetrical;

c) sections of the specimen made of different materials. The temperature differences through the materials are not the same. A heat flow exists close to the interface of the different materials. When this interface is not far from the metering box periphery, this implies a temperature nonuniformity that affects both imbalance detection and the ambiguity in the definition of the metering area. Also, local heat transfer coefficients are affected by these inhomogeneities;

d) cavities within the specimen. Natural convection can create an unknown imbalance heat flow rate, Φ_2. The effect of installing barriers shall be evaluated.

It is not possible to provide immediate solutions to all types of problems. The operator is advised to be fully aware of te effects of anomalies.

Calculations of the importance and effects if inhomogeneities are of great help to predict the thermal performance of the test specimen. If significant differences exist between predicted and measured specimen performance which cannot be explained, as a minimum requirement, where such divergences exist, a careful inspection of the specimen should be performed to identify any difference between actual and specified sizes, dimensions, materials, etc. Any irregularities from the original specification shall be reported.

1.6.2.3 Moisture content in specimen

Moisture transfer during the test may have a significant effect on test results. It is not possible to specify a standard pre-test conditioning. As a minimum requirement, the method of conditioning shall be reported. For most specimens, it is normally impossible, without derating measurement accuracy to an unacceptable level, to reduce temperature differences so much that moisture transfer is so slow that steady-state mass transfer can be assumed during measurement time. It should also be realized that not only moisture transfer through the specimen, but also moisture redistribution in the specimen and phase change, will affect the results.

1.6.2.4 Temperature correlation

Specimen thermal resistances or thermal transmittances are often a function of temperature differences across the specimen itself. Care shall then be taken in reporting and interpreting measurement results.

Section 2: Apparatus

2.1 Introduction

As stated in 1.1, it is impractical to impose specific design details for an apparatus. However, this section gives mandatory requirements and the aspects which must be considered.

Figures 1 and 2 show typical arrangements of the test specimen and major elements of the apparatus. Figures 4 and 5 show alternative arrangements. Other arrangements, accomplishing the same purpose, may be used. The effect on the heat transfer through the specimen of the box walls in figure 1 and of the frame in figure 2 depends upon the wall or frame shape and material, upon the specimen thickness and resistance and such test conditions as temperature differences and air velocities. The apparatus design and construction should be made compatible with the expected types of specimen to be tested and expected testing conditions.

2.2 Design requirements

The size of the apparatus shall be commensurate with the intended use, taking the following points into consideration.

The metered area shall be big enough to provide a representative test area. For modular components the metered area should preferably span exactly an integral number of modules.

The ratio of metered area to perimeter of the metered area influences accuracy in both types of boxes because one-dimensional heat flow cannot be maintained at the perimeter of the metered area. These error heat flows at the perimeter of the metered area, measured as a fraction of the metered heat flow, will increase with decreasing metered area.

Imbalance heat flow, Φ_2, in the guarded hot box is due to nonuniformities both in surface coefficients and air temperatures close to the periphery of the metered area.

An amount of heat enters the specimen through the nose of the metering box in the guarded hot box. Deviation from one-dimensional heat flow is caused by the finite thickness of the nose seal.

Both edge insulation and edge boundary conditions affect peripheral losses, Φ_5, for the guarded hot box and flanking losses, Φ_4, for the calibrated hot box.

All these problems are made more complex by nonhomogeneities in the specimen close to the perimeter of the metered area.

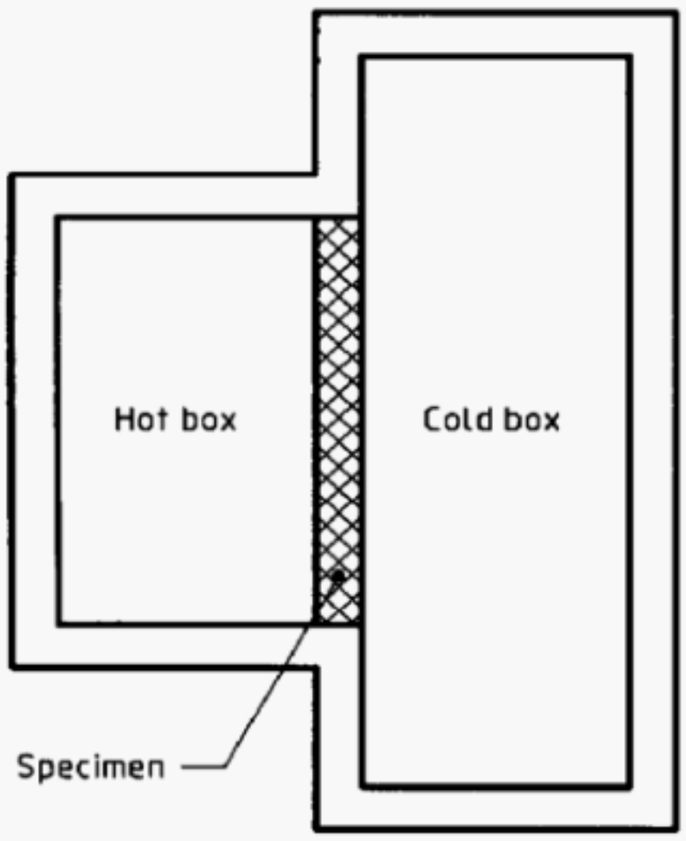

Figure 4

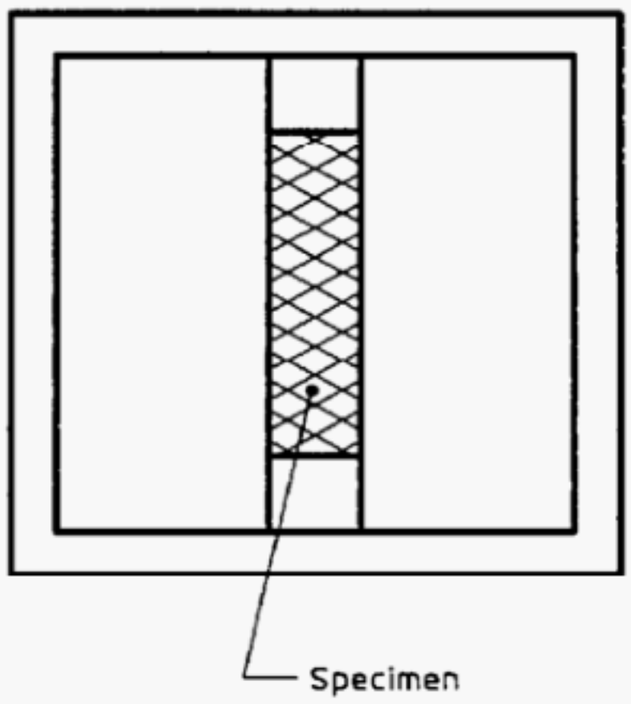

Figure 5

In general, the size of the metering box determines the minimum size of other elements of the apparatus. The depth of the metering box should not be greater than that strictly necessary to maintain desired boundary conditions (desired boundary layer thickness, etc.) and to accommodate its equipment.

The emittance of surfaces which have radiative exchange with the specimen surfaces can be either high or low. High emissivity (0,8 or greater) will in most cases be typical of actual use of building and industrial components.

The low emissivity environment requires a greater convective component, such as higher velocities, to achieve conventional surface coefficients. This produces a substantial change in the distribution of the surface coefficient which can give better temperature uniformity, but this situation can produce an artificial thermal behaviour substantially different from actual use. In particular, it is unsuitable for specimens with permeable surfaces.

2.3 Metering box

2.3.1 Box wall construction

The insulation of the box wall shall be chosen considering the intended range of specimen resistance and temperature difference so that an error in the evaluation of the metering box losses does not affect the determination of the specimen heat flow by more than 0,5 %. Box walls shall be thermally uniform to aid in achieving uniform temperatures inside the box and to aid in determining the heat flow through the walls using a thermopile or other type of heat flow sensor.

In addition, it shall be recalled that hot spots, such as heaters, fans, etc., can affect the uniformity of the temperatures inside the box, owing to their local radiative exchanges with the box walls.

The box walls can be made from panels of a suitable insulating material, e.g. a sandwich with a core of cellular plastic and a suitable facing.

The box walls, perimeter seal and specimen shall form an air- and water-vapour-tight enclosure to avoid errors due to air and moisture transfer.

In the guarded hot box configuration, the metering box is held against the specimen to provide an airtight joint. The width of the gasket on the nose of the box shall not exceed 2 % of the metering width or 20 mm.

2.3.2 Heat supply and air circulation

Heat supply and air circulation shall be such that variations in air temperature across the air flow parallel to the specimen surface shall not exceed 2 % of the air-to-air temperature difference from hot to cold side. Any air temperature gradients along the air flow shall not exceed 2 K/m, measured outside the boundary layer on a homogeneous test specimen.

Electric resistance heaters are normally the most suitable; they shall be shielded by insulated reflective shields to minimize radiation to metering box walls and the specimen.

It is recommended that a baffle be positioned in the metering box, parallel to the surface of the specimen when forced convection is used. The baffle should extend to the full width of the metering box and have gaps at each end to allow air circulation. The baffle may be moveable, perpendicular to its surface, to aid in adjusting the air velocity parallel to its surface. When natural convection is used, a baffle may be necessary to shield specimen surfaces from radiative heat transfer of heaters.

The considerations in 2.2 regarding emissivity of surfaces also apply to the baffle.

When testing in a vertical position, the circulation resulting from natural convection can be sufficient to ensure temperature uniformity and the desired surface coefficients. When air movement is due to natural convection, the distance between specimen and baffle should be larger than the boundary layer thickness, or no baffle should be used. When it is impossible to achieve the desired conditions with natural convection, circulating fans should be installed. If the fan motors are installed inside the metering box, then their power consumption shall be measured and added to the consumption of the heaters. If only the fans are inside the metering box, the shaft power shall be determined and added to the heater power: this shall be done with an accuracy such that the error on specimen heat flow is less than 0,5 %.

2.4 Guard box

In the guarded hot box the metering box is placed inside a guard box. The purpose of this guard box is to establish such air temperature and surface coefficients around the metering box that heat flow through the metering box walls, Φ_3, and imbalance heat flow, Φ_2, in the surface of the specimen from metered to guard area is minimized.

The relationship between the metering area size and the guard area size and edge insulation shall be such

that when testing a homogeneous specimen of maximum expected resistance and thickness, the predicted error on specimen heat flow caused by peripheral heat loss, Φ_5, shall be smaller than 0,5 % of the metered heat flow, Φ_1. A procedure to quantify this error can be found in ISO 8302.

The requirements concerning emissivity, shielding of heaters, and temperature stability are in principle the same for the guard box as for the metering box. Temperature uniformity shall be such that the influence on imbalance error will be smaller than 0,5 % of the heat flow through the metered area of the specimen.

Circulating fan(s) will normally be needed to avoid stagnant air in the guard box.

2.5 Specimen frame

In the calibrated hot box, the specimen frame is a critical component due to the flanking losses which for the sake of accuracy should be kept at a minimum. There is a compromise between load-carrying capacity, e.g. support of the specimen, and high thermal resistance. The facing towards the specimen should have low thermal transmission.

In the typical configuration of the guarded hot box the specimen frame is omitted and lateral heat flow is minimized by edge insulation. If, however, a specimen frame is used it shall minimize lateral heat flow, as required in 2.4.

2.6 Cold side chamber

The size of cold side chamber is governed by the size of the metering box in the case of the calibrated hot box, or the guard box in the case of the guarded hot box; arrangements may be as illustrated in figures 1, 2, 4 and 5.

The chamber walls should be constructed to reduce the load of the refrigeration equipment and prevent moisture condensation. The inside surfaces of the chamber shall have an emittance in accordance with the desired radiative heat exchange. The requirements concerning emittance, shielding of heaters, temperature stability and temperature uniformity are in principle the same as for the metering box.

For fine tuning of the cold side temperature, electric resistance heaters in the outlet from the evaporator are often useful. As mentioned under the metering box, a baffle may also be advantageous to achieve uniform air distribution. Air flow direction corresponding to natural convection is suggested. Motors, fans, evaporators and heaters shall be radiation-shielded. Air velocities should be adjustable to meet the required surface coefficients of the test and should be measured. In simulating natural conditions for building components, the range can be from 0,1 m/s to 10 m/s.

2.7 Temperature measurements

If possible, the sensors for the measurement of air temperature and specimen surface temperature should be evenly spaced over the specimen area and located opposite each other on the hot and cold side.

Surface temperatures of the equipment "seen" by the specimen shall be investigated to calculate the mean radiant temperature.

The number of sensors for air temperature and surface temperature measurement shall be at least two per square metre and not less than nine, unless other information on the temperature distribution is available.

Air and surface temperature differences over the specimen and surface temperature differences over the metering box walls can be determined by differential measurement in order to improve accuracy.

2.7.1 Specimen surface temperature measurement

These measurements shall be made with sensors chosen and applied to the surface in such a way that the sensors do not change the temperature at the measuring point.

This requirement can be met by thermocouples of wire diameter less than 0,25 mm, with junctions and at least 100 mm of adjoining wire in thermal contact with the surface, along the most isothermal path, using cement or tape of emissivity close to that of the surface.

Surface coefficients should be as close as possible to end use conditions. Information on surface coefficients may be obtained from a test on homogeneous specimens tested in similar conditions. Particular care shall be taken in all cases, in interpreting results.

In the case of nonhomogeneous specimens, the indicated number of sensors will not ensure reliable mean surface temperatures. For moderately inhomogeneous specimens, supplementary sensors shall be applied to each region of varying temperature. The mean surface temperature of each region shall then be weighted proportionally to the area of that region to obtain the mean surface temperature of the specimen.

For very inhomogeneous specimens, this is not possible. In this case, specimen thermal resistance, R_s, cannot be measured, as only the thermal transmittance, U, based on the environmental temperature difference across the specimen, can be defined.

As a guideline to compare nonhomogeneous and very inhomogeneous specimens, the following is proposed. Local differences in surface temperature caused by inhomogeneities exceeding 20 % of the mean surface-to-surface temperature difference should be taken as evidence of such inhomogeneity.

2.7.2 Air temperature measurement

Air temperatures shall be measured with a system having a suitable time constant. Air temperature sensors shall be radiation-shielded, unless it is shown that the difference between shielded and unshielded ones is so small that the accuracy requirements are met.

In natural convection, temperature sensors shall be placed outside the boundary layer, its thickness being a few centimetres in most cases. In turbulent flow, the boundary layer thickness can exceed 0,1 m.

In forced convection, turbulent fully developed flow shall exist between the specimen and the baffle, and sensors shall be placed so as to detect bulk air temperatures (temperature of adiabatic mixing).

2.7.3 Thermopiles

Thermopiles used for monitoring heat flow through the metering box walls shall have junctions mounted in the same way as described for surface temperature sensors and with at least one pair of junctions per 0,25 m^2 surface. This assumes that the density of heat flow rate is uniform over the box walls. The presence of heaters, fans, etc. can affect this uniformity owing to their local radiative exchanges with the box walls and a higher number of junctions can be necessary to obtain the required accuracy.

Similar requirements apply to the thermopile used in the guarded hot box for monitoring imbalance heat flow, Φ_2, in the surface of the specimen between metering and guard area, except that at least one pair of junctions per 0,5 m of perimeter of metered area is required.

The best position for the balancing sensors is a critical problem. They cannot be too close to the nose, as surface temperatures are not uniform along the periphery of the metered area as a consequence of the presence of the nose of the metering box. Nor can they be too distant from the nose, as in the guard area of the specimen surface temperatures are not uniform due to the flanking losses. Additional problems are created by local nonuniformities of surface coefficients of heat transfer. It shall also be recognized that inhomogeneities could have a severe effect on the reliability of the reading from this thermopile.

2.7.4 Surface temperature of equipment

The inside surface temperatures of the equipment shall be measured in the same way as described for specimen surface temperature.

2.7.5 Temperature control

At steady state, the controllers shall keep any random temperature fluctuations and long-term drifts within 1 % of the air-to-air temperature difference over the specimen for at least two consecutive test periods. This requirement applies primarily to metering chamber temperature, and in principle to guard and cold chamber temperatures. In addition, the control system for the guard box temperatures shall not introduce additional errors on imbalance heat flow rate greater than 0,5 % of Φ_1.

2.8 Instrumentation

Temperature differences shall be measured with an accuracy of ± 1 % of air-to-air temperature difference from hot to cold side. It is recommended that the measuring instrument does not add uncertainties greater than 0,05 K. Absolute temperature measurement shall be made with an accuracy of ± 5 % of the air-to-air temperature difference.

The output from balancing thermopiles, power input to heaters, fans, etc. shall be measured with such accuracy that added error in the measurement of the specimen heat flow, Φ_1, due to instrumentation accuracy will be smaller than 1,5 % (see also the requirements for the measurement of fan power at the end of 2.3.2).

2.9 Performance evaluation and calibration

2.9.1 Initial performance check

After completion of the construction, an initial check of performance shall be made, to ensure that design requirements are fulfilled. This is done on known

homogeneous specimens covering the anticipated range of thermal resistance.

This initial check should cover the temperature uniformity and stability, air velocity and surface coefficients for both hot and cold side, the effect on accuracy of imbalance and, where appropriate, edge environment.

2.9.2 Complementary measurements

A local heat flow through part of the specimen or equipment can be determined by measurement with a heat flowmeter. The thermal conductivity of materials being part of the equipment can be measured by guarded hot plate or similar methods.

Infrared scanning systems can be used to locate thermal bridges and air leakages as well as to find suitable locations for surface temperature measuring points. After construction of the air circulation system, a velocity scan across the air curtain (the air-flow boundary layer) should be performed to verify that a uniform air curtain is formed.

2.9.3 Calibration

2.9.3.1 Verification specimen

The performance of the equipment shall be verified using homogeneous specimens of known thermal resistance covering the intended thermal resistance range of use. Such specimens can be made from panels of high-density mineral fibre or aged cellular plastics, which have been measured in the guarded hot plate apparatus. The joints between the panels shall not form thermal bridges. The specimen shall be faced on both sides with a facing impervious to air and moisture transfer.

2.9.3.2 Metering box wall calibration

The metering box walls shall be calibrated. This applies to both the guarded and calibrated hot box. The purpose of this calibration is to correct the input to the metering box, Φ_p, for the metering box wall heat flow, Φ_3. For the guarded hot box, this calibration will be influenced by Φ_2, and for the calibrated hot box by Φ_4.

By making steady-state tests on a known homogeneous specimen, with different temperature differences over the metering box walls, a graph or an equation can be prepared for Φ_3 as a function of metering box wall thermopile output. For temperature differences of a few degrees, which should be the extremes of normal testing, this relationship can be assumed to be linear. For a detailed procedure, see references [12] and [13].

2.9.3.3 Flanking loss calibration

The flanking loss, Φ_4, is, for a given piece of equipment, mainly a function of specimen thickness, specimen thermal resistance and construction of the frame. To obtain the flanking loss calibration coefficient, tests are run at steady state on known homogeneous specimens. As the flanking loss/specimen thickness relationship is nonlinear, the thickness range of calibration specimens shall cover the intended range of thickness in testing. If the specimen resistance per unit thickness varies greatly, the calibration procedure shall be repeated to cover the range of R/d of intended use.

Alternatively, suitable calculation procedures, e.g. finite elements or finite differences may be used to estimate the flanking losses; however, this procedure shall be verified by way of a few calibration experiments.

As the flanking loss also depends upon the temperature difference between hot and cold side and between equipment and the room in which the equipment is placed, calibration tests should be carried out covering the range of temperature conditions in which the apparatus will be used.

Section 3: Test procedure

3.1 Introduction

It is necessary that the operator be familiar with the preceding two sections. Since the purpose of the test can vary widely, the procedure is intentionally broad.

For a particular specimen, it should be decided whether the method is applicable or whether other methods are more relevant, e.g. guarded hot plate heat flow meter, or calculations. From the inspection and analysis of the specimen, a range for possible values of its thermal properties should be tentatively estimated. The obtainable accuracy should also be evaluated and should be related to the purpose of the test.

3.2 Conditioning of specimen

In the case of specimens in which heat flow is affected by the presence of moisture, conditioning shall be reported. When meaningful, the mass of the specimen before and after the test shall be reported, or core samples shall be taken before and after the test.

3.3 Specimen selection and mounting

The test specimen shall be selected or constructed in such a way that it is representative. In the case of inhomogeneous specimens, the following shall be considered. For the guarded hot box, a decision shall be taken on the most accurate way of detecting imbalance (air-to-air or air-to-surface). When surface temperatures are very uniform close to the periphery of the metering area, the specimen surface imbalance detection and the evaluation of heat flow through the box, Φ_3, can be the most accurate solution. However, when nonhomogeneities are present close to the periphery of the metering area, air-to-air balance solution can be the only possible solution and imbalance heat flow, Φ_2, is then an unknown source of error. In the guarded hot box, when possible, thermal bridges should be placed symmetrically over the borderline between metering and guard area, so that half of the area of the thermal bridge is in the metering box and the other half is in the guard box.

If the specimen is modular, the metering box dimensions should be a suitable multiple of the module. The perimeter of the metering box should either coincide with the module lines or fall in the middle between the module lines.

If it is impossible to fulfil these requirements, several tests may have to be made with different positions of the metering area: the results shall be considered very carefully, and, if applicable, supplemented with temperature and heat flow measurements and computations.

In the calibrated hot box, the effect of thermal bridges at the specimen edges upon the flanking transmission should be considered. It may be necessary, as mentioned above, to make supplementary tests with different positions of the metering box, which in the case of the calibrated hot box means different specimens representing different sections of the constructions.

The specimen shall be mounted or sealed in such a way that neither air nor moisture will gain ingress into the specimen from the edges or pass from the hot side to the cold side or vice versa.

The edges of the specimen shall be insulated, so that Φ_5 is reduced to a level where the accuracy requirements are met.

It shall be considered whether it is necessary to seal either face of the specimen to avoid air infiltration into the specimen and whether it is necessary to control the dew point of the air on the hot side.

For guarded hot box tests, it should be considered whether continuous cavities in the specimen require barriers, and whether high conductivity facings should be cut at the perimeter of the metering box.

If the specimen surface is uneven, it may be necessary to smooth with plaster, caulking or other suitable material, at the area of contact with the perimeter seal of the metering box, to ensure an airtight seal between metering and guard box.

If the test specimen is smaller than the size provided for the specimen by the metering box, the specimen is mounted in a mast, e.g. a wall in which the specimen is fitted.

The heat flow in the border region between mask and specimen will not be unidirectional; this problem can be minimized by choosing mask and specimen of the same thermal resistance and thickness. In some instances this is not possible, for example in window testing. In this case, when the resistance of the mask is different from that of the wall where the window will be mounted, and the flow lines in the frame of the

window are different from those in end use, the accuracy will be hard to predict. These problems call for test conventions for the specimen mounting to allow comparison and interpretation of results. These are outside of the scope of this International Standard.

3.4 Test conditions

Test conditions shall be chosen considering end-use application, taking into account the effect of testing conditions on accuracy. Both mean test temperature and temperature differences affect test results. Mean temperatures of 10 °C to 20 °C and a difference of at least 20 °C are common in building applications. Air velocity on the hot and cold sides shall be adjusted according to the purpose of the test. Temperature controllers shall be adjusted in such a manner that either Φ_2 or Φ_3, or both, are small or zero. See text on imbalance in ISO 8302.

3.5 Measurement periods

The required time to reach stability for steady-state tests depends upon such factors as thermal resistance and thermal capacity of the specimen, surface coefficients, presence of mass transfer and/or moisture redistribution within the specimen, type and performance of automatic controllers of the apparatus. Due to variation of these factors, it is impossible to give a single criterion for steady state.

An example of a requirement for steady state is the following: The measurements of R and U, Φ_p and T from two successive measuring periods of at least 3 h after near-stability has been reached shall agree within 1 % and results shall not change unidirectionally. For specimens with a high thermal resistance or high mass or both this minimum requirement can be insufficient, and the test period shall be extended.

3.6 Calculations

For steady state, the mean thermal transmission properties defined in 1.4 are calculated in accordance with 2.7 and 2.8.

3.6.1 Homogeneous specimens

In the case of specimens which are homogeneous or less than 20 % inhomogeneous as described in 2.7.1, it is possible to calculate the thermal resistance, R, based upon surface temperatures, the thermal transmittance, U, and the surface coefficient of heat transfer, h, based upon environmental temperatures. Normally, the conventional values from the building codes are used to obtain the conventional total area thermal resistance from measured R.

3.6.2 Inhomogeneous specimens

When testing specimens outside the above-mentioned limit for homogeneity or specimens with a special geometry, only the thermal transmittance, U, is calculated. Environmental temperatures t_{ni} and t_{ne} shall be used.

3.6.3 Evaluation of results

Test results shall be compared with the tentative estimate stated in 3.1. In the case of significant divergences, the specimen shall be carefully inspected to locate any discrepancy from its specifications, and then the tentative estimate shall be repeated with the findings of the inspection. If inexplicable differences still exist between tentative estimates and measured data, the alternative possibilities of oversimplified computation procedures and of test errors shall be investigated.

3.7 Test report

The test report shall include the following information:

a) reference to this International Standard and a statement of compliance which lists any deviations from this International Standard;

b) identification of the test laboratory with address, the date of test, and the sponsor of the test, if appropriate;

c) information on the test equipment, dimensions and emittance of interior surfaces;

d) identification and description of the test specimen with location of sensors;

e) conditioning procedure for specimen, mass before and after test, moisture content and procedure to determine it;

f) specimen orientation and direction of heat transfer;

g) mean air velocity and direction on hot and cold side;

h) total power input and net heat transfer through specimen.

The test report for the determination of thermal resistance, R, in accordance with 3.6.1 shall further include the information in items i) to p).

NOTE 2 The values to be reported under items i) to m) are the mean values of all readings or measurement periods after the initial transient periods.

i) air temperatures on the hot and cold side;

j) surface temperatures on the hot and cold side;

k) weighted surface temperatures for the hot and cold side;

l) the calculated thermal resistance and the conventional surface coefficients of heat transfer as derived from building codes to calculate the thermal transmittance;

m) the estimated accuracy;

n) test duration;

o) complementary measurements, e.g. the moisture content of materials being part of the specimen;

p) other information relevant to the test, e.g. any significant or unexplained divergence between test results and tentative estimates in accordance with 3.1, results of the consequent inspection of the specimen and possible interpretation of divergences.

The test report for the determination of thermal transmittance, U, in accordance with 3.6.2 shall in addition to items a) to h) include the information in items q) to w).

NOTE 3 The values to be reported under items q) to t) are the mean values of all readings or measurement periods after the initial transient periods.

q) the air temperatures on the hot and the cold side;

r) the calculated environmental temperature for the hot and cold side;

s) the calculated thermal transmittance and the surface coefficients of heat transfer from a homogeneous specimen;

t) the estimated accuracy;

u) test duration;

v) complementary measurements, e.g. the thermal conductivity and the moisture content of the materials that are part of the specimen;

w) other information relevant to the test, e.g. any significant or unexplained divergence between test results and tentative estimates in accordance with 3.1, results of the consequent inspection of the specimen and possible interpretation of divergences.

Annex A
(normative)

Heat transfer at surfaces and environmental temperatures

Heat is transferred to and from the specimen both by radiation interchange with other surfaces in the box and by convective heat transfer at the specimen surface. The rate of heat transfer is dependent, for the first mechanism, on the mean radiant temperature seen by the test panel, and for the second mechanism on the adjacent air temperature. The heat flow through the specimen is thus influenced by both the radiant and the air temperatures on either side of it.

A.1 Environmental temperature

The heat balance equation at either surface of the specimen may be written

$$\frac{\Phi}{A} = Eh_r(T'_r - T_s) + h_c(T_a - T_s) \qquad \ldots (A.1)$$

where

Φ/A is the heat flow per unit area into the surface, in watts per square metre;

T'_r is the mean radiant temperature seen by the specimen, in kelvins or degrees Celsius;

T_a is the temperature adjacent to specimen, in kelvins or degrees Celsius;

T_s is the surface temperature of specimen, in kelvins or degrees Celsius;

E is the emissivity factor;

h_r is the radiation coefficient, in watts per square metre kelvin;

h_c is the convection coefficient, in watts per square metre kelvin.

It is convenient to combine radiant and air temperatures into a single index, the environmental temperature T_n, which represents the proper weighting of air and radiant temperatures for the purpose of determining the heat flow to the surface.

Writing

$$\frac{\Phi}{A} = \frac{1}{R_s}(T_n - T_s) \qquad \ldots (A.2)$$

where R_s is the surface thermal resistance, this is equivalent to equation (A.1) with

$$T_n = \frac{Eh_r}{Eh_r + h_c} T'_r + \frac{h_c}{Eh_r + h_c} T_a \qquad \ldots (A.3)$$

and

$$R_s = \frac{1}{Eh_r + h_c} \qquad \ldots (A.4)$$

In general, the difference between environmental temperature in the two boxes should be used for the determination of thermal transmittance, and equation (A.2) used to determine the surface thermal resistances.

In practice, however, it will often be found that T'_r and T_a are very similar to each other in both hot and cold boxes, particularly when the specimen has high resistance, much larger than the surface resistances, or when forced

convection is used such that h_c is much greater than Eh_r. In these cirumstances, it will be sufficient to determine the thermal transmittance from the air temperatures on either side of the specimen where, for the apparatus in question and for the test conditions to be employed, it has been established that negligible errors will result.

For the determination of the thermal resistance of the specimen, only the mean surface temperatures are required.

A.2 Calculation of environmental temperatures

Environmental temperature can be calculated from equation (A.3) if the coefficients Eh_r and h_c are known, and the temperature T'_r and T_a are measured.

If there is a baffle close to and parallel to the specimen surface, its mean temperature may be taken as T'_r and

$$\frac{1}{E} = \frac{1}{\varepsilon_1} + \frac{1}{\varepsilon_2} - 1$$

where ε_1 and ε_2 are the emissivities of the baffle and specimen surfaces respectively.

With the baffle painted matt black ($\varepsilon_1 = 0{,}97$), most building materials will give $E = 0{,}9$, but the value should be considered for each specimen. The radiation coefficient $h_r = 4\sigma T_m^3$, where σ is Stefan's constant [$5{,}67 \times 10^{-8}$ W/(m²·K⁴)], and T_m is the appropriate mean radiant absolute temperature, given by

$$T_m^3 = \frac{\left(T'^2_r + T_s^2\right)(T'_r + T_s)}{4}$$

or

$$T_m \simeq \frac{T'_r + T_s}{2}$$

If surfaces other than the baffle radiate directly to the specimen, it is necessary to measure the temperatures of all such surfaces and combine them using appropriate view factors to obtain T'_r.

The convection coefficient h_c depends on various factors such as air-surface temperature difference, surface roughness, air velocity, direction of heat flow and is less easily predicted.

Typically h_c = 3,0 W/(m²·K) for natural convection at a vertical surface but it can be much higher if there is forced convection.

Where the value of h_c is uncertain, it may be eliminated from (A.1) and (A.2), leading to

$$T_n = \frac{T_a \dfrac{\Phi}{A} + Eh_r(T_a - T'_r)T_s}{\dfrac{\Phi}{A} + Eh_r(T_a - T'_r)} \qquad \text{. . . (A.5)}$$

This expression is valid for heat flow into or out of a surface provided that the sign of Φ is taken as positive if the heat flow is into the surface (that is, positive on the hot side, negative on the cold side).

The use of expression (A.4) requires a knowledge of the specimen mean surface temperature T_s. For nonuniform specimens this may not be available, in which case equation (A.3) can be used with h_c estimated from data obtained during tests on another uniform specimen.

EXAMPLE

In a thermal transmittance test, the following readings were obtained:

Power supplied to metering box: Φ = 31,8 W

Metering area: A = 1,5 m²

Thus the heat flux per unit area through the specimen is

$$\Phi/A = 21{,}2\ \mathrm{W/m^2}$$

Temperatures on hot side:

Mean air temperature: T_{a1} = 30,98 °C

Mean baffle temperature: T'_{r1} = 29,78 °C

Mean surface temperature: T_{s1} = 27,60 °C

Thus

$$T_m = \frac{1}{2}(T'_{r1} + T_{s1}) = 28{,}69\ °\mathrm{C} = 301{,}7\ \mathrm{K}$$

and $h_r = 4 \times 5{,}67 \times 10^{-8} \times 301{,}7^3 = 6{,}23\ \mathrm{W/(m^2 \cdot K)}$

Taking $E = 0{,}9$ then $Eh_r = 5{,}61\ \mathrm{W/(m^2 \cdot K)}$

The value of h_c is not known, use equation (A.5):

$$T_{n1} = \frac{30{,}98 \times 21{,}20 + 5{,}61 \times (30{,}98 - 29{,}78) \times 27{,}60}{21{,}20 + 5{,}61 \times (30{,}98 - 29{,}78)}$$

$$= 30{,}17\ °\mathrm{C}$$

Temperatures on cold side:

Mean air temperature: T_{a2} = 7,39 °C

Mean baffle temperature: T'_{r2} = 7,69 °C

Mean surface temperature: T_{s2} = 8,75 °C

Thus

T_m = 281,3 K, so that with E = 0,9 then Eh_r = 4,54

From equation (A.5)

$$T_{n2} = \frac{7{,}39 \times (-21{,}20) + 4{,}54 \times (7{,}39 - 7{,}69) \times 8{,}75}{(-21{,}20) + 4{,}54 \times (7{,}39 - 7{,}69)}$$

$$= 7{,}47\ °\mathrm{C}$$

Therefore

$$U = \frac{\Phi}{A(T_{n1} - T_{n2})} = 0{,}93\ \mathrm{W/(m^2 \cdot K)}$$

and the surface thermal resistances are, for the hot side

$$R_{s1} = \frac{A(T_{n1} - T_{s2})}{\Phi} = 1{,}01\ \mathrm{(m^2 \cdot K)/W}$$

and for the cold side

$$R_{s2} = \frac{A(T_{n2} - T_{s2})}{\Phi} = 0{,}06\ \mathrm{(m^2 \cdot K)/W}$$

Annex B
(informative)

Bibliography

[1] ISO 8301:1991, *Thermal insulation — Determination of steady-state thermal resistance and related properties — Heat flow meter apparatus.*

[2] ISO 8302:1991, *Thermal insulation — Determination of steady-state thermal resistance and related properties — Guarded hot plate apparatus.*

[3] ISO 9251:1987, *Thermal insulation — Heat transfer conditions and properties of materials — Vocabulary.*

[4] ISO 9288:1989, *Thermal insulation — Heat transfer by radiation — Physical quantities and definitions.*

[5] ASTM C 236, *Test method for steady-state thermal performance of building assemblies by means of a guarded hot box.*

[6] ASTM C 976, *Test method for thermal performance of building assemblies by means of a calibrated hot box.*

[7] BS 874:1973, *Methods for determining thermal insulating properties with definitions of thermal insulating terms.*

[8] Nordtest NT Building 119, *Determination of thermal resistance by means of a hot box.*

[9] ASTM STP 544, MUMAW, J.R. *Calibrated hot box: an effective means for measuring thermal conductance in large wall sections.*

[10] ASTM STP 789, ORLAND, R.D., HOWANSKI, J.W., DERDERIAN, G.D. and SHU, L.S. *Development of a testing procedure for a guarded hot box facility.*

[11] ASTM STP 789, GOSS, W.P. and OLPAK, Ahmet *Design and calibration of a rotatable thermal test facility.*

[12] ASTM STP 789, LAVINE, A.G., RUCKER, J.L. and WILKES, K.E. *Flanking loss calibration for a calibrated hot box.*

[13] GUY and NIXON, *A detailed verification procedure for a guarded hot box.*

[14] ONEGA, R.J. and BURNS, P.J. *Thermal flanking loss.*

ICS 27.220.00

Descriptors: thermal insulation, thermal insulating materials, tests, determination, thermal conductivity, thermal resistance, test equipment.

Price based on 19 pages

INTERNATIONAL STANDARD

ISO 5077

Second edition
2007-02-15

Textiles — Determination of dimensional change in washing and drying

Textiles — Détermination des variations dimensionnelles au lavage et au séchage domestiques

Reference number
ISO 5077:2007(E)

© ISO 2007

PDF disclaimer

This PDF file may contain embedded typefaces. In accordance with Adobe's licensing policy, this file may be printed or viewed but shall not be edited unless the typefaces which are embedded are licensed to and installed on the computer performing the editing. In downloading this file, parties accept therein the responsibility of not infringing Adobe's licensing policy. The ISO Central Secretariat accepts no liability in this area.

Adobe is a trademark of Adobe Systems Incorporated.

Details of the software products used to create this PDF file can be found in the General Info relative to the file; the PDF-creation parameters were optimized for printing. Every care has been taken to ensure that the file is suitable for use by ISO member bodies. In the unlikely event that a problem relating to it is found, please inform the Central Secretariat at the address given below.

© ISO 2007

All rights reserved. Unless otherwise specified, no part of this publication may be reproduced or utilized in any form or by any means, electronic or mechanical, including photocopying and microfilm, without permission in writing from either ISO at the address below or ISO's member body in the country of the requester.

ISO copyright office
Case postale 56 • CH-1211 Geneva 20
Tel. + 41 22 749 01 11
Fax + 41 22 749 09 47
E-mail copyright@iso.org
Web www.iso.org

Published in Switzerland

Foreword

ISO (the International Organization for Standardization) is a worldwide federation of national standards bodies (ISO member bodies). The work of preparing International Standards is normally carried out through ISO technical committees. Each member body interested in a subject for which a technical committee has been established has the right to be represented on that committee. International organizations, governmental and non-governmental, in liaison with ISO, also take part in the work. ISO collaborates closely with the International Electrotechnical Commission (IEC) on all matters of electrotechnical standardization.

International Standards are drafted in accordance with the rules given in the ISO/IEC Directives, Part 2.

The main task of technical committees is to prepare International Standards. Draft International Standards adopted by the technical committees are circulated to the member bodies for voting. Publication as an International Standard requires approval by at least 75 % of the member bodies casting a vote.

Attention is drawn to the possibility that some of the elements of this document may be the subject of patent rights. ISO shall not be held responsible for identifying any or all such patent rights.

ISO 5077 was prepared by Technical Committee ISO/TC 38, *Textiles*, Subcommittee SC 2, *Cleansing, finishing and water resistance tests*.

This second edition cancels and replaces the first edition (ISO 5077:1984), which has been technically revised.

© ISO 2007 – All rights reserved

Textiles — Determination of dimensional change in washing and drying

1 Scope

This International Standard specifies a method for the determination of the dimensional change of fabrics, garments or other textile articles when subjected to an appropriate combination of specified washing and drying procedures.

In the case of textile articles or deformable materials, it is necessary to exercise all possible caution in the interpretation of the results.

2 Normative references

The following referenced documents are indispensable for the application of this document. For dated references, only the edition cited applies. For undated references, the latest edition of the referenced document (including any amendments) applies.

ISO 139, *Textiles — Standard atmospheres for conditioning and testing*

ISO 3759, *Textiles — Preparation, marking and measuring of fabric specimens and garments in tests for determination of dimensional change*

ISO 6330, *Textiles — Domestic washing and drying procedures for textile testing*

3 Principle

The specimen is conditioned in the specified standard atmosphere and measured before subjection to the appropriate washing and drying procedures. After drying, conditioning and remeasuring of the specimen, the changes in dimensions are calculated.

4 Apparatus and reagents

Use apparatus and reagents as specified in ISO 3759 and ISO 6330.

5 Atmospheric conditions

The atmospheric conditions required for conditioning and testing are specified in ISO 139.

6 Test specimens

6.1 The selection, dimensions, marking and measuring of test specimens are specified in ISO 3759.

6.2 When possible, three specimens from each sample should be used. One or two specimens may be used when insufficient sample is available.

© ISO 2007 – All rights reserved

7 Procedure

7.1 Determine the original length and width dimensions, as appropriate, after the specimens have been conditioned and measured according to the procedure specified in ISO 139 and ISO 3759.

7.2 Wash and dry the specimens according to one of the procedures specified in ISO 6330, as agreed between the interested parties.

7.3 After washing and drying, condition and measure the specimens and calculate the dimensional change of the specimens according to the procedure specified in ISO 3759.

8 Expression of results

8.1 Calculate the mean changes in dimensions in both the length and width directions in accordance with the arrangement in ISO 3759 as follows:

$$\frac{x_t - x_o}{x_o} \times 100$$

where

x_o is the original dimension;

x_t is the dimension measured after treatment.

Record the changes in measurement separately as a percentage of the corresponding original value.

8.2 Express the average dimensional changes to the nearest 0,5 %.

8.3 State whether the dimension has decreased (shrinkage) by means of a minus sign (−) or increased (extension) by means of a plus sign (+).

9 Test report

The test report shall specify the following:

a) the number and year of this International Standard;

b) the number of specimens washed and dried;

c) the procedure used for washing and drying from ISO 6330;

d) for fabric specimens, the average dimensional change in the length (warp or wale) and the average dimensional change in the width (weft or course) to the nearest 0,5 %;

e) for garments, the description, make and size of the garment tested;

f) for garments, an adequate description of each measuring position and the average dimensional change to the nearest 0,5 % at each position for each garment tested.

© ISO 2007 – All rights reserved