INTERNATIONAL STANDARD

ISO 8178-9

Second edition
2012-08-15

Reciprocating internal combustion engines — Exhaust emission measurement —

Part 9: Test cycles and test procedures for test bed measurement of exhaust gas smoke emissions from compression ignition engines operating under transient conditions

Moteurs alternatifs à combustion interne — Mesurage des émissions de gaz d'échappement —

Partie 9: Cycles et procédures d'essai pour le mesurage au banc d'essai des émissions de fumées de gaz d'échappement des moteurs alternatifs à combustion interne à allumage par compression fonctionnant en régime transitoire

Reference number
ISO 8178-9:2012(E)

© ISO 2012

Copyright International Organization for Standardization
Provided by IHS under license with ISO
No reproduction or networking permitted without license from IHS

Not for Resale

COPYRIGHT PROTECTED DOCUMENT

© ISO 2012

All rights reserved. Unless otherwise specified, no part of this publication may be reproduced or utilized in any form or by any means, electronic or mechanical, including photocopying and microfilm, without permission in writing from either ISO at the address below or ISO's member body in the country of the requester.

ISO copyright office
Case postale 56 • CH-1211 Geneva 20
Tel. + 41 22 749 01 11
Fax + 41 22 749 09 47
E-mail copyright@iso.org
Web www.iso.org

Published in Switzerland

© ISO 2012 – All rights reserved

Copyright International Organization for Standardization
Provided by IHS under license with ISO
No reproduction or networking permitted without license from IHS

Not for Resale

Contents

Page

Foreword ... iv
Introduction ... v
1 Scope ... 1
2 Normative references ... 1
3 Terms and definitions ... 2
4 Symbols and units ... 4
5 Test conditions ... 5
5.1 Ambient test conditions ... 5
5.2 Power ... 5
5.3 Engine air inlet system ... 6
5.4 Engine exhaust system ... 6
5.5 Cooling system ... 6
5.6 Lubricating oil ... 6
5.7 Engines with charge air cooling ... 6
5.8 Test fuel temperature ... 6
6 Test fuels ... 6
7 Measurement equipment and accuracy ... 7
7.1 General ... 7
7.2 Dynamometer specification ... 7
7.3 Determination of smoke ... 7
7.4 Accuracy ... 9
8 Calibration of the opacimeter ... 9
8.1 General ... 9
8.2 Calibration procedure ... 9
9 Test run ... 9
9.1 Installation of the measuring equipment ... 9
9.2 Checking of the opacimeter ... 10
9.3 Test cycle ... 10
9.4 Determination of effective optical path length (L_A) ... 10
10 Data evaluation and calculation ... 10
10.1 Data evaluation ... 10
10.2 Bessel algorithm ... 12
10.3 Ambient correction ... 13
10.4 Test report ... 14
11 Determination of smoke ... 14
11.1 General ... 14
11.2 Full-flow opacimeter ... 15
11.3 Partial-flow-opacimeter ... 16
Annex A (normative) **Test cycle for variable-speed off-road engines** ... 19
Annex B (normative) **Test cycle for constant-speed off-road engines** ... 26
Annex C (informative) **Remarks on test cycles** ... 30
Annex D (informative) **Example of calculation procedure** ... 31
Annex E (normative) **Test cycle for marine propulsion engines** ... 42
Annex F (normative) **Test cycle for variable speed engines type F (rail traction)** ... 48
Bibliography ... 52

© ISO 2012 – All rights reserved

Copyright International Organization for Standardization
Provided by IHS under license with ISO
No reproduction or networking permitted without license from IHS
Not for Resale

Foreword

ISO (the International Organization for Standardization) is a worldwide federation of national standards bodies (ISO member bodies). The work of preparing International Standards is normally carried out through ISO technical committees. Each member body interested in a subject for which a technical committee has been established has the right to be represented on that committee. International organizations, governmental and non-governmental, in liaison with ISO, also take part in the work. ISO collaborates closely with the International Electrotechnical Commission (IEC) on all matters of electrotechnical standardization.

International Standards are drafted in accordance with the rules given in the ISO/IEC Directives, Part 2.

The main task of technical committees is to prepare International Standards. Draft International Standards adopted by the technical committees are circulated to the member bodies for voting. Publication as an International Standard requires approval by at least 75 % of the member bodies casting a vote.

Attention is drawn to the possibility that some of the elements of this document may be the subject of patent rights. ISO shall not be held responsible for identifying any or all such patent rights.

ISO 8178-9 was prepared by Technical Committee ISO/TC 70, *Internal combustion engines*, Subcommittee SC 8, *Exhaust gas emission measurement*.

This second edition cancels and replaces the first edition (ISO 8178-9:2000, ISO 8178-9:2000/AMD 1:2004), which has been technically revised.

ISO 8178 consists of the following parts, under the general title *Reciprocating internal combustion engines — Exhaust emission measurement*:

— *Part 1: Test-bed measurement of gaseous and particulate exhaust emissions*

— *Part 2: Measurement of gaseous and particulate exhaust emissions under field conditions*

— *Part 3: Definitions and methods of measurement of exhaust gas smoke under steady-state conditions*

— *Part 4: Steady-state test cycles for different engine applications*

— *Part 5: Test fuels*

— *Part 6: Report of measuring results and test*

— *Part 7: Engine family determination*

— *Part 8: Engine group determination*

— *Part 9: Test cycles and test procedures for test bed measurement of exhaust gas smoke emissions from compression ignition engines operating under transient conditions*

— *Part 10: Test cycles and test procedures for field measurement of exhaust gas smoke emissions from compression ignition engines operating under transient conditions*

— *Part 11: Test-bed measurement of gaseous and particulate exhaust emissions from engines used in nonroad mobile machinery under transient test conditions*

© ISO 2012 – All rights reserved
Copyright International Organization for Standardization
Provided by IHS under license with ISO
No reproduction or networking permitted without license from IHS
Not for Resale

Introduction

On a global scale, there are currently many smoke measurement procedures in various forms. Some of these smoke measurement procedures are designed for test-bed testing and intended to be used for certification or type-approval purposes. Others are designed for field-testing and can be used in inspection and maintenance programmes. Different smoke measurement procedures exist to meet the needs of various regulatory agencies and industries. The two methods typically used are the filter smokemeter method and the opacimeter.

The purpose of ISO 8178 is to combine the key features of several existing smoke measurement procedures as much as technically possible. ISO 8178-4 specifies a number of different test cycles to be used to characterize gaseous and particulate emissions from nonroad engines. The test cycles in ISO 8178-4 were developed in recognition of the differing operating characteristics of various categories of nonroad machines. Likewise, different smoke test cycles can be appropriate for different categories of nonroad engines and machines. Within ISO 8178-4 it was possible to characterize and control gaseous and particulate emissions from nonroad engines using a variety of steady-state operating points. To properly characterize and control smoke emissions from many engine applications a transient smoke test cycle is needed.

This part of ISO 8178 is intended for the measurement of the emissions of smoke from compression ignition internal combustion engines. It applies to engines operating under transient conditions, where the engine speed or load, or both, changes with time; note that the smoke emissions from typical well-maintained naturally-aspirated engines under transient conditions will generally be the same as the smoke emissions under steady-state conditions.

Only opacimeter-type smokemeters are intended to be used for making the smoke measurements described in this part of ISO 8178, which allows the use of either full-flow or partial-flow opacimeters and corrects accounts for differences in response time between the two types of opacimeters, but does not account for any differences due to differences in temperatures at the sampling zone.

The test cycle described in Annex E is representative for those engines that are used in applications as described in the E1, E2, E3 and E5 cycles of ISO 8178-4:2007.

The test cycle described in Annex F is representative for those engines that are used in applications as described in the F cycle of ISO 8178-4:2007.

© ISO 2012 – All rights reserved

Copyright International Organization for Standardization
Provided by IHS under license with ISO
No reproduction or networking permitted without license from IHS
Not for Resale

Copyright International Organization for Standardization
Provided by IHS under license with ISO
No reproduction or networking permitted without license from IHS
Not for Resale

Reciprocating internal combustion engines — Exhaust emission measurement —

Part 9:
Test cycles and test procedures for test bed measurement of exhaust gas smoke emissions from compression ignition engines operating under transient conditions

1 Scope

This part of ISO 8178 specifies the measurement procedures and test cycles for the evaluation of smoke emissions from compression ignition engines on the test bed.

For transient smoke test cycles, smoke testing is conducted using smokemeters which operate on the light extinction principle. The purpose of this part of ISO 8178 is to define the smoke test cycles and the methods used to measure and analyse smoke. Specifications for measurement of smoke using the light extinction principle can be found in ISO 11614. The test procedures and measurement techniques described in Clauses 1 to 11 of this part of ISO 8178 are applicable to reciprocating internal combustion (RIC) engines in general. However, an engine application can only be evaluated using this part of ISO 8178 once the appropriate test cycle has been developed. Annexes A, B, E and F to this part of ISO 8178 each contain a test cycle that is relevant only for those specific applications listed in the Scope of that annex. Where possible, the smoke test cycle described in the annex utilizes the engine and machine categories developed in ISO 8178-4.

For certain categories of non-road engines “at site” rather than “test bed” smoke test procedures can prove to be necessary. For engines used in machinery covered by additional requirements (e.g. occupational health and safety regulations), additional test conditions and special evaluation methods can apply.

2 Normative references

The following documents, in whole or in part, are normatively referenced in this document and are indispensable for its application. For dated references, only the edition cited applies. For undated references, the latest edition of the referenced document (including any amendments) applies.

ISO 8178-4:2007, *Reciprocating internal combustion engines — Exhaust emission measurement — Part 4: Steady-state test cycles for different engine applications*

ISO 8178-5, *Reciprocating internal combustion engines — Exhaust emission measurement — Part 5: Test fuels*

ISO 8178-6, *Reciprocating internal combustion engines — Exhaust emission measurement — Part 6: Report of measuring results and test*

ISO 8178-7, *Reciprocating internal combustion engines — Exhaust emission measurement — Part 7: Engine family determination*

ISO 8178-8, *Reciprocating internal combustion engines — Exhaust emission measurement — Part 8: Engine group determination*

ISO 8528-1, *Reciprocating internal combustion engine driven alternating current generating sets — Part 1: Application, ratings and performance*

ISO 11614:1999, *Reciprocating internal combustion compression-ignition engines — Apparatus for measurement of the opacity and for determination of the light absorption coefficient of exhaust gas*

© ISO 2012 – All rights reserved

Copyright International Organization for Standardization
Provided by IHS under license with ISO
No reproduction or networking permitted without license from IHS
Not for Resale

3 Terms and definitions

For the purposes of this document the following terms and definitions apply.

3.1
exhaust gas smoke
visible suspension of solid and/or liquid particles in gases resulting from combustion or pyrolysis

NOTE Black smoke (soot) is mainly comprised of carbon particles; blue smoke is usually due to droplets resulting from the incomplete combustion of fuel or lubricating oil; white smoke is usually due to condensed water and/or liquid fuel; yellow smoke is caused by NO_2.

3.2
transmittance
τ
fraction of light, expressed as a percentage, transmitted from a source through a smoke-obscured path and which reaches the observer or the instrument receiver

3.3
opacity
N
fraction of light, expressed as a percentage, transmitted from a source through a smoke-obscured path and which is prevented from reaching the observer or the instrument receiver

NOTE $N = 100 - \tau$

3.4
optical path length

3.4.1
effective optical path length
L_A
length of the smoke-obscured optical path between the opacimeter light source and the receiver, expressed in metres and corrected, as necessary, for non-uniformity due to density gradients and fringe effect

NOTE Portions of the total light source to receiver path length which are not smoke obscured do not contribute to the effective optical path length.

3.4.2
standard effective optical path length
L_{AS}
measurement used to ensure meaningful comparisons of quoted opacity values

NOTE L_{AS} values are defined in 10.1.4.

3.5
light absorption coefficient
k
fundamental means of quantifying the ability of a smoke plume or smoke-containing gas sample to obscure light

NOTE By convention, the light absorption coefficient is expressed in reciprocal metres (m^{-1}). The light absorption coefficient is a function of the number of smoke particles per unit gas volume, the size distribution of the smoke particles and the light absorption and scattering properties of the particles. In the absence of blue, white or yellow smoke or ash, the size distribution and the light absorption/scattering properties are similar for all diesel exhaust gas samples and the light absorption coefficient is primarily a function of the smoke particle density.

© ISO 2012 – All rights reserved
Copyright International Organization for Standardization
Provided by IHS under license with ISO
No reproduction or networking permitted without license from IHS
Not for Resale

3.6
Beer-Lambert law
mathematical equation describing the physical relationships between the light absorption coefficient (k), the smoke parameters of transmittance (τ) and effective optical path length (L_A)

NOTE Because the light absorption coefficient (k) cannot be measured directly, the Beer-Lambert law is used to calculate k, when opacity (N) or transmittance (τ), and effective optical path length (L_A) are known:

$$k = \frac{-1}{L_A} \ln\left(\frac{\tau}{100}\right) \tag{1}$$

$$k = \frac{-1}{L_A} \ln\left(1 - \frac{N}{100}\right) \tag{2}$$

3.7
opacimeter
instrument used for the measurement of smoke characteristics using the optical method of transmittance

3.7.1
full-flow opacimeter
instrument in which all flow of exhaust gas passes through the smoke measuring chamber

3.7.1.1
full-flow end-of-line opacimeter
instrument which measures the opacity of the full exhaust plume as it exits the tailpipe

NOTE The light source and receiver for this type of opacimeter are located on opposite sides of the smoke plume and in close proximity to the open end of the tailpipe. When applying this type of opacimeter, the effective optical path length is a function of the tailpipe design.

3.7.1.2
full-flow in-line opacimeter
instrument which measures the opacity of the full exhaust plume within the tailpipe

NOTE The light source and receiver for this type of opacimeter are located on opposite sides of the smoke plume and in close proximity to the outer wall of the tailpipe. With this type of opacimeter the effective optical path length is dependent on the instrument.

3.7.2
partial-flow opacimeter
instrument which samples a representative portion of the total exhaust flow and passes the sample through the measuring chamber

NOTE With this type of opacimeter the effective optical path length is a function of the opacimeter design.

3.7.3
Opacimeter response time

3.7.3.1
opacimeter physical response time
t_p
difference between the times when the raw k-signal reaches 10 % and 90 % of the full deviation when the light absorption coefficient of the gas being measured is changed in less than 0,01 s

NOTE The physical response time of the partial flow opacimeter is defined with the sampling probe and transfer tube. Additional information on the physical response time can be found in 8.2.1 and 11.7.2 of ISO 11614:1999.

© ISO 2012 – All rights reserved

Copyright International Organization for Standardization
Provided by IHS under license with ISO
No reproduction or networking permitted without license from IHS
Not for Resale

3.7.3.2
opacimeter electrical response time
t_e
difference between the times when the instrument recorder output signal or display reaches 10 % and 90 % of full scale when the light source is interrupted or completely extinguished in less than 0,01 s

NOTE Additional information on the electrical response time can be found in 8.2.3 of ISO 11614:1999.

4 Symbols and units

See Table 1.

Table 1 — Symbols and units for terms used in this part of ISO 8178

Symbol	Term	Unit
B	Bessel function constant	1
C	Bessel function constant	1
D	Bessel function constant	1
E	Bessel constant	1
f_a	Atmospheric factor	1
f_c	Bessel filter cut-off frequency	s^{-1}
k	Light absorption coefficient	m^{-1}
k_{corr}	Ambient condition corrected light absorption coefficient	m^{-1}
k_{obs}	Observed light absorption coefficient	m^{-1}
K	Bessel constant	1
K_s	Smoke ambient correction factor	1
L_A	Effective optical path length	m
L_{AS}	Standard effective optical path length	m
N	Opacity	%
N_A	Opacity at effective optical path length	%
N_{AS}	Opacity at standard effective optical path length	%
p_{me}	Brake effective mean pressure	kPa
p_s	Dry atmospheric pressure	kPa
P	Engine power	kW
S_i	Instantaneous smoke value	m^{-1} or %
t_{Aver}	Overall response time	s
t_e	Opacimeter electrical reponse time	s
t_F	Filter response time for Bessel function	s
t_p	Opacimeter physical response time	s
Δt	Time between successive smoke data (= 1/sampling rate)	s
T_a	Engine intake air temperature	K
X	Desired overall response time	s
Y_i	Bessel averaged smoke value	m^{-1} or %
ρ	Dry ambient density	kg/m^3
τ	Smoke transmittance	%
Ω	Bessel constant	1

Copyright International Organization for Standardization
Provided by IHS under license with ISO
No reproduction or networking permitted without license from IHS
Not for Resale
© ISO 2012 – All rights reserved

5 Test conditions

5.1 Ambient test conditions

5.1.1 Test condition parameter

The absolute temperature T_a, of the engine intake air expressed in kelvin, and the dry atmospheric pressure p_s, expressed in kPa, shall be measured, and the atmospheric factor f_a, shall be determined using Formulae (3) to (5).

For naturally aspirated and mechanically supercharged compression-ignition engines and compression-ignition engines with wastegates operating:

$$f_a = \left(\frac{99}{p_s}\right) \times \left(\frac{T_a}{298}\right)^{0,7} \tag{3}$$

This formula also applies if the wastegate is operating only during sections of the test cycle. If the wastegate is not operating during any section of the test cycle, Formula (4) or (5) shall be used depending on the type of charge cooling, if any.

For turbocharged compression-ignition engines without charge air cooling, or with charge air cooling by air/air cooler:

$$f_a = \left(\frac{99}{p_s}\right)^{0,7} \times \left(\frac{T_a}{298}\right)^{1,2} \tag{4}$$

For turbocharged compression-ignition engines with charge air to liquid charge air cooler:

$$f_a = \left(\frac{99}{p_s}\right)^{0,7} \times \left(\frac{T_a}{298}\right)^{0,7} \tag{5}$$

5.1.2 Test validation criteria — test conditions

For a test to be recognized as valid the parameter f_a should be such that:

$$0,93 \leq f_a \leq 1,07 \tag{6}$$

It is recommended that tests be with the parameter f_a between 0,96 and 1,06.

Additional validation criteria are given in 7.3.2.3 and A.3.2.2.

5.2 Power

Those auxiliaries which are necessary only for the operation of the machine and which may be mounted on the engine shall be removed for the test. The following incomplete list is given as an example:

— air compressor for brakes;

— power steering pump;

— air conditioning compressor;

— pumps for hydraulic actuators.

For further details see 3.8 of ISO 8178-1:2006.

© ISO 2012 – All rights reserved

Copyright International Organization for Standardization
Provided by IHS under license with ISO
No reproduction or networking permitted without license from IHS
Not for Resale

5.3 Engine air inlet system

The test engine shall be equipped with an air inlet system presenting an air inlet restriction within ± 10 % of the manufacturer's specified upper limit for a clean air-cleaner. The upper limit shall be at the engine operating condition, as specified by the manufacturer, that results in the maximum air flow for the respective engine application.

5.4 Engine exhaust system

The test engine shall be equipped with an exhaust system presenting an exhaust back pressure within ± 10 % of the manufacturer's specified upper limit. The upper limit shall be at the engine operating condition, as specified by the manufacturer, that results in the maximum declared power for the respective engine application. Tests may be conducted with a muffler, as this will tend to reduced exhaust pulsations which may interfere with measurement of smoke. Further, the use of a muffler should provide better correlation between test-bed smoke measurement and any in-field smoke tests that may occur. The design of the muffler (i.e. volume) should be typical of that used in actual field applications of the engine being tested.

5.5 Cooling system

An engine cooling system with sufficient capacity to maintain the engine at normal operating temperatures prescribed by the manufacturer shall be used.

5.6 Lubricating oil

Specifications of the lubricating oil used for the test shall be recorded and presented with the results of the test.

5.7 Engines with charge air cooling

The temperature of the cooling medium and the temperature of the charge air shall be recorded.

The cooling system shall be set with the engine operating at the speed and load specified by the manufacturer. The charge air temperature and cooler pressure drop shall be set to within ± 4 K and ± 2 kPa respectively of the manufacturer's specification.

5.8 Test fuel temperature

The test fuel temperature shall be in accordance with the manufacturer's recommendations. In the event that the manufacturer does not specify the temperature, it shall be 311 K ± 5 K. Except for cases where "heavy" fuel is used, the temperature specified by the manufacturer shall not be greater than 316 K. The fuel temperature shall be measured at the inlet to the fuel injection pump unless otherwise specified by the manufacturer, and the location of measurement shall be recorded.

6 Test fuels

Fuel characteristics influence the engine smoke emissions. Therefore, the characteristics of the fuel used for the test shall be determined, recorded and presented with the results of the test. Where fuels designated in ISO 8178-5 are used as reference fuels, the reference code and the analysis of the fuel shall be provided. For all other fuels the characteristics to be recorded are those listed in the appropriate universal data sheets in ISO 8178-5.

The selection of the fuel for the test depends on the purpose of the test. Unless otherwise agreed by the parties the fuel shall be selected in accordance with Table 2. When a suitable reference fuel is not available, a fuel with properties very close to the reference fuel may be used. The characteristics of the fuel shall be declared.

© ISO 2012 – All rights reserved
Copyright International Organization for Standardization
Provided by IHS under license with ISO
No reproduction or networking permitted without license from IHS
Not for Resale

Table 2 — Selection of fuel

Test purpose	Interested parties	Fuel selection
Type approval (certification)	Certification body Manufacturer or supplier	Reference fuel, if one is defined Commercial fuel if no reference fuel is defined
Acceptance test	Manufacturer or supplier Customer or inspector	Commercial fuel as specified by the manufacturer [a]
Research/development	One or more of: — manufacturer; — research organization; — fuel and lubricant supplier; etc.	To suit the purpose of the test

[a] Customers and inspectors should note that the emission tests carried out using commercial fuel will not necessarily comply with limits specified when using reference fuels. The fuel used for acceptance tests should be within the range of fuel specifications allowed by the engine manufacturer, as specified in the engine manufacturer's technical literature.

7 Measurement equipment and accuracy

7.1 General

The following equipment shall be used for smoke tests on engines using dynamometers. This part of ISO 8178 does not contain details of pressure and temperature measuring equipment. Instead, only the accuracy requirements of such equipment necessary for conducting a smoke test are given in 7.4.

7.2 Dynamometer specification

An engine dynamometer with adequate characteristics to perform the test cycle as described in Annexes A and B shall be used. Test cycle linearity requirements apply only when tests have been conducted using an electric dynamometer. The instrumentation for torque and speed measurement shall allow the measurement accuracy required for running the test cycle within the limits given in Annexes A and B. Speed and torque shall be sampled at a frequency of at least 1 Hz. The accuracy of the measuring equipment shall be such that the maximum tolerances of the figures given in Table 3 are not exceeded. Engine driven equipment that meets these requirements may be used instead of dynamometers.

7.3 Determination of smoke

7.3.1 General

Transient smoke tests must be conducted using opacimeter-type smokemeters. Three different types of opacimeters are allowed: in-line and end-of-line full-flow opacimeters and the partial-flow opacimeter. Specifications for the three types of opacimeters can be found in Clause 11 of this part of ISO 8178 and in Clauses 6 and 7 of ISO 11614:1999. Temperature correction has not been validated for transient tests, therefore, temperature correction of smoke results has not been included in this part of ISO 8178.

© ISO 2012 – All rights reserved

Copyright International Organization for Standardization
Provided by IHS under license with ISO
No reproduction or networking permitted without license from IHS
Not for Resale

Table 3 — Permissible deviations of instruments for engine-related parameters

Item	Permissible deviation (% based on engine maximum values) in accordance with ISO 3046-3	Calibration intervals months
Engine speed	±2 %	3
Torque	±2 % or ± 5 Nm [a]	3
Power	±3 %	not applicable
[a] Whichever is greater.		

7.3.2 Specifications — opacimeters

7.3.2.1 General

Smoke tests require the use of a smoke measurement and data processing system which includes three functional units. These units may be integrated into a single component or provided as a system of interconnected components. The three functional units are as follows:

— a full-flow or a partial-flow opacimeter meeting the specifications of this subclause. Detailed specifications for opacimeters can be found in Clause 11 and in ISO 11614;

— a data processing unit capable of performing the functions described in 10.2 and 10.3 and in Annex D;

— a printer and/or electronic storage medium to record and output the required smoke values specified in Annexes A and B.

7.3.2.2 Linearity

Linearity is defined as the difference between the value measured by the opacimeter and the reference value of the calibrating device. The linearity shall not exceed ± 2 % opacity.

7.3.2.3 Zero drift

Zero drift during the lesser of a one hour period or the duration of the test shall not exceed ± 0,5 % opacity or 2 % of full scale whichever is smaller.

7.3.2.4 Opacimeter display and range

For display in both opacity and light absorption coefficient the opacimeter shall have a measuring range appropriate for accurately measuring the smoke of the engine being tested. The resolution shall be at least 0,1 % of full scale.

The optical path length selected for the smoke instrument shall be suitable for the smoke levels being measured in order to minimize errors in calibrations, measurements and calculations.

7.3.2.5 Instrument response time

The physical response time of the opacimeter shall not exceed 0,2 s, and the electrical response time of the opacimeter shall not exceed 0,05 s.

7.3.2.6 Sampling requirements for partial-flow opacimeters

The sampling conditions shall conform to the requirements of 11.3.

Copyright International Organization for Standardization
Provided by IHS under license with ISO
No reproduction or networking permitted without license from IHS
Not for Resale

© ISO 2012 – All rights reserved

7.3.2.7 Light source

The light source shall conform to the requirements of 11.2 and 11.3

7.3.2.8 Neutral density filters

Any neutral density filters used for calibrating and checking opacimeters must be known to an accuracy of ± 1 % opacity and the filter's nominal value must be checked for accuracy at least yearly using a reference traceable to a national or International Standard.

Neutral density filters are precision devices and can easily be damaged during use. Handling should be minimized and, when required, should be done with care to avoid scratching or soiling of the filter.

7.4 Accuracy

The calibration of all measuring instruments shall be traceable to International Standards (or national standards if no International Standards exist) and comply with the requirements given in Table 3.

8 Calibration of the opacimeter

8.1 General

The opacimeter shall be calibrated as often as necessary in order to fulfil the accuracy requirements of this part of ISO 8178. The calibration method that shall be used is described in 8.2.

8.2 Calibration procedure

8.2.1 Warming-up time

The opacimeter shall be warmed up and stabilized in accordance with the manufacturer's recommendations. If the opacimeter is equipped with a purge air system to prevent sooting of the instrument optics, this system should also be activated and adjusted in accordance with the manufacturer's recommendations.

8.2.2 Establishment of the linearity response

With the opacimeter in the opacity readout mode, and with no blockage of the opacimeter light beam, the readout shall be adjusted to 0 % ± 0,5 % opacity.

With the opacimeter in the opacity readout mode, and all light prevented from reaching the receiver, the readout shall be adjusted to 100 % ± 0,5 % opacity.

The linearity of the opacimeter, when used in the opacity mode, shall be checked periodically in accordance with the manufacturer's recommendations. A neutral density filter between 30 % and 60 % opacity which meets the requirements of 7.3.2.8 shall be introduced to the opacimeter and the value recorded. The instrument readout must not differ by more than ± 2 % opacity from the nominal value of the neutral density filter. Any nonlinearity exceeding the above value shall be corrected prior to the test.

9 Test run

9.1 Installation of the measuring equipment

The opacimeter and sample probes, if applicable, shall be installed after the muffler or any after-treatment device, if fitted, according to the installation procedures specified by the instrument manufacturer. Additionally, the requirements of Clause 10 of ISO 11614:1999 shall be observed, where appropriate.

© ISO 2012 – All rights reserved

Copyright International Organization for Standardization
Provided by IHS under license with ISO
No reproduction or networking permitted without license from IHS
Not for Resale

9.2 Checking of the opacimeter

Prior to any zero and full-scale checks, the opacimeter shall be warmed up and stabilized in accordance with the instrument manufacturer's recommendations. If the opacimeter is equipped with a purge air system to prevent sooting of the meter optics, this system shall also be activated and adjusted in accordance with the manufacturer's recommendations.

The zero and full-scale checks shall be made in the opacity readout mode, since the opacity scale offers two truly definable calibration points, namely 0 % opacity and 100 % opacity. The light absorption coefficient is then correctly calculated based upon the measured opacity and L_A, as submitted by the opacimeter manufacturer, when the instrument is returned to the k readout mode for testing.

With no blockage of the opacimeter light beam, the readout shall be adjusted to 0 % ± 1 % opacity. With the light being prevented from reaching the receiver, the readout shall be adjusted to 100 % ± 1 % opacity.

9.3 Test cycle

The engine shall be run on the test cycle as described in Annexes A, B, E and F, taking into account the considerations noted in Annex C.

9.4 Determination of effective optical path length (L_A)

Portions of the light source to receiver path length which are not smoke obscured do not contribute to the effective optical path length. If the smokemeter light beam is located sufficiently close to the exhaust outlet (within 0,07 m), the cross section of the smoke plume as it passes by the smokemeter is essentially the same as the tailpipe outlet along the line of orientation of the smokemeter light beam. In general, this distance should be determined by direct measurement of the tailpipe outlet. To achieve corrected smoke results which are accurate within ± 2 % opacity, determination of L_A shall be made within ± 6 %. (The largest error in opacity occurs at an opacity of approximately 60 %, at lower and higher values of opacity, less accurate determination of L_A can be tolerated.) For the smallest standard effective optical path length (0,038 m), ± 6 % equates to an accuracy of 0,002 m.

It is often difficult, particularly in field testing, to gain access to and obtain direct measurements of the tailpipe outlets on many machines. Therefore, the extension of the exhaust stack pipe from three to a maximum of 30 times the stack pipe diameter should be considered if the engine manufacturer does not have any objections. Proper sealing of that joint is necessary to avoid exhaust dilution with air.

For many common tailpipe designs L_A can be determined with sufficient accuracy from external exhaust system dimensions which are more easily measured.

10 Data evaluation and calculation

10.1 Data evaluation

10.1.1 General requirements – opacimeters

The smoke shall be sampled using a minimum frequency of 20 Hz. Smoke values shall be reported in units of either opacity (N) or light absorption coefficient (k). The measured smoke values (transmittance) shall be converted into the respective smoke units and corrected for opacimeter optical path length differences, as necessary (see 10.1.2, 10.1.3 and 10.1.4). Ambient density correction, if necessary, shall be applied to the light absorption coefficient, only (see 10.3). The smoke data shall then be processed by means of the Bessel algorithm, as described in 10.2 and Annex A.

The sample line length shall not affect the smoke trace (see 10.3). However, even though sample line length does not affect the shape of the smoke trace, it may introduce a delay between when the smoke is produced and when it is measured. The analysis of smoke traces shall account for any delay time associated with transport of smoke in the exhaust system.

© ISO 2012 – All rights reserved
Copyright International Organization for Standardization
Provided by IHS under license with ISO
No reproduction or networking permitted without license from IHS
Not for Resale

The smoke values shall then be calculated as described in Annex A.

10.1.2 Beer-Lambert relationships

The Beer-Lambert law defines the relationship between transmittance, light absorption coefficient and effective optical path length as shown in Formula (7).

$$\frac{\tau}{100} = e^{-kL_A} \tag{7}$$

From the definitions of transmittance and opacity, the relationship between these parameters may be defined as shown in Formula (8).

$$N = 100 - \tau \tag{8}$$

From Formulae (7) and (8) the following relationships are derived:

$$N_{AS} = 100 \times \left[1 - \left(1 - \frac{N_A}{100} \right)^{\frac{L_{AS}}{L_A}} \right] \tag{9}$$

$$k = -\frac{1}{L_A} \times \ln\left(1 - \frac{N_A}{100} \right) \tag{10}$$

10.1.3 Data conversion

Conversion from as-measured smoke values to appropriate reporting units is a two-step process. Since the basic measurement unit of all opacimeters is transmittance, the first step in all cases is to convert from transmittance (τ) to opacity at the as-measured effective optical path length (N_A) using Formula (8). For most opacimeters this step is done internally and is invisible to the user.

The second step of the process is to convert from N_A to the desired reporting units as follows:

If the test results are reported in opacity units, Formula (9) must be used to convert from opacity at the as-measured effective optical path length (N_A) to opacity at the standard effective optical path length (N_{AS}).

NOTE In the event that the measured and standard effective optical path lengths are identical, N_{AS} is equal to N_A and this secondary conversion step is not required.

If the test results are reported in units of light absorption coefficient, then Formula (10) shall be applied.

10.1.4 Effective optical path length input values

In order to apply Formula (10), it is necessary to apply the as-measured effective optical path length (L_A). To use Formula (9), values shall be applied both for L_A and for the standard effective optical path length L_{AS}.

For full-flow end-of-line opacimeters, L_A is a function of the engine tailpipe design. For straight tailpipes with a circular cross section, L_A is equal to the tailpipe inner diameter.

For partial-flow (sampling) opacimeters and full-flow in-line opacimeters, L_A is a fixed function of the instrument measurement cell and purge air system design. Specification data supplied by the instrument manufacturer shall be used to determine the appropriate value for L_A when these types of opacimeters are used.

Typically, it is necessary to determine L_A to within 0,002 m in order to achieve corrected smoke results that are accurate to within 2 % opacity.

Smoke opacity readings depend on the effective optical path length of the instrument. Since limit values may be established in units of percent opacity, they must be referred to the standard effective optical path lengths (pipe diameter) at which the limit values apply. For meaningful smoke data comparisons, smoke opacity results

© ISO 2012 – All rights reserved

Copyright International Organization for Standardization
Provided by IHS under license with ISO
No reproduction or networking permitted without license from IHS
Not for Resale

shall be reported at the standard effective optical path lengths (L_{AS}) shown in Table 4. Smoke opacity may be measured at non standard optical path lengths.

For the purposes of Table 4 engine power need not be measured. Engine power is typically available either from a label on the engine, from the owner's manual for the engine or from information used to apply certification or type approval of the engine. In the event that engine power cannot be determined, it is not possible to evaluate the engine's compliance with limit values that are expressed in percent opacity.

Table 4 — Standard effective optical path lengths

Engine power P kW	Standard effective optical path length L_{AS} m
$P < 37$	0,038
$37 \leq P < 75$	0,05
$75 \leq P < 130$	0,075
$130 \leq P < 225$	0,1
$225 \leq P < 450$	0,125
$P \geq 450$	0,15

10.2 Bessel algorithm

10.2.1 General

The Bessel algorithm shall be used to compute the average values from the instantaneous smoke readings. The algorithm can be applied to either values of smoke opacity or light absorption coefficient. However, if the smoke level is less than 40 % opacity, the algorithm may be applied to the opacity signal with negligible error. The algorithm emulates a low pass second order filter, and its use requires iterative calculations to determine the coefficients. These coefficients are a function of the response time of the opacimeter system and the sampling rate. Therefore, the calculations given in 10.2.2 must be repeated whenever the system response time and/or sampling rate changes.

10.2.2 Calculation of filter response time and Bessel constants

The required Bessel filter response time (t_F) is a function of the physical and electrical response times of the opacimeter system, as defined in 3.7.3, and the desired overall response time X and shall be calculated using Formula (11):

$$t_F = \sqrt{X^2 - \left(t_p^2 + t_e^2\right)} \tag{11}$$

where

t_p is the physical response time, in seconds;

t_e is the electrical response time, in seconds.

Formula (11) can be used to adjust differing opacimeters to a common response time provided that both t_p and t_e are $\ll X$ (see 7.3.2.5) and provided that both t_p and t_e are $\ll$ the duration of the transient test.

The calculations for estimating the filter cut-off frequency (f_c) are based on a step input of 0 to 1 in $<$ 0,01 s (see Annex D). The response time is defined as the time between when the Bessel output reaches 10 % (t_{10}) and

© ISO 2012 – All rights reserved
Copyright International Organization for Standardization
Provided by IHS under license with ISO
No reproduction or networking permitted without license from IHS
Not for Resale

when it reaches 90 % (t_{90}) of this step function. This must be obtained by iterating on f_c until $t_{90} - t_{10} \cong t_F$. The first iteration for f_c is calculated using Formula (12).

$$t_c = \frac{\pi}{(10 \times t_F)} \tag{12}$$

The Bessel constants E and K shall be calculated using Formulae (13) and (14).

$$E = \frac{1}{1 + \Omega \times \sqrt{3 \times D} + D \times \Omega^2} \tag{13}$$

$$K = 2 \times E \times (D \times \Omega^2 - 1) - 1 \tag{14}$$

where

$D = 0{,}618\ 034$;

$\Delta t = 1/\text{sampling rate}$;

$\Omega = 1/[\tan(p \times \Delta t \times f_c)]$.

Using the values of E and K, the Bessel averaged response of X to a step input S_i shall be calculated as follows:

$$Y_i = Y_{i-1} + E \times (S_i + 2 \times S_{i-1} + S_{i-2} - 4 \times Y_{i-2}) + K \times (Y_{i-1} - Y_{i-2}) \tag{15}$$

where

$S_{i-2} = S_{i-1} = 0$;

$S_i = 1$;

$Y_{i-2} = Y_{i-1} = 0$.

The times t_{10} and t_{90} shall be interpolated. The difference in time between t_{90} and t_{10} defines the response time t_F for that value of f_c. If this response time is not close enough to the required response time, iteration shall be continued until the actual response time is within 1 % of the required response as follows:

$$|(t_{90} - t_{10}) - t_F| = 0{,}01\ t_F \tag{16}$$

Example of calculations used for the first and second iteration are given in Annex D.

10.2.3 Calculation of Bessel averaged smoke

Once the proper Bessel algorithm constants E and K have been calculated in accordance with 10.2.2, the Bessel algorithm shall then be applied to the instantaneous smoke trace using Formula (15).

The Bessel algorithm is recursive in nature. Thus it needs some initial input values of S_{i-1} and S_{i-2} and initial output values Y_{i-1} and Y_{i-2} to get the algorithm started. These may be assumed to be 0.

The resultant Bessel averaged smoke values are then used to calculate the appropriate smoke values as described in Annex A.

10.3 Ambient correction

10.3.1 General

For engine type approval, the atmospheric factor, f_a, shall be within a band of 0,98 and 1,02 (see 5.1.2). If f_a lies within a band of 0,93 and 1,07, smoke shall be corrected in accordance with Formula (19), since smoke is largely dependent on atmospheric conditions. However, no correction is allowed in the 0,98 to 1,02 band.

© ISO 2012 – All rights reserved

Copyright International Organization for Standardization
Provided by IHS under license with ISO
No reproduction or networking permitted without license from IHS
Not for Resale

The air density correction equations provided in this clause reflect the best fit nominal sensitivity of a sample of evaluated engines/vehicles. Some engines are more sensitive and some are less sensitive to the air density changes predicted by the adjustment equations. In light of this, applying the correction equations to specific engines/vehicles of unknown air density sensitivity, the adjustment equations can only be considered approximate. It is recommended that regulatory agencies adopting this procedure in enforcement programmes make some allowance for the fact that the air density sensitivity of individual vehicles tested in the programme will, in general, not be known precisely and may be different than that indicated by nominal adjustment.

10.3.2 Reference conditions

The correction factor of 10.3.3 accounts for engine intake dry air density. The reference dry air density is 1,157 5 kg/m^3 at the reference temperature of 298 K and the reference pressure of 99 kPa (see 5.1.1).

10.3.3 Ambient density smoke correction

The correction shall be applied to smoke values expressed as a light absorption coefficient or "k". The correction shall be applied to the Bessel-averaged peak smoke values, and not to the raw smoke trace. Opacity values must be converted to k using Formula (10) and may then be reconverted to opacity units after making the correction. Formula (17) shall be used.

$$K_S = \frac{1}{19{,}952\rho^2 - 48{,}259\rho + 30{,}126} \tag{17}$$

where

$$\rho = \frac{p_S \times 10^3}{287 \times T_a} \tag{18}$$

Using Formula (17), smoke values in Annexes A and B shall be corrected from "observed" to "corrected" values of light absorption coefficient using Formula (19).

$$k_{corr} = K_S \times k_{obs} \tag{19}$$

10.4 Test report

The test report shall contain the data specified in ISO 8178-6.

11 Determination of smoke

11.1 General

11.2 and 11.3 and Figures 1 and 2 contain detailed descriptions of the recommended opacimeter systems. Since various configurations can produce equivalent results, exact conformance with Figures 1 and 2 is not required. Additional components such as instruments, valves, solenoids, pumps and switches may be used to provide additional information and coordinate the functions of the component systems. Other components which are not needed to maintain the accuracy on some systems may be excluded if their exclusion is based upon good engineering judgement.

The principle of measurement is that light is transmitted through a specific length of the smoke under investigation and that proportion of the incident light which reaches a receiver is used to assess the light obscuration properties of the medium. The smoke measurement depends upon the design of the apparatus and may be carried out in the exhaust pipe (full-flow in-line opacimeter), at the end of the exhaust pipe (full-flow end-of-line opacimeter) or by taking a sample from the exhaust pipe (partial-flow opacimeter). For the determination of the light absorption coefficient from the opacity signal, the optical path length of the instrument shall be supplied by the instrument manufacturer.

© ISO 2012 – All rights reserved
Copyright International Organization for Standardization
Provided by IHS under license with ISO
No reproduction or networking permitted without license from IHS
Not for Resale

11.2 Full-flow opacimeter

11.2.1 General

Two general types of full-flow opacimeters may be used (see Figure 1). With the in-line opacimeter, the opacity of the full exhaust plume within the exhaust pipe is measured. With this type of opacimeter, the effective optical path length is a function of the opacimeter design.

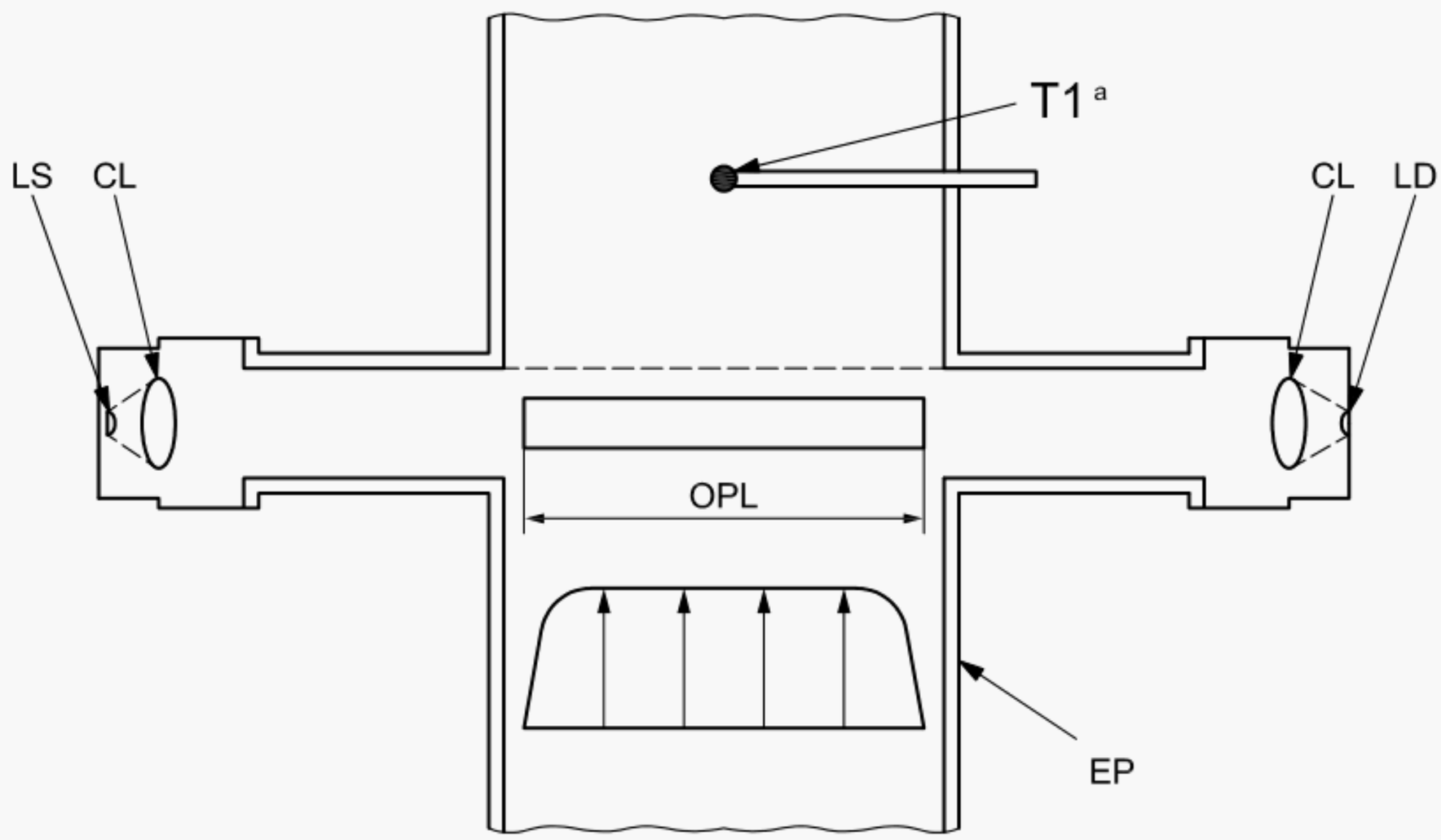

Figure 1— Full-flow opacimeter

With the end-of-line opacimeter, the opacity of the full exhaust plume is measured as it exits the exhaust pipe. With this type of opacimeter, the effective optical path length is a function of the exhaust pipe design and the distance between the end of the exhaust pipe and the opacimeter.

11.2.2 Components of full-flow opacimeter (see Figure 1)

11.2.2.1 EP: exhaust pipe

With an in-line opacimeter, there shall be no change in the exhaust pipe diameter within 3 exhaust pipe diameters before and after the measuring zone. If the diameter of the measuring zone is greater than the diameter of the exhaust pipe, a pipe gradually convergent before the measuring zone is recommended.

With an end-of-line opacimeter, the terminal 0,6 m of the exhaust pipe shall be of circular cross section and be free from elbows and bends. The end of the exhaust pipe shall be cut off squarely. The opacimeter shall be mounted centrally to the plume within 25 mm ± 5 mm of the end of the exhaust pipe.

11.2.2.2 OPL: optical path length

The length of the smoke-obscured optical path between the opacimeter light source and the receiver, corrected as necessary for non-uniformity due to density gradients and fringe effect. The optical path length shall be submitted by the instrument manufacturer taking into account any measures against sooting (e.g. purge air). If the optical path length is not available, it shall be determined in accordance with 11.6.5 of ISO 11614:1999. For the correct determination of the optical path length, a minimum exhaust gas velocity of 20 m/s is required.

© ISO 2012 – All rights reserved

Copyright International Organization for Standardization
Provided by IHS under license with ISO
No reproduction or networking permitted without license from IHS
Not for Resale

11.2.2.3 LS: light source

The light source shall be an incandescent lamp with a colour temperature in the range of 2 800 to 3 250 K or a green light emitting diode (LED) with a spectral peak between 550 nm and 570 nm. The light source shall be protected against sooting by means that do not influence the optical path length beyond the manufacturer's specifications.

11.2.2.4 LD: light detector

The detector shall be a photocell or a photodiode (with a filter, if necessary). In the case of an incandescent light source, the receiver shall have a peak spectral response similar to the phototopic curve of the human eye (maximum response) in the range of 550 nm to 570 nm, to less than 4 % of that maximum response below 430 nm and above 680 nm. The light detector shall be protected against sooting by means that do not influence the optical path length beyond the manufacturer's specifications.

11.2.2.5 CL: collimating lens

The light output shall be collimated to a beam with a maximum diameter of 30 mm. The rays of the light beam shall be parallel within a tolerance of 3° of the optical axis.

11.2.2.6 T1: temperature sensor (optional)

For monitoring the exhaust gas temperature during the test.

11.3 Partial-flow-opacimeter

11.3.1 General

With the partial flow opacimeter (see Figure 2), a representative exhaust sample is taken from the exhaust pipe and passed through a transfer line to the measuring chamber. With this type of opacimeter, the effective optical path length is a function of the opacimeter design. The response times referred to in 11.2 apply to the minimum flow rate of the opacimeter, as specified by the instrument manufacturer.

© ISO 2012 – All rights reserved
Copyright International Organization for Standardization
Provided by IHS under license with ISO
No reproduction or networking permitted without license from IHS
Not for Resale

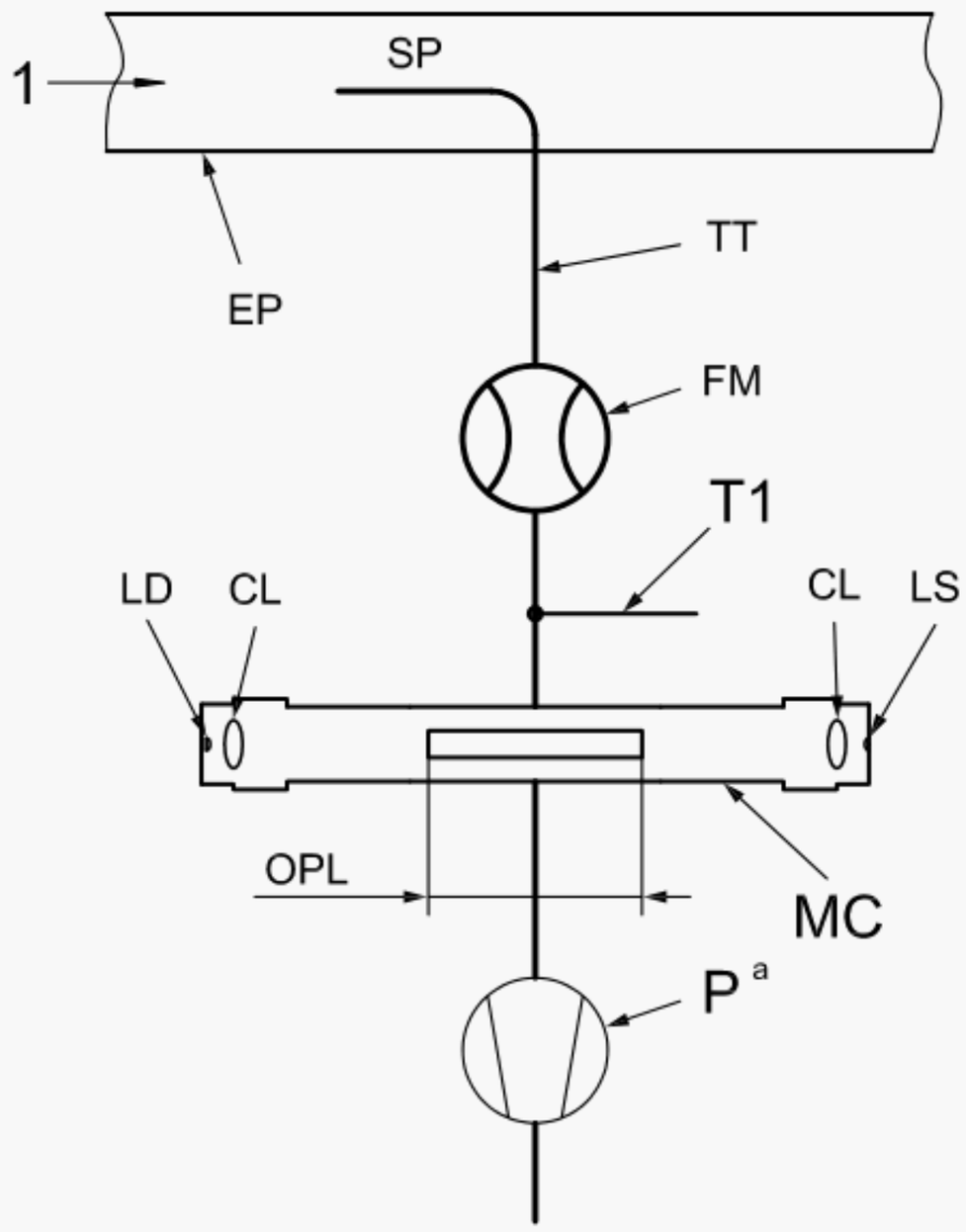

Key

1 exhaust

a Optional.

Figure 2— Partial-flow opacimeter

11.3.2 Components of partial-flow opacimeter (see Figure 2)

11.3.2.1 EP: exhaust pipe

The exhaust pipe shall be a straight pipe of at least 6 pipe diameters upstream and 3 pipe diameters downstream of the tip of the probe.

11.3.2.2 SP: sampling probe

The sampling probe shall be an open tube facing upstream on or about the exhaust pipe centerline. The clearance with the wall of the tailpipe shall be at least 5 mm. The probe diameter shall ensure a representative sampling and a sufficient flow through the opacimeter.

11.3.2.3 TT: transfer tube

The transfer tube shall:

— be as short as possible and ensure an exhaust gas temperature of 373 K ± 30 K (100 °C ± 30 °C) at the entrance to the measuring chamber;

— have a wall temperature sufficiently above the dew point of the exhaust gas to prevent condensation;

— be equal to the diameter of the sampling probe over the entire length;

— have a response time which is part of the physical response time t_p of less than 0,05 s at minimum instrument flow, as determined in accordance with 3.7.3;

© ISO 2012 – All rights reserved

Copyright International Organization for Standardization
Provided by IHS under license with ISO
No reproduction or networking permitted without license from IHS
Not for Resale

— have no significant effect on the smoke peak.

11.3.2.4 FM: flow monitoring device

Flow monitoring to detect the correct flow into the measuring chamber. The minimum and maximum flow rates shall be specified by the instrument manufacturer, and shall be such that the response time requirement of TT and the optical path length specifications are met. The flow monitoring device may be close to the sampling pump, P, if used.

11.3.2.5 MC: measuring chamber

The measuring chamber shall have a non-reflective internal surface or equivalent optical environment. The impingement of stray light on the detector due to internal reflections of diffusion effects shall be reduced to a minimum.

The pressure of the gas in the measuring chamber shall not differ from the atmospheric pressure by more than 0,75 kPa. Where this is not possible by design, the opacimeter reading shall be converted to atmospheric pressure.

The wall temperature of the measuring chamber shall be set to within ± 5 K between 343 K (70 °C) and 373 K (100 °C), but in all cases sufficiently above the dew point of the exhaust gas to prevent condensation. The measuring chamber shall be equipped with appropriate devices for measuring the temperature.

11.3.2.6 OPL: optical path length

The length of the smoke-obscured optical path between the opacimeter light source and the receiver, corrected as necessary for non-uniformity due to density gradients and fringe effect. The optical path length shall be submitted by the instrument manufacturer taking into account any measures against sooting (e.g. purge air). If the optical path length is not available, it shall be determined in accordance with 11.6.5 of ISO 11614:1999.

11.3.2.7 LS: light source

The light source shall be an incandescent lamp with a colour temperature in the range of 2 800 K to 3 250 K or a green light emitting diode (LED) with a spectral peak between 550 nm and 570 nm. The light source shall be protected against sooting by means that do not influence the optical path length beyond the manufacturer's specifications.

11.3.2.8 LD: light detector

The detector shall be a photocell or a photodiode (with a filter, if necessary). In the case of an incandescent light source, the receiver shall have a peak spectral response similar to the phototopic curve of the human eye (maximum response) in the range of 550 nm to 570 nm, to less than 4 % of that maximum response below 430 nm and above 680 nm. The light detector shall be protected against sooting by means that do not influence the optical path length beyond the manufacturer's specifications.

11.3.2.9 CL: collimating lens

The light output shall be collimated to a beam with a maximum diameter of 30 mm. The rays of the light beam shall be parallel within a tolerance of 3° of the optical axis.

11.3.2.10 T1: temperature sensor

For monitoring the exhaust gas temperature at the entrance to the measuring chamber.

11.3.2.11 P: sampling pump (optional)

A sampling pump downstream of the measuring chamber may be used to transfer the sample gas through the measuring chamber.

© ISO 2012 – All rights reserved
Copyright International Organization for Standardization
Provided by IHS under license with ISO
No reproduction or networking permitted without license from IHS
Not for Resale

Annex A
(normative)

Test cycle for variable-speed off-road engines

A.1 Scope

The smoke cycle described in this annex consists of two parts: a free acceleration test and a loaded acceleration test. This smoke cycle is applicable to those variable speed engines that are included in the C1 cycle of ISO 8178-4. The transient smoke cycle is expected to complement the steady-state emission measurements and the two together provide for control of emissions under a wide variety of operating conditions. Furthermore, the smoke test is intended to offer a method of characterizing an engine's emissions when installed in a machine, and to provide for measurement of smoke emissions both at the manufacturer and in the field.

The C1 category of ISO 8178-4 is for "off-road vehicles, diesel powered off-road industrial equipment". Typical applications for C1 engines included in the scope of this annex include, but are not limited to

— industrial drilling rigs, compressors etc.,

— construction equipment including wheel loaders, bulldozers, crawler tractors, crawler loaders,

— truck-type loaders, off-highway trucks, hydraulic excavators etc.,

— agricultural equipment, rotary tillers,

— forestry equipment,

— self-propelled agricultural vehicles (including tractors),

— material handling equipment,

— fork lift trucks,

— road maintenance equipment (motor graders, road rollers, asphalt finishers),

— snow plough equipment,

— airport support equipment,

— aerial lifts, and

— mobile cranes.

The transient smoke test described in this annex contains acceleration rates that may not be achievable by all sizes of engines, or may not be relevant to certain applications. The scope of this annex has thus far been confirmed for engines with a rated power output up to 1 500 kW. Engines with only one or two cylinders may have special difficulty in running the cycles. Additionally, smoke measurement from one- or two-cylinder engines may include a pulsation that precludes reliable measurements unless a damping volume (muffler) is used. Special test procedures for unique applications may be used if agreed upon by the parties involved.

A.2 Terms and definitions

A.2.1
free acceleration test
portion of the procedure consisting of accelerating the engine against its own internal inertia, including flywheel, from low idle speed to high idle speed

© ISO 2012 – All rights reserved

Copyright International Organization for Standardization
Provided by IHS under license with ISO
No reproduction or networking permitted without license from IHS
Not for Resale

A.2.2
free acceleration time
FAT
time, in seconds, required for the engine to go from 5 % above low idle speed to 95 % of rated speed in the free acceleration test, this time being used as the basis for the acceleration times used in the loaded transient test

A.2.3
free acceleration smoke
FAS
highest 1 s Bessel averaged smoke value obtained during an individual free acceleration in A.3.2.1 e) and the average of the three individual free accelerations of A.3.2.1 e)

A.2.4
loaded transient test
portion of the procedure consisting of running the engine through a clearly defined cycle consisting of a loaded acceleration mode, a rated speed, full load mode, and a lug mode

NOTE Three different loaded acceleration times are used, with times of 3 x, 6 x, and 9 x FAT.

A.2.5
peak smoke value
PSV
highest 1 s Bessel averaged value that occurs in each of the three acceleration modes of the loaded transient test, there being three values of PSV, one each for the 3 x FAT, 6 x FAT, and 9 x FAT acceleration times

A.2.6
lug smoke value
LSV
highest 1 s Bessel averaged value obtained during the lug mode of the loaded transient test and the average of the three individual values

NOTE The three lug modes (at the end of the 3 x, 6 x, and 9 x FAT accelerations) are identical, and thus are expected to yield similar results.

A.2.7
intermediate speed
endpoint of the lug mode of the loaded transient test as defined in 3.6 of ISO 8178-4:2007.

A.3 Test cycle

Acceleration times between the free acceleration time and nine times the free acceleration time are employed in this test procedure. This will allow the smoke tests to bracket the free acceleration rates typical of those which occur when the engine undergoes a free acceleration in the machine and will also include loaded acceleration rates representative of those which occur during machine operation. The use of a number of acceleration times will provide smoke values under a variety of operating conditions, which will facilitate the use of the family or group testing concept contained in ISO 8178-7 and ISO 8178-8. Different acceleration times may be more relevant for certain engines and applications, and may be used if agreed upon by the parties involved.

A.3.1 Preconditioning of the engine

The engine shall be warmed up at the rated power in order to stabilize the engine parameters in accordance with the recommendations of the manufacturer.

A preconditioning phase should also protect the actual measurement against the influence of deposits in the exhaust system resulting from a former test.

© ISO 2012 – All rights reserved
Copyright International Organization for Standardization
Provided by IHS under license with ISO
No reproduction or networking permitted without license from IHS
Not for Resale

A.3.2 Free acceleration test

A.3.2.1 General

The free acceleration test is the first part of the test cycle for engine applications covered by this annex. It shall be performed immediately following the preconditioning, as described in A.3.1. The free acceleration test is a procedure that accelerates the engine from low idle speed to high idle speed against its own internal inertia and the inertia provided by the engine's flywheel. The engine tested shall be equipped with a flywheel and other rotating components that provide an inertia on the low end of the range of inertias available for the rating that is being tested. This will provide a value for FAT that is typically of the fastest acceleration that occurs in practice, thus providing for smoke control under the widest range of conditions. The free acceleration test is intended to be run with the engine decoupled from the dynamometer.

NOTE It is permissible to use a clutch to decouple the engine from the dynamometer as long as the inertia of that portion of the clutch that continues to rotate with the engine does not exceed 25 % of the total engine inertia. It is permissible to leave the engine coupled to the dynamometer if the dynamometer is used to simulate zero inertia. The free acceleration test can be run with the dynamometer connected if agreed upon by the parties involved.

The free acceleration test has the following general sequence. The sequence is shown graphically in Figure A.1.

a) The engine shall be stabilized at low idle speed for 15 s ± 5 s.

b) The speed control lever shall be moved rapidly to and held in the wide open position until the engine reaches its governed high idle (no load) speed.

c) The speed control lever shall be returned to the closed position and the engine allowed to return to its low idle speed.

d) The above sequence shall be repeated 2 times as practice runs in order to clean out the exhaust system.

e) After the 3 practice runs, the above sequence shall be repeated until 3 successive runs meet the stability criteria as described in A.3.2.2.

A.3.2.2 Test validation criteria – Free acceleration test

The free acceleration test results shall be considered valid only after the following test cycle criteria have been met.

The arithmetical difference between the highest and lowest maximum 1 s Bessel averaged smoke values from the three successive free acceleration tests shall not exceed 5 % opacity.

Additional test validation criteria are given in 5.1.2 [ambient (atmospheric) conditions validation criteria] and 7.3.2.3 (opacimeter zero drift).

A.3.2.3 Determination of free acceleration time (FAT)

FAT is the basis for loaded acceleration times (A.3.4.2). The free acceleration time for an individual free acceleration in A.3.2.1 e) is the time the engine speed goes from 5 % above low idle speed to 95 % of rated speed. FAT is the average of the three individual free accelerations in A.3.2.1 e).

© ISO 2012 – All rights reserved
Copyright International Organization for Standardization
Provided by IHS under license with ISO
No reproduction or networking permitted without license from IHS
Not for Resale

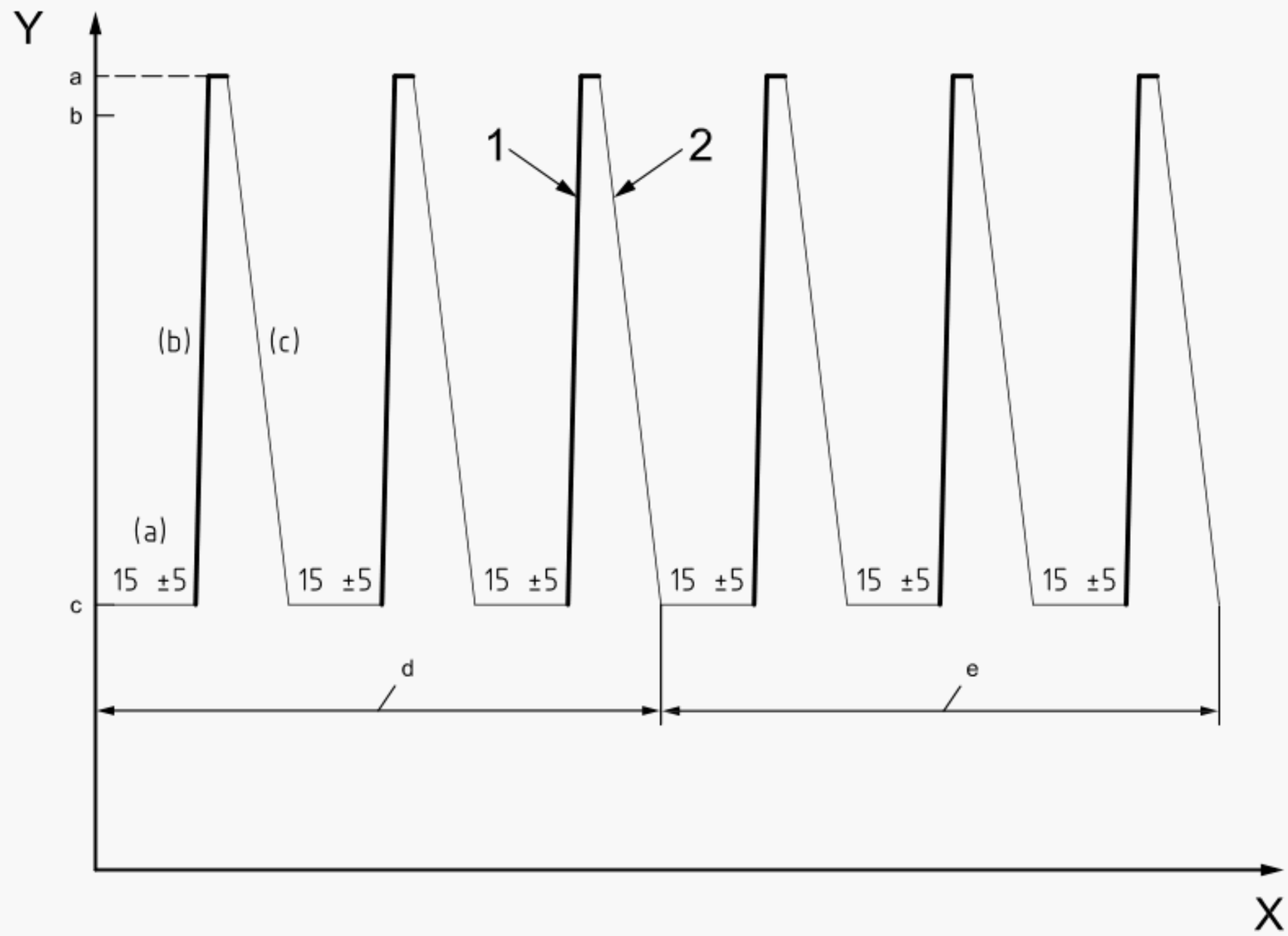

Key

Y engine speed

X time, s

1 full “throttle”

2 closed “throttle”

NOTE (a), (b) and (c) refer to A.3.2.1 a), b), and c).

[a] High idle.

[b] Rated.

[c] Idle.

[d] Practice runs.

[e] Actual runs.

Figure A.1— Free acceleration test

A.3.3 Reconditioning of the engine

The engine shall be reconnected to the dynamometer. The engine shall be warmed up at the rated power in order to stabilize the engine parameters according to the recommendations of the manufacturer.

A reconditioning phase should also protect the actual measurement against the influence of deposits in the exhaust system resulting from a former test.

A.3.4 Loaded transient test

A.3.4.1 General

The loaded transient test is the second part of the test cycle, and has the sequence as described in A.3.4.3. It shall immediately follow the reconditioning of the engine. The sequence is shown graphically in Figure A.2.

© ISO 2012 – All rights reserved
Copyright International Organization for Standardization
Provided by IHS under license with ISO
No reproduction or networking permitted without license from IHS
Not for Resale

A.3.4.2 Loaded transient test times

The acceleration times of the loaded transient test are multiples of the free acceleration test time determined in A.3.2.3. The engine acceleration times to be used in the loaded transient test are to be 3 x FAT, 6 x FAT and 9 x FAT. Each of these resultant times is to be the time from when the engine speed is 5 % above low idle speed until it reaches 95 % of rated speed. The values of 3 x FAT, 6 x FAT and 9 x FAT may be rounded to the nearest second.

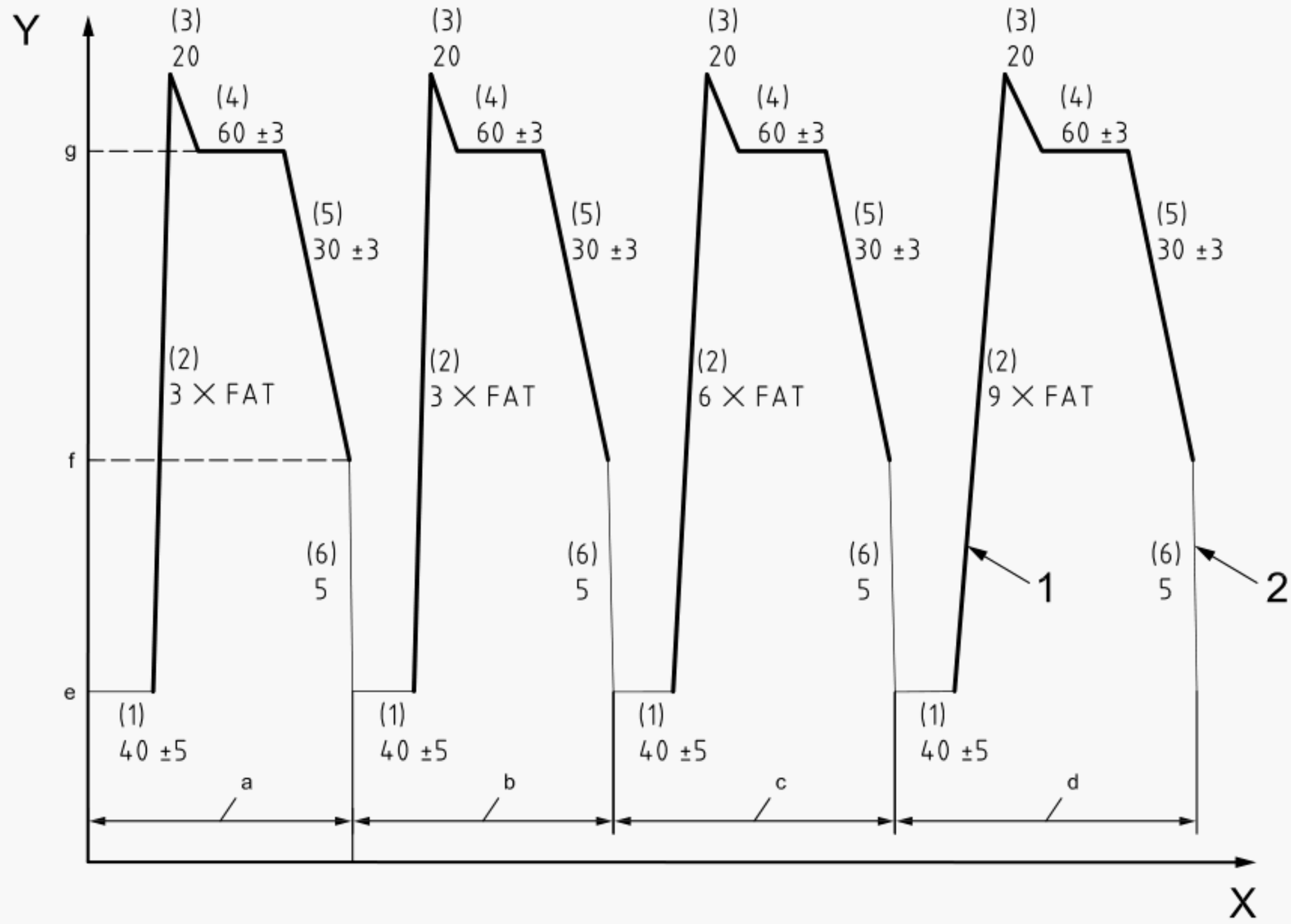

Key

Y engine speed

X time, s

NOTE (1), (2), (3), (4), (5) and (6) refer to A.3.4.3 a).

a Loaded acceleration I (conditioning).

b Loaded acceleration II (3 x FAT).

c Loaded acceleration III (6 x FAT).

d Loaded acceleration IV (9 x FAT).

e Idle.

f Intermediate.

g Rated.

Figure A.2 — Loaded acceleration test

A.3.4.3 Conducting a loaded transient test

The loaded transient test begins with a conditioning cycle in order to improve the repeatability of the results. The conditioning cycle is followed by three loaded acceleration cycles that differ only in the rate of the loaded acceleration. The loaded acceleration is followed by full load rated speed stabilization and engine lug down. The linearity specifications in 2) below apply only to electric dynamometers and are intended to prevent the

© ISO 2012 – All rights reserved

Copyright International Organization for Standardization
Provided by IHS under license with ISO
No reproduction or networking permitted without license from IHS
Not for Resale

engine from being operated in an unusual fashion so as to achieve low smoke values. Furthermore, no motoring of the engine is allowed. The loaded transient test sequence is as follows:

a) Conditioning cycle:

   1) The engine shall be operated with the speed control lever in the closed position at low idle speed for 40 s ± 5 s.

   2) From the low idle speed the speed control lever shall be moved rapidly to, and held in, the wide open position. The engine shall accelerate such that the time from 5 % above low idle speed to 95 % of the rated speed is 3 x FAT seconds. The engine speed versus time between 5 % above low idle speed and 95 % of rated speed shall be linear within ± 100 min^{-1} or ± 5 % of rated speed, whichever is greater.

   3) Within 20 s of the engine reaching 95 % of rated speed point, the necessary dynamometer load shall be applied in order to stabilize the engine at rated speed, full load.

   4) Rated speed and full load shall be maintained for 60 s ± 5 s.

   5) The dynamometer shall be adjusted as necessary to lug the speed down under full load conditions to the intermediate speed. The rate of speed change shall be linear, and the time from the start of the lug down until reaching the intermediate speed point shall be 30 s ± 3 s.

   6) Within 5 s of the engine reaching the intermediate speed, the speed control level shall be returned to the closed position and the engine allowed to return to its low idle speed.

b) 3 x FAT loaded acceleration:

   Repeat 1) to 6).

c) 6 x FAT loaded acceleration:

   Repeat 1) to 6) with the loaded acceleration time in 2) replaced with 6 x FAT seconds.

d) 9 x FAT loaded acceleration:

   Repeat 1) to 6) with the loaded acceleration time in 2) replaced with 9 x FAT seconds.

The above steps shall be repeated until the engine speed, time and linearity criteria of this clause have been satisfied except if the acceleration is below 0,5 s.

A.3.4.4 Conducting a loaded transient test – Alternative procedure

As an alternative to the single “four-cycle” test described in A.3.4.3, the loaded transient test can be conducted by running three “two-cycle” tests. This will allow inertia to be changed between tests, so that the tests can be run without using a computer-controlled dynamometer. Each test will consist of the conditioning cycle 1) to 6) of A.3.4.3 a) being run two times. For the first test, the loaded acceleration time for A.3.4.3 a) 2) will be 3 x FAT. For the second test the time for A.3.4.3 a) 2) will be 6 x FAT. For the third test the time for A.3.4.3 a) 2) will be 9 x FAT. Results from the second cycle of each test shall be used for official results.

A.4 Analysis of results

A.4.1 General

This clause describes how to analyse the results of the free acceleration test and the loaded transient test. Many opacimeters used for this test have a smoke output signal that is an $X = 0{,}5$ s Bessel average smoke according to the algorithm described in 12.2. For these opacimeters further signal conditioning to produce the “$X = 1$ s” smoke results is needed, and the value of $(t_p^2 + t_e^2)$ used in Formula (11) in 12.2.2 is 0,25. Analysis of raw smoke results, those not already processed according to the 0,5 s Bessel algorithm, should use a $(t_p^2 + t_e^2)$ value that represents the opacimeter system.

Reported smoke values shall also be corrected for ambient conditions as described in 10.3.

© ISO 2012 – All rights reserved
Copyright International Organization for Standardization
Provided by IHS under license with ISO
No reproduction or networking permitted without license from IHS
Not for Resale

A.4.2 Peak smoke value (PSV_F, PSV_3, PSV_6, PSV_9)

Values for PSV shall be calculated for the free acceleration (PSV_F) and each of the three loaded accelerations (PSV_3, PSV_6 and PSV_9). These values are the maximum values of the $X = 1$ s Bessel average smoke that occurs during the acceleration event. Care must be taken to ensure that the smoke data that is analysed corresponds to the time during which the acceleration event occurs (see 10.1.1). The free acceleration event is A.3.2.1 b). Loaded accelerations of time 3 s, 6 s and 9 s areb) 2), c) and d) respectively of A.3.4.3 (or their equivalents in A.3.4.4).

The methodology for calculating Bessel averaged numbers can be found in 10.2. For peak smoke values the value of X in Formula (11) is 1 s.

A.4.3 Lug smoke value (LSV)

Values for LSV shall be calculated for the lug portion of each of the three loaded transient tests (LSV_3, LSV_6 and LSV_9). These values are the maximum values of an $X = 1$ s Bessel average smoke that occurs during the lugging event. Care must be taken to ensure that the smoke data that is analysed corresponds to the time during which the lugging event occurs (see 10.1.1). The lugging event is b) 5), c) and d) respectively of A.3.4.3 (or their equivalents in A.3.4.4).

The methodology for calculating Bessel averaged numbers can be found in 10.2. For lug smoke values the value of X in Formula (11) is 1 s.

The lug smoke value that is reported, LSV, is the average of LSV_3, LSV_6 and LSV_9.

A.5 Reported results

The following smoke values shall be reported: PSV_F, PSV_3, PSV_6, PSV_9 and LSV.

© ISO 2012 – All rights reserved
Copyright International Organization for Standardization
Provided by IHS under license with ISO
No reproduction or networking permitted without license from IHS
Not for Resale

Annex B
(normative)

Test cycle for constant-speed off-road engines

B.1 Scope

Engines within the scope of this annex either cannot or do not operate at varying speeds. However, some constant speed engines can undergo rapid and substantial changes in load, an event that can lead to brief episodes of smoke emittance.

The transient smoke cycle is expected to complement the steady-state emission measurements and the two together will provide for control of emissions under a wide variety of operating conditions. Furthermore, the smoke test is intended to offer a method of characterizing an engine's emissions when installed in a machine and to provide for measurement of smoke emissions both at the manufacturer and in the field.

Testing of the engine with the highest fuel flow (the parent engine in the family according to the provisions of 5.2 of 8178-7:1996) is expected to yield the worst case of smoke emission.

This annex is applicable to the D2, G1, and G2 categories of engine as defined in Clause 8 of 8178-4:2007 and has thus been confirmed for engines with a rated power output up to 1 500 kW.

Typical applications include, but are not limited to

a) Category D2:

- gas compressors;
- generating sets with intermittent load including generating sets on board of ships and trains (not for propulsion);
- turf care;
- chippers;
- snow removal equipment;
- sweepers.

b) Category G1:

- pedestrian controlled rotary or cylinder lawn mowers;
- front or rear engine riding lawn mowers;
- rotary tillers;
- edge trimmers;
- lawn sweepers;
- waste disposers;
- sprayers;
- snow removal equipment;
- golf carts.

© ISO 2012 – All rights reserved
Copyright International Organization for Standardization
Provided by IHS under license with ISO
No reproduction or networking permitted without license from IHS
Not for Resale

c) Category G2:

— portable generators, pumps, welding sets and air compressors;

— lawn and garden equipment which operates at engine-rated speed.

B.2 Terms and definitions

B.2.1
smoke test
test consisting of rapid load application at a constant engine speed

B.2.2
peak smoke value
PSV
average of the three highest 1 s Bessel averaged smoke values obtained during the load application tests

B.2.3
steady-state smoke value
SSSV
highest smoke recorded during steady-state operation of the engine

B.3 Test cycle

B.3.1 Engine load step

This subclause describes how to calculate the load step that will applied to the engine. The load step that shall be applied is a function of the brake mean effective pressure (p_{me}) at the declared power. When the constant speed engine is used in a generator application, the declared power shall be the power produced by the engine at the prime power rating of the generator, as defined in ISO 8528-1. For engines used in applications other than generators, the declared power shall be the rated power of the engine as specified by the manufacturer.

The engine's p_{me} shall be calculated as follows:

$$p_{me} = \frac{P \times 2000}{V_d \times N} \quad \text{for 4-stroke engines}$$

$$p_{me} = \frac{P \times 1000}{V_d \times N} \quad \text{for 2-stroke engines}$$

where

p_{me} is the brake mean effective pressure, in kilopascals;

P is the declared power, in kilowatts;

V_d is the displaced volume, in litres;

N is the engine speed, in revolutions per second.

Figures B.1 and B.2 specify the amount of load (percent of declared power) that shall be applied to the engine, as a function of the p_{me} of the engine. Recognizing that most constant speed applications are in generators, the load step is that specified for generators in ISO 8528-5. Figure B.1 applies to four-stroke engines and Figure B.2 applies to two-stroke engines. The load given by Figure B.1 or B.2 is that load which is applied in B.3.3 c).

B.3.2 Preconditioning of the engine

The engine shall be warmed up at the rated power in order to stabilize the engine parameters according to the recommendations of the manufacturer.

© ISO 2012 – All rights reserved

Copyright International Organization for Standardization
Provided by IHS under license with ISO
No reproduction or networking permitted without license from IHS
Not for Resale

A preconditioning phase should also protect the actual measurement against the influence of deposits in the exhaust system resulting from a former test.

B.3.3 Smoke test procedure

a) Immediately after preconditioning operate the engine for 40 s ± 5 s at fuel stop power and record its smoke emission.

b) Operate the engine at 10 % of declared power for 40 s ± 5 s.

c) Apply the step load specified in B.3.1 as rapidly as possible.

NOTE The time it takes the engine to accept the step load will vary depending upon the requirements of the application.

d) Operate the engine at this load for 40 s ± 5 s.

e) Repeat steps b) to d) to complete three cycles.

B.4 Analysis of results

B.4.1 General

This clause describes how to analyse the results of the smoke test. Many opacimeters used for this test have a smoke output signal that is an $X = 0{,}5$ s Bessel average smoke according to the algorithm described in 10.2. For these opacimeters further signal conditioning to produce the "$X = 1$ s" smoke results is needed, and the value of $(t_p^2 + t_e^2)$ used in Formula (11) in 12.2.2 is 0,25. Analysis of the raw smoke results, those not already processed according to the 0,5 s Bessel algorithm, shall use a $(t_p^2 + t_e^2)$ value that represents the opacimeter system.

Reported smoke values shall also be corrected for ambient conditions as described in 10.4.

B.4.2 Steady-state smoke value (SSSV)

SSSV is the highest smoke recorded during B.3.3 a). No Bessel averaging is required of a steady-state smoke value.

B.4.3 Peak smoke value (PSV)

Determine the highest 1 s Bessel average smoke values that occurs during the three replicates of B.3.3 c). Care must be taken to ensure that the smoke data that is analysed corresponds to the time during which the load application event occurs (see 10.1.1). PSV is the average of the three highest 1 s Bessel averaged smoke values obtained during the load application tests.

B.5 Reported results

The following smoke values shall be reported: PSV and SSSV.

Copyright International Organization for Standardization
Provided by IHS under license with ISO
No reproduction or networking permitted without license from IHS
Not for Resale
© ISO 2012 – All rights reserved

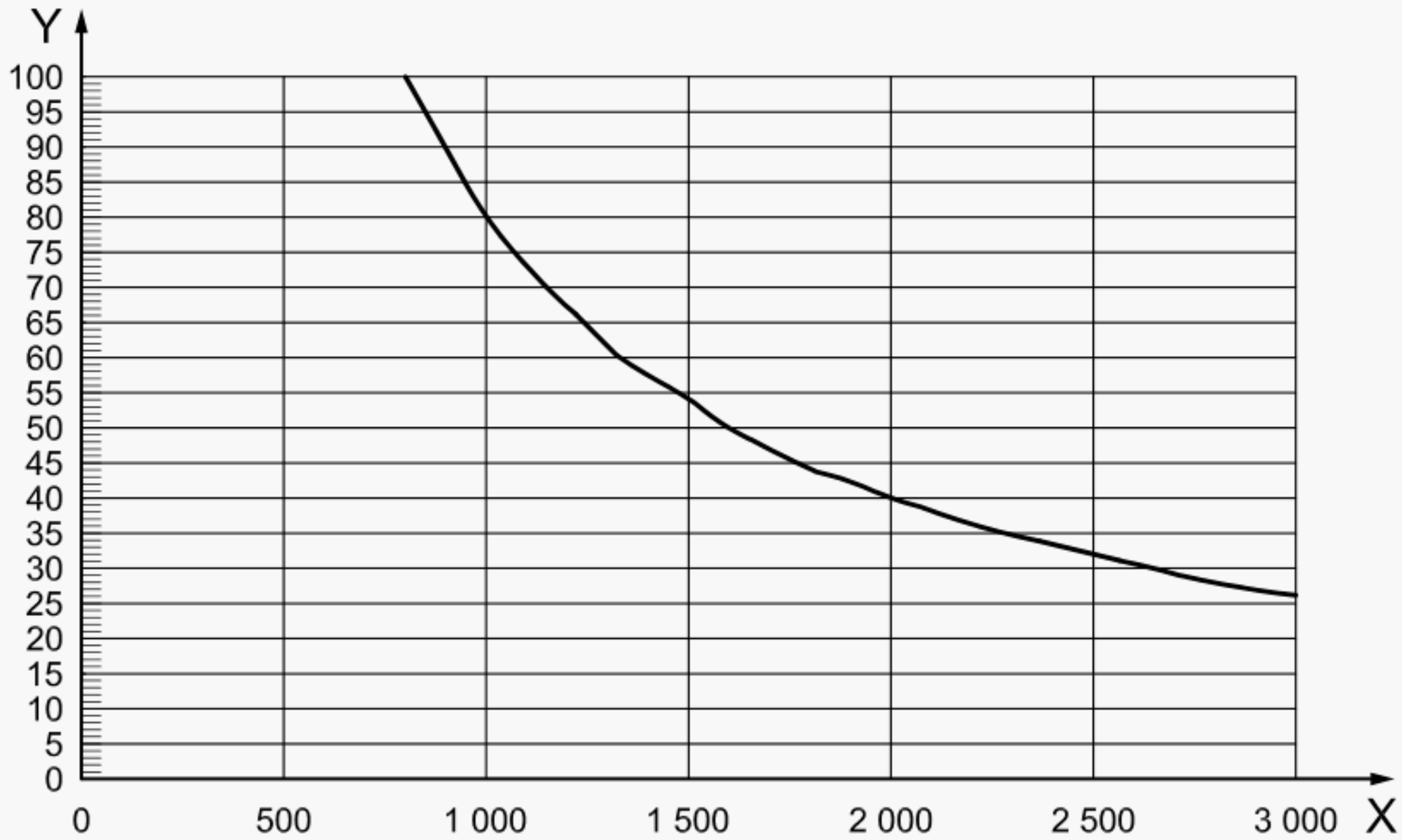

Key

Y load step, % of declared power

X brake mean effective pressure (p_{me}) at declared power, kPa

Figure B.1 — Load step for four-stroke engines

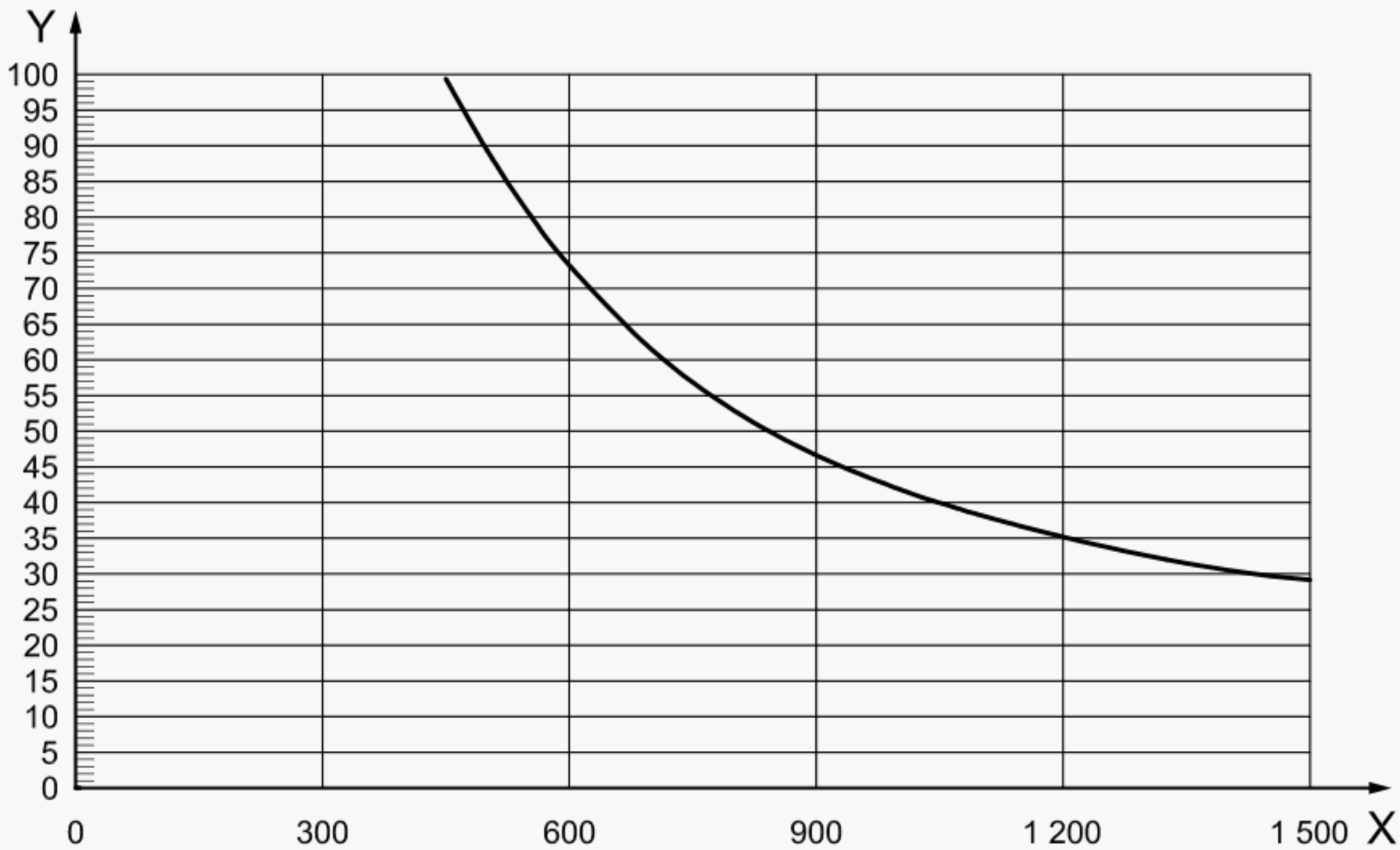

Key

Y load step, % of declared power

X brake mean effective pressure (p_{me}) at declared power, kPa

Figure B.2 — Load step for two-stroke engines

© ISO 2012 – All rights reserved
Copyright International Organization for Standardization
Provided by IHS under license with ISO
No reproduction or networking permitted without license from IHS
Not for Resale

Annex C
(informative)

Remarks on test cycles

The smoke cycles described in Annexes A and B that are mentioned below are intended to produce smoke representative of that which occurs under in-service conditions. Additionally, the measurement methods in this part of ISO 8178 are those that are appropriate for the engines under consideration.

The test cycle described in Annex A is representative of those engines which are used in applications as described in the C1 cycles of ISO 8178-4. The scope of Annex A is thus far confirmed up to a rated power output of 1 500 kW. The test cycle described in Annex B is representative of those engines which are used in applications as described in the D2, G1 and G2 cycles of ISO 8178-4. Extension of this part of ISO 8178 to other applications is foreseen, through the development of additional annexes.

Extension to other power levels (such as power plants) and other applications (such as large ships or locomotives) require serious study. Limitations to acceleration rates (due to engine size) and inclusion of other operating conditions (such as engine starting) needs further definition. Furthermore, some engines may be equipped with speed and or load control systems that preclude the engines from running the cycles described in the annexes. It must be recognized that these control systems may be present, at least in part, to provide smoke control. Special test procedures may be needed to address these circumstances.

The test procedures applicable to the engines dealt with in Annexes A and B are specifically intended for the test bed measurement of an engine. It is envisioned that these tests would be run on a “parent engine” and that the results would be relevant for all engines in the family (see ISO 8178-7) or group (see ISO 8178-8). In some cases (e.g. ships or power plants not subject to engine family or group testing) individual engine testing (monitoring) is favoured over family or group testing. In such instances an annex with a defined smoke cycle has no relevance. Operation of these larger engines on residual fuel, with fluctuating quality, makes the preference for in-use measurement and control even more pronounced.

It is anticipated that measuring difficulties will be experienced on engines that have only a few (one, two and perhaps three) cylinders feeding into an exhaust pipe. This is due to exhaust pressure and flow rate variations on measurement procedures, accuracy and variability.

For all of the above reasons the limitations expressed in Annexes A and B should be respected. Smoke tests on engines outside the limitations of an annex may require a different cycle or measurement procedure.

Work is in process to verify the accuracy of instruments outside the normal size range. This will be taken into account in future editions of this part of ISO 8178.

© ISO 2012 – All rights reserved
Copyright International Organization for Standardization
Provided by IHS under license with ISO
No reproduction or networking permitted without license from IHS
Not for Resale

Annex D
(informative)

Example of calculation procedure

D.1 Scope

Since the application of the Bessel algorithm on filtering is a new averaging procedure in smoke determination, an explanation of the Bessel filter, an example of the design of a Bessel algorithm, and an example of the calculation of the final smoke value is given in this annex.

The constants of the Bessel algorithm depend only on the design of the opacimeter and the sampling rate of the data acquisition system. It is recommended that the opacimeter manufacturer provide the final Bessel filter constants for different sampling rates and that the customer use these constants for designing the Bessel algorithm and for calculating the smoke values.

D.2 General remarks on the Bessel filter

Due to high frequency distortions, the raw opacity signal usually shows a highly scattered trace. To remove these high frequency distortions a Bessel filter is required for the smoke test. The Bessel filter itself is a recursive, second-order low-pass filter which guarantees the fastest signal rise without overshoot.

Assuming a real time raw exhaust plume in the exhaust pipe, each opacimeter shows a delayed and differently measured opacity trace. The delay and the magnitude of the measured opacity trace is primarily dependent on the geometry of the measuring chamber of the opacimeter, including the exhaust sample lines, and on the time needed for processing the signal in the electronics of the opacimeter. The values that characterize these two effects are called the physical and the electrical response time which represent an individual filter for each type of opacimeter. The goal of applying a Bessel filter is to guarantee a uniform overall filter characteristic of the whole opacimeter system, consisting of

— physical response time of the opacimeter (t_p);

— electrical response time of the opacimeter (t_e);

— filter response time of the applied Bessel filter (t_F).

The resulting overall response time of the system (X) is given by

$$X = \sqrt{t_F^{\,2} + t_p^{\,2} + t_e^{\,2}}$$

and must be equal for all kinds of opacimeters in order to give the same smoke value. Therefore, a Bessel filter has to be created in such a way, that the filter response time (t_F) together with the physical response time (t_p) and electrical response time (t_e) of the individual opacimeter must result in the required overall response time (X). Since t_p and t_e are given values for each individual opacimeter, and X is defined to be 1 s in this part of ISO 8178 (see, for example, A.2.5 and A.2.6), t_F can be calculated as follows:

$$t_F = \sqrt{X^2 - t_p^{\,2} - t_e^{\,2}}$$

By definition, the filter response time t_F is the rise time of a filtered output signal between 10 % and 90 % on a step input signal. Therefore the cut-off frequency of the Bessel filter has to be iterated in such a way that the response time of the Bessel filter fits into the required rise time.

In Figure D.1, the traces of a step input signal and Bessel filtered output signal as well as the response time of the Bessel filter (t_F) are shown.

© ISO 2012 – All rights reserved

Copyright International Organization for Standardization
Provided by IHS under license with ISO
No reproduction or networking permitted without license from IHS
Not for Resale

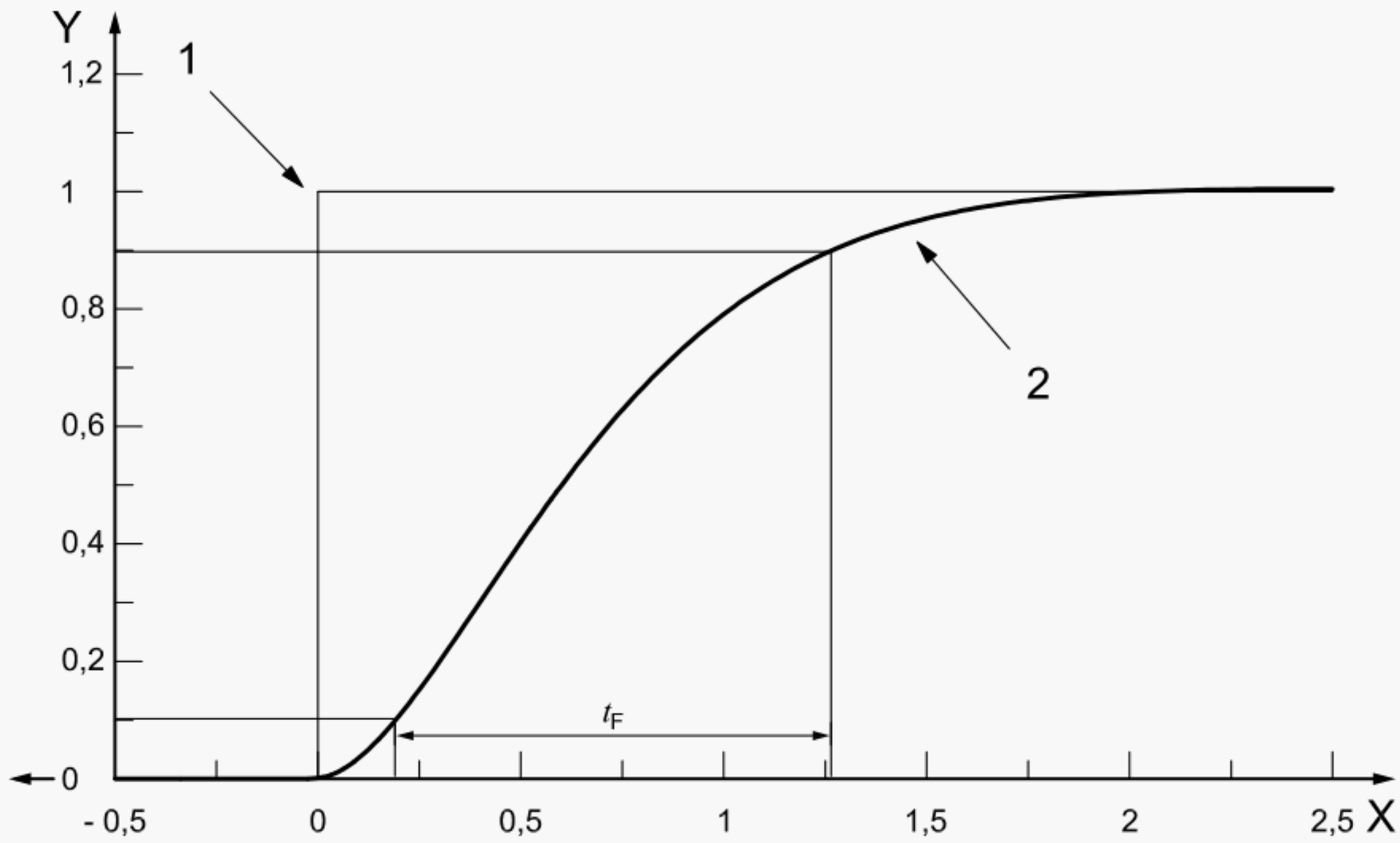

Key

Y signal

X time, s

1 step input signal

2 bessel filtered output signal

Figure D.1 — Traces of a step input signal and the filtered output signal

D.3 Calculation of the Bessel algorithm

D.3.1 General

Designing the final Bessel filter algorithm is a multi-step process which requires several iteration cycles. The scheme of the iteration procedure, which is based upon Clause 10, is shown in Figure D.2.

In the following example, a Bessel algorithm is designed for the peak smoke value (PSV, see A.4.2) in several steps according to the iteration procedure shown in Figure D.2. For the PSV, the overall response time is defined as 1 s. The iteration procedure for LSV is identical.

For the opacimeter and the data acquisition system, the following characteristics are assumed:

— physical response time t_p: — 0,15 s

— electrical response time t_e: — 0,05 s

— overall response time X: — 1 s (by definition for PSV)

— sampling rate: — 150 Hz

Copyright International Organization for Standardization
Provided by IHS under license with ISO
No reproduction or networking permitted without license from IHS
Not for Resale
© ISO 2012 – All rights reserved

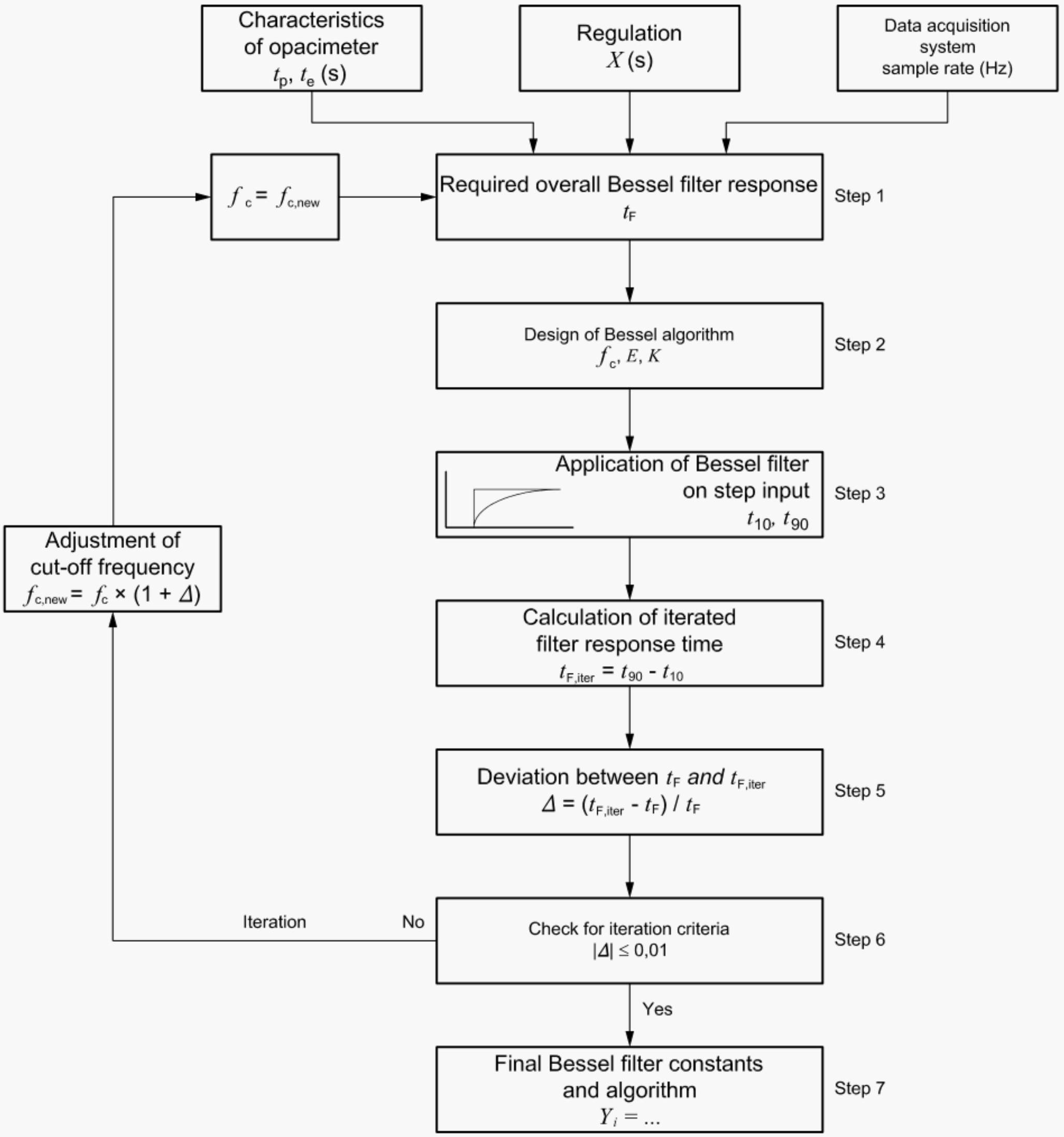

Figure D.2 — Iteration scheme of Bessel filter algorithm

D.3.2 Step 1: required Bessel filter response time t_F

$$t_F = \sqrt{X^2 - \left(t_p^2 + t_e^2\right)}$$

$$t_F = \sqrt{1^2 - \left(0{,}15^2 + 0{,}05^2\right)} = 0{,}987\ 421 \text{ s}$$

D.3.3 Step 2: estimation of cut-off frequency, f_c, and calculation of Bessel constants E and K for first iteration

$$f_c = \pi/(10 \times t_F)$$

© ISO 2012 – All rights reserved

Copyright International Organization for Standardization
Provided by IHS under license with ISO
No reproduction or networking permitted without license from IHS
Not for Resale

$f_c = \pi/(10 \times 0{,}987\,421) = 0{,}318\,161$ Hz

$\Delta t = 1/150$

$\Omega = 1/\tan(\pi \times \Delta t \times f_c)$

$\Omega = 1/\tan(\pi \times 1/150 \times 0{,}318\,161) = 150{,}067\,975$

$$E = \frac{1}{1 + \Omega \times \sqrt{3 \times D} + D \times \Omega^2}$$

$D = 0{,}618\,034$

$$E = \frac{1}{1 + 150{,}067975 \times \sqrt{3 \times 0{,}618034} + 0{,}618034 \times 150{,}067975^2} = 7{,}080\,29 \times 10^{-5}$$

$K = 2 \times E \times (D \times \Omega^2 - 1) - 1$

$K = 2 \times 7{,}080\,29 \times 10^{-5} \times (0{,}618\,034 \times 150{,}067\,975^2 - 1) - 1 = 0{,}970\,781$

This gives the Bessel algorithm:

$Y_i = Y_{i-1} + E \times (S_i + 2 \times S_{i-1} + S_{i-2} - 4 \times Y_{i-2}) + K \times (Y_{i-1} - Y_{i-2})$

$Y_i = Y_{i-1} + 7{,}080\,29 \times 10^{-5} \times (S_i + 2 \times S_{i-1} + S_{i-2} - 4 \times Y_{-2}) + 0{,}970\,781 \times (Y_{i-1} - Y_{i-2})$

where S_i represents the values of the step input signal (either “0” or “1”) and Y_i represents the filtered values of the output signal.

D.3.4 Step 3: application of Bessel filter on step input

The Bessel filter response time t_F is defined as the rise time of the filtered output signal between 10 % and 90 % on a step input signal. For determining the times of 10 % (t_{10}) and 90 % (t_{90}) of the output signal, a Bessel filter has to be applied to a step input using the above values of f_c, E and K.

The index numbers, the time and the values of a step input signal and the resulting values of the filtered output signal for the first and the second iteration are shown in Table D.1. The points adjacent to t_{10} and t_{90} are marked in boldface.

Table D.1 — Values of step input signal and Bessel filtered output signal for the first and second iteration cycle

Index	Time	Step input signal	Filtered output signal	
			Y_i	
	s	S_i	1st iteration	2nd iteration
-2	- 0,013 333	0	0,000 000	0,000 000
-1	- 0,006 667	0	0,000 000	0,000 000
0	0,000 000	1	0,000 071	0,000 084
1	0,006 667	1	0,000 352	0,000 416
2	0,013 333	1	0,000 908	0,001 074
3	0,020 000	1	0,001 731	0,002 046
4	0,026 667	1	0,002 813	0,003 321

© ISO 2012 – All rights reserved
Copyright International Organization for Standardization
Provided by IHS under license with ISO
No reproduction or networking permitted without license from IHS
Not for Resale

Table D.1 *(continued)*

Index	Time	Step input signal	Filtered output signal	
			Y_i	
5	0,033 333	1	0,004 146	0,004 891
24	0,160 000	1	0,067 884	0,078 788
25	0,166 667	1	0,072 823	0,084 448
26	0,173 333	1	0,077 882	0,090 237
27	0,180 000	1	0,083 056	**0,096 149**
28	0,186 667	1	0,088 339	**0,102 178**
29	0,193 333	1	0,093 728	0,108 318
30	0,200 000	1	**0,099 218**	0,114 564
31	0,206 667	1	**0,104 804**	0,120 911
32	0,213 333	1	0,110 482	0,127 352
33	0,220 000	1	0,116 248	0,133 884
34	0,226 667	1	0,122 097	0,140 500
35	0,233 333	1	0,128 025	0,147 197
36	0,240 000	1	0,134 029	0,153 969
37	0,246 667	1	0,140 104	0,160 811
174	1,160 000	1	0,859 856	0,896 087
175	1,166 667	1	0,862 443	**0,898 336**
176	1,173 333	1	0,864 994	**0,900 548**
177	1,180 000	1	0,867 510	0,902 723
178	1,186 667	1	0,869 990	0,904 863
179	1,193 333	1	0,872 436	0,906 967
180	1,200 000	1	0,874 846	0,909 036
181	1,206 667	1	0,877 223	0,911 071
182	1,213 333	1	0,879 565	0,913 072
183	1,220 000	1	0,881 874	0,915 038
184	1,226 667	1	0,884 149	0,916 972
185	1,233 333	1	0,886 392	0,918 872
186	1,240 000	1	0,888 601	0,920 740
187	1,246 667	1	0,890 779	0,922 575
188	1,253 333	1	0,892 924	0,924 379
189	1,260 000	1	0,895 037	0,926 151
190	1,266 667	1	0,897 120	0,927 893
191	1,273 333	1	**0,899 170**	0,929 603
192	1,280 000	1	**0,901 191**	0,931 284
193	1,286 667	1	0,903 180	0,932 934
194	1,293 333	1	0,905 140	0,934 556

In Table D.1, first iteration, the 10 % value occurs between index number 30 and 31 and the 90 % value occurs between index numbers 191 and 192. For the calculation of $t_{F,iter}$ the exact t_{10} and t_{90} values are determined by linear interpolation between the adjacent measuring points, as follows:

$$t_{10} = t_{lower} + \Delta t \times (0{,}1 - out_{lower})/(out_{upper} - out_{lower})$$

© ISO 2012 – All rights reserved

Copyright International Organization for Standardization
Provided by IHS under license with ISO
No reproduction or networking permitted without license from IHS
Not for Resale

$t_{90} = t_{lower} + \Delta t$ x (0,9 - out_{lower})/(out_{upper} - out_{lower})

where out_{upper} and out_{lower}, respectively, are the adjacent points of the Bessel filtered output signal, and t_{lower} is the time of the adjacent time point, as indicated in Table D.1.

t_{10} = 0,200 000 + 0,006 667 x (0,1 - 0,099 218)/(0,104 804 - 0,099 218) = 0,200 933 s

t_{90} =1,273 333 + 0,006 667 x (0,9 - 0,899 170)/(0,901 191 - 0,899 170) = 1,276 071 s

D.3.5 Step 4: filter response time of first iteration cycle $t_{F,iter}$

$t_{F,iter} = t_{90} - t_{10}$

$t_{F,iter}$ = 1,276 071 - 0,200 933 = 1,075 138 s

D.3.6 Step 5: deviation between required and obtained filter response time, Δ, of first iteration cycle

$\Delta = (t_{F,iter} - t_F)/t_F$

Δ = (1,075 138 - 0,987 421)/0,987 421 = 0,088 834

D.3.7 Step 6: checking the iteration criteria

$|\Delta|$ = 0,01 is required. Since 0,088 834 > 0,01, the iteration criteria are not met and a further iteration cycle must be started. For this iteration cycle, a new cut-off frequency is calculated from f_c and Δ as follows:

$f_{c,new} = f_c$ x (1 + Δ)

$f_{c,new}$ = 0,318 161 x (1 + 0,088 834) = 0,346 425 Hz

This new cut-off frequency is used in the second iteration cycle, starting again at Step 2. The iteration must be repeated until the iteration criteria are met. The resulting values of the first and second iteration are given in Table D.2.

Table D.2 — Values of the first and second iterations

Parameter	Unit	1st iteration	2nd iteration
f_c	Hz	0,318 161	0,346 425
E	1	7,080 29 × 10^{-5}	8,383 292 × 10^{-5}
K	1	0,970 781	0,968 199
t_{10}	s	0,200 933	0,184 259
t_{90}	s	1,276 071	1,178 348
$t_{F,iter}$	s	1,075 138	0,994 090
Δ	1	0,088 834	0,006 754
$f_{c,new}$	Hz	0,346 425	0,348 765

© ISO 2012 – All rights reserved
Copyright International Organization for Standardization
Provided by IHS under license with ISO
No reproduction or networking permitted without license from IHS
Not for Resale

D.3.8 Step 7: final Bessel algorithm

As soon as the iteration criteria have been met, the final Bessel filter constants and the final Bessel algorithm are calculated in accordance with Step 2. In this example, the iteration criterion has been met after the second iteration ($\Delta = 0{,}006\ 754 < 0{,}01$). The final algorithm is then used for determining the averaged smoke values (see D.4).

$$Y_i = Y_{i-1} + E \times (S_i + 2 \times S_{i-1} + S_{i-2} - 4 \times Y_{i-2}) + K \times (Y_{i-1} - Y_{i-2})$$

$$Y_i = Y_{i-1} + 8{,}383\ 292 \times 10^{-5} \times (S_i + 2 \times S_{i-1} + S_{i-2} - 4 \times Y_{i-2}) + 0{,}968\ 199 \times (Y_{i-1} - Y_{i-2})$$

D.4 Calculation of the smoke values

D.4.1 General

In the following example, the general procedure of determining the final smoke value is given for PSV in accordance with 10.2.3. In this case, the Bessel filter designated in D.3 is used, and is applied to the light absorption coefficient, k, converted from the raw opacity signal according to Formula (10) of 10.1.2. If opacity is used for reporting the test results, the same filter algorithm is directly applied to the raw opacity signal. The procedure for LSV is identical.

In Figure D.3 are shown the traces of the measured raw opacity signal, and of the unfiltered and filtered light absorption coefficients, k, of an acceleration. The maximum value $Y_{i,\max}$ (peak) of the filtered k trace is also indicated. Correspondingly, Tables D.3 and D.4 list the numerical values of index i, time (sampling rate of 150 Hz), raw opacity, unfiltered k and filtered k. Filtering was conducted using the constants of the Bessel algorithm designated in D.3. Due to the large amount of data, only those sections of the smoke trace around the beginning and the peak are tabled.

--`,,```,,,,````-`-`,,`,,`,`,,`---

© ISO 2012 – All rights reserved

Copyright International Organization for Standardization
Provided by IHS under license with ISO
No reproduction or networking permitted without license from IHS
Not for Resale

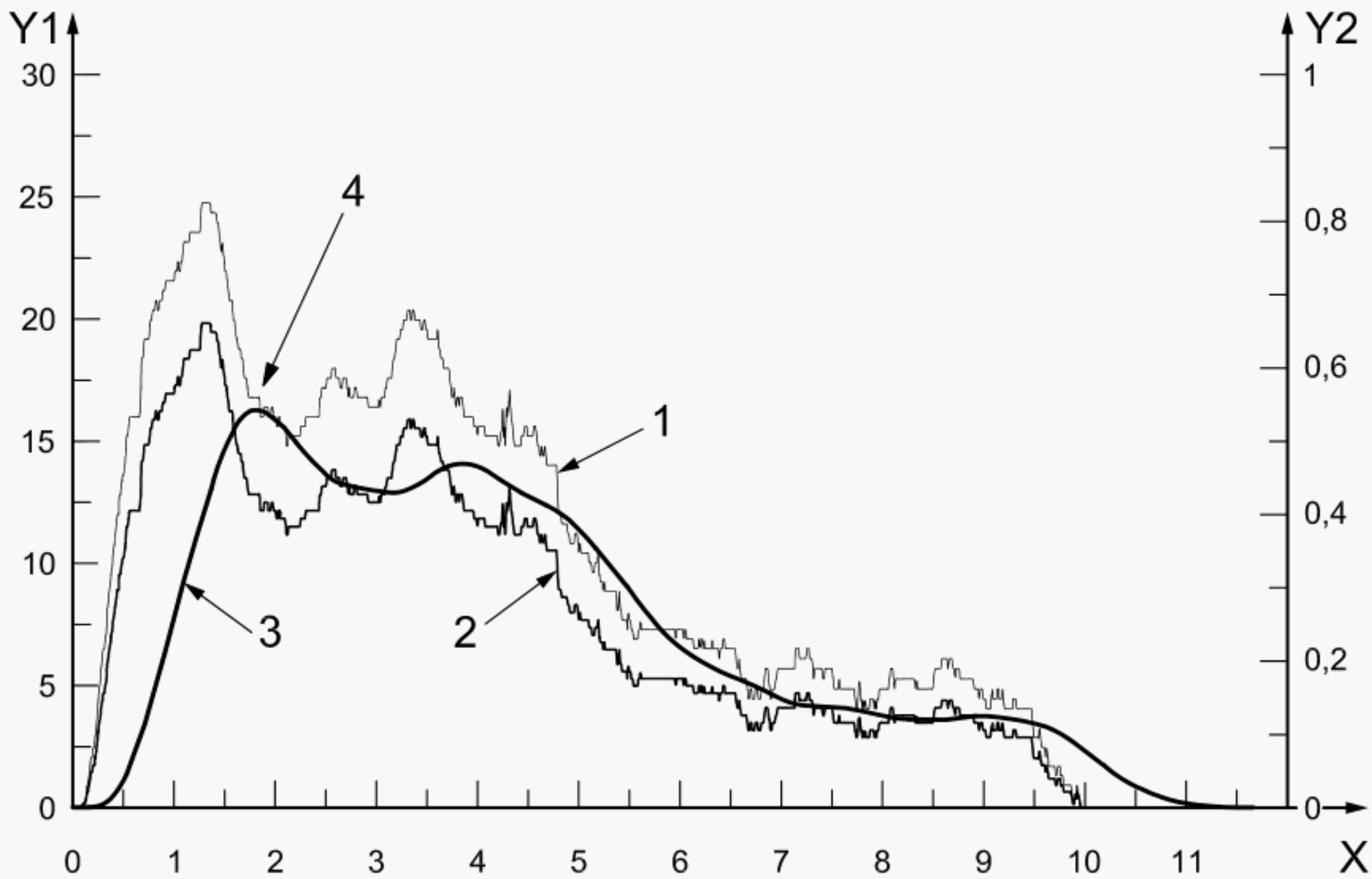

Key

Y1 opacity, N, %

Y2 light Absorption Coefficient, 1/m

X time, s

1 raw opacity, N

2 unfiltered smoke, k

3 filtered smoke, k

Figure D.3 — Traces of measured opacity N, of k for unfiltered smoke and of k for filtered smoke

Table D.3 — Values of opacity, N, and of unfiltered and filtered k at beginning of load step

Index i	Time s	Opacity N %	Unfiltered k-value m^{-1}	Filtered k-value m^{-1}
-2	0,000 000	0,000 000	0,000 000	0,000 000
-1	0,000 000	0,000 000	0,000 000	0,000 000
0	0,000 000	0,000 000	0,000 000	0,000 000
1	0,006 667	0,020 000	0,000 465	0,000 000
2	0,013 333	0,020 000	0,000 465	0,000 000
3	0,020 000	0,020 000	0,000 465	0,000 000
4	0,026 667	0,020 000	0,000 465	0,000 001
5	0,033 333	0,020 000	0,000 465	0,000 002
6	0,040 000	0,020 000	0,000 465	0,000 002
7	0,046 667	0,020 000	0,000 465	0,000 003
8	0,053 333	0,020 000	0,000 465	0,000 004
9	0,060 000	0,020 000	0,000 465	0,000 005

Copyright International Organization for Standardization
Provided by IHS under license with ISO
No reproduction or networking permitted without license from IHS
Not for Resale
© ISO 2012 – All rights reserved

Table D.3 *(continued)*

Index i	Time s	Opacity N %	Unfiltered k-value m^{-1}	Filtered k-value m^{-1}
10	0,066 667	0,020 000	0,000 465	0,000 006
11	0,073 333	0,020 000	0,000 465	0,000 008
12	0,080 000	0,020 000	0,000 465	0,000 009
13	0,086 667	0,020 000	0,000 465	0,000 011
14	0,093 333	0,020 000	0,000 465	0,000 013
15	0,100 000	0,192 000	0,004 469	0,000 015
16	0,106 667	0,212 000	0,004 935	0,000 018
17	0,113 333	0,212 000	0,004 935	0,000 023
18	0,120 000	0,212 000	0,004 935	0,000 029
19	0,126 667	0,343 000	0,007 990	0,000 037
20	0,133 333	0,566 000	0,013 200	0,000 047
21	0,140 000	0,889 000	0,020 767	0,000 062
22	0,146 667	0,929 000	0,021 706	0,000 083
23	0,153 333	0,929 000	0,021 706	0,000 110
24	0,160 000	1,263 000	0,029 559	0,000 144
25	0,166 667	1,455 000	0,034 086	0,000 187
26	0,173 333	1,697 000	0,039 804	0,000 240
27	0,180 000	2,030 000	0,047 695	0,000 305
28	0,186 667	2,081 000	0,048 906	0,000 383
29	0,193 333	2,081 000	0,048 906	0,000 475
30	0,200 000	2,424 000	0,057 067	0,000 580
31	0,206 667	2,475 000	0,058 282	0,000 701
32	0,213 333	2,475 000	0,058 282	0,000 837
33	0,220 000	2,808 000	0,066 237	0,000 989
34	0,226 667	3,010 000	0,071 075	0,001 158
35	0,233 333	3,253 000	0,076 909	0,001 345
36	0,240 000	3,606 000	0,085 410	0,001 551
37	0,246 667	3,960 000	0,093 966	0,001 780
38	0,253 333	4,455 000	0,105 983	0,002 032
39	0,260 000	4,818 000	0,114 836	0,002 311
40	0,266 667	5,020 000	0,119 776	0,002 618

Table D.4 — Values of opacity, N, and of unfiltered and filtered k around PSV

Index i	Time s	Opacity N %	Unfiltered k-value m^{-1}	Filtered k-value m^{-1}
259	1,726 667	17,182 000	0,438 429	0,538 748
260	1,733 333	16,949 000	0,431 896	0,539 244
261	1,740 000	16,788 000	0,427 392	0,539 689
262	1,746 667	16,798 000	0,427 671	0,540 082
263	1,753 333	16,788 000	0,427 392	0,540 426

© ISO 2012 – All rights reserved
Copyright International Organization for Standardization
Provided by IHS under license with ISO
No reproduction or networking permitted without license from IHS
Not for Resale

Table D.4 *(continued)*

Index i	**Time** s	**Opacity** N %	**Unfiltered** k**-value** m^{-1}	**Filtered** k**-value** m^{-1}
264	1,760 000	16,798 000	0,427 671	0,540 720
265	1,766 667	16,798 000	0,427 671	0,540 968
266	1,773 333	16,788 000	0,427 392	0,541 170
267	1,780 000	16,788 000	0,427 392	0,541 327
268	1,786 667	16,798 000	0,427 671	0,541 441
269	1,793 333	16,798 000	0,427 671	0,541 514
270	1,800 000	16,793 000	0,427 532	**0,541 545** [a]
271	1,806 667	16,788 000	0,427 392	0,541 538
272	1,813 333	16,783 000	0,427 252	0,541 493
273	1,820 000	16,780 000	0,427 168	0,541 411
274	1,826 667	16,798 000	0,427 671	0,541 293
275	1,833 333	16,778 000	0,427 112	0,541 140
276	1,840 000	16,808 000	0,427 951	0,540 954
277	1,846 667	16,768 000	0,426 833	0,540 737
278	1,853 333	16,010 000	0,405 750	0,540 486
279	1,860 000	16,010 000	0,405 750	0,540 199
280	1,866 667	16,000 000	0,405 473	0,539 877
281	1,873 333	16,010 000	0,405 750	0,539 519
282	1,880 000	16,000 000	0,405 473	0,539 128
283	1,886 667	16,010 000	0,405 750	0,538 704
284	1,893 333	16,394 000	0,416 406	0,538 251
285	1,900 000	16,394 000	0,416 406	0,537 769
286	1,906 667	16,404 000	0,416 685	0,537 262
287	1,913 333	16,394 000	0,416 406	0,536 731
288	1,920 000	16,394 000	0,416 406	0,536 176
289	1,926 667	16,384 000	0,416 128	0,535 598
290	1,933 333	16,010 000	0,405 750	0,534 997
291	1,940 000	16,010 000	0,405 750	0,534 373
292	1,946 667	16,000 000	0,405 473	0,533 726
293	1,953 333	16,010 000	0,405 750	0,533 055
294	1,960 000	16,212 000	0,411 349	0,532 364
295	1,966 667	16,394 000	0,416 406	0,531 654
296	1,973 333	16,394 000	0,416 406	0,530 927
297	1,980 000	16,192 000	0,410 794	0,530 184
298	1,986 667	16,000 000	0,405 473	0,529 424
299	1,993 333	16,000 000	0,405 473	0,528 648
300	2,000 000	16,000 000	0,405 473	0,527 854

[a] Boldface indicates peak value.

D.4.2 Calculation of the unfiltered k-value (optional)

The calculation procedure starts with the conversion from the as-measured opacity values to light absorption coefficient values. As indicated above, this is only required if the final smoke values are to be reported in

© ISO 2012 – All rights reserved
Copyright International Organization for Standardization
Provided by IHS under license with ISO
No reproduction or networking permitted without license from IHS
Not for Resale

units of light absorption coefficient or if ambient correction is to be applied in accordance with 10.3.2. In this example, the conversion is done for index 262 (opacity N = 16,798 %) and an optical path length, L_A, of 0,43 m.

$$k = -\frac{1}{L_A} \times \ln\left(1 - \frac{N}{100}\right)$$

$$k = -\frac{1}{0{,}43} \times \ln\left(1 - \frac{16{,}798}{100}\right) = 0{,}427\ 671\ \text{m}^{-1}$$

This value corresponds to S_{262} given in D.4.3.

D.4.3 Calculation of Bessel averaged smoke (filtered k-value)

For starting the Bessel algorithm, S_{i-1}, S_{i-2}, Y_{i-1} and Y_{i-2} are set to zero. After the start, all individual smoke values are calculated (filtered) in the same way as described for index i = 262 resulting in the listing of filtered *k*-values of Table D.4. The following data are an excerpt of Table D.4 for index 262:

S_{262} = 0,427 671 m^{-1}

S_{261} = 0,427 392 m^{-1}

S_{260} = 0,431 896 m^{-1}

Y_{261} = 0,539 689 m^{-1}

Y_{260} = 0,539 244 m^{-1}

In Formula (15), the Bessel constants of D.3 are used. The actual unfiltered k-value corresponds to S_{262} (S_i) as calculated above. S_{261} (S_{i-1}) and S_{260} (S_{i-2}) are the two preceeding unfiltered k-values, Y_{261} (Y_{i-1}) and Y260 (Y_{i-2}) are the two preceeding filtered k-values.

$$Y_i = Y_{i-1} + E \times (S_i + 2 \times S_{i-1} + S_{i-2} - 4 \times Y_{i-2}) + K \times (Y_{i-1} - Y_{i-2})$$

$$Y_{262} = 0{,}539\ 689 + 8{,}383\ 292 \times 10^{-5} \times (0{,}427\ 671 + 2 \times 0{,}427\ 392 + 0{,}431\ 896 - 4 \times 0{,}539\ 244) +$$

$$0{,}968\ 199 \times (0{,}539\ 689 - 0{,}539\ 244)$$

$$= 0{,}540\ 082\ \text{m}^{-1}$$

The highest filtered k-value of the complete smoke trace corresponds to PSV (PSV_F or PSV_3 or PSV_6 or PSV_9 depending on acceleration). In this example, the maximum is 0,541 545 m^{-1} found at index 270.

LSV is calculated accordingly.

As indicated above, the Bessel algorithm can be directly applied to the opacity N without conversion to k-value if the final values are to be reported in units of opacity. Another possibility is the re-conversion of the k-value, as calculated above, to opacity.

© ISO 2012 – All rights reserved

Copyright International Organization for Standardization
Provided by IHS under license with ISO
No reproduction or networking permitted without license from IHS
Not for Resale

Annex E
(normative)

Test cycle for marine propulsion engines

E.1 General

Marine engine operations occurs over a much more limited combination of speed and torque as compared to on-road and mobile off-road engines. This is partly due to the fact that marine engines are not equipped with a shiftable gearbox and partly to the physical behaviour of the power transmission from the propeller to the water.

There are two principle torque-to-speed relationships: the propeller law, defined by torque $= f(n^2)$, where n is the number of revolutions of the crankshaft in a given period of time, with a fixed propeller or water jet, and the constant-speed law (comparable to generator applications), which is applicable with a controllable-pitch propeller. These principles correspond with the E1, E2, E3 and E5 test cycles of ISO 8178-4:2007. Therefore, the smoke during the engine load increase, for both cases (with or without speed increase), is more stable and influenced mainly by the rate of load increase. This rate is subjected to automatic limitation procedures of various kinds.

One example is the power-increase rate. For marine engines, the power-increase rate is slower as compared to on-road or mobile off-road engines. This is partly due to the physical behaviour of the power transmission from the propeller to the water. In all such cases, the engine will be controlled by its management or control system depending on the kind of the vessel. This “standard case” is also the worst case, and is very suitable as basis for dynamic smoke measurements. Engines with various management or control settings can be combined in engine families or groups, with a worst case being tested for the complete family or group.

On board vessels, safety is always of paramount importance. Therefore, although automatic control is the general rule, an exception shall remain for emergency cases where overriding of the system is needed to reduce imminent danger. In such an emergency case, there might be an increased smoke rate due to greater engine acceleration. Such increased smoke rates are not considered in this annex.

E.2 Application of the smoke-test cycle

The smoke-test cycle described in this annex is applicable to those engines which are included in the E1, E2, E3 and E5 cycles of ISO 8178-4:2007. The factor governing whether to use the test cycle in this annex is the loaded acceleration time. This should be 20 s ± 5 s or be as declared by the manufacturer, taking into account the engine management or control system. Those marine propulsion engines that can be used in the application for mobile off-road engines may optionally be tested according the procedures in Annex A.

The following are typical applications:

— E1: diesel engines for craft less than 24 m long (derived from test cycle B);

— E2: constant-speed, heavy-duty engines for vessel propulsion without limitation in length;

— E3: propeller-law, heavy-duty engines for vessel propulsion without limitation in length;

— E5: diesel engines for craft less than 24 m long (propeller law).

This annex has been confirmed for engines with rated power of up to 1 500 kW.

E.3 Terms and definitions

© ISO 2012 – All rights reserved
Copyright International Organization for Standardization
Provided by IHS under license with ISO
No reproduction or networking permitted without license from IHS
Not for Resale

E.3.1
test under transient load
⟨variable-speed engines⟩ that portion of the procedure which consists of running the engine through a clearly defined cycle consisting of an acceleration mode under load, and a mode at 80 % of rated speed under load

E.3.2
test under transient load
⟨constant-speed engines⟩ that portion of the procedure which consists of running the engine at rated speed through a clearly defined cycle consisting of a load-increase mode and a mode at 50 % of rated power

E.3.3
load-increase time
⟨variable-speed engines⟩ time an engine requires to accelerate from low-idle speed to 80 % of rated speed, during which acceleration, the engine load is controlled so the engine torque corresponds to the transient load curve

E.3.4
load-increase time
⟨constant-speed engines⟩ time an engine requires at rated speed to increase the load from no-load to 50 % of rated power

E.3.5
transient-load curve
⟨variable-speed engines⟩ propeller curve, defined by the $= f\,(n^2)$, at the end point of which the rated power is reached at the rated speed

NOTE The variable n is the number of revolutions of the crankshaft in a given period of time.

E.3.6
transient-load curve
⟨constant-speed engines⟩ constant-speed curve at rated speed, at the end point of which the rated power is reached

E.3.7
peak smoke value
PSV
average of the three highest 1,0 s Bessel-averaged smoke values obtained during the test under transient load

E.4 Test cycle

E.4.1 General

During smoke measurement in the test under transient load (described in detail in E.4.2 and E.4.3), the engine load is increased as rapidly as possible, either on the propeller curve or at constant speed. The load-increase rate, and thus the load-increase time, is controlled by the engine management or control system.

This cycle is suitable for use on the test stand as well as for measurements with the engine installed in the vessel.

When engine smoke is measured on the test stand, the load-increase time can be varied within a range that covers the service conditions of an engine family or engine group, which shall be defined in accordance with ISO 8178-7 and ISO 8178-8.

E.4.2 Preconditioning of the engine

The engine shall be warmed up at rated power in accordance with the manufacturer's recommendations in order to stabilize the engine operating parameters.

NOTE This preconditioning phase also insulates the current measurement against the influence of a previous test and is considered as creating reference conditions.

© ISO 2012 – All rights reserved

Copyright International Organization for Standardization
Provided by IHS under license with ISO
No reproduction or networking permitted without license from IHS
Not for Resale

E.4.3 Conducting a test under transient load

E.4.3.1 General

The test under transient load shall be performed immediately following the preconditioning, as described in E.4.2. Conducting a test under transient load begins with a conditioning cycle to improve repeatability of the results. The conditioning cycle is followed by three load-increase cycles. The loaded transient test sequence is described in E.4.3.4 and E.4.3.5.

E.4.3.2 Variable-speed engines

The test under transient load consists of accelerating the engine from low-idle speed to 80 % of rated speed against the load that is described by the function torque $= f(n^2)$. The sequence is shown graphically in Figure E.1.

E.4.3.3 Constant-speed engines

The test under transient load consists of increasing the engine load at rated speed from the lowest possible stabilized load to 50 % of the rated speed. The sequence is shown graphically in Figure E.2.

E.4.3.4 Test sequence for variable-speed engines

E.4.3.4.1 Conditioning cycle

The conditioning cycle is carried out as follows.

a) The engine shall be operated at the lowest possible stabilized load with the load/speed control lever in the lowest possible position at low-idle speed for 40 s ± 5 s.

b) From the low-idle speed, the load/speed control lever shall be moved

   1) to an open position allowing the engine to reach 80 % of its rated speed in 20 s ± 5 s, or

   2) rapidly to, and held at, the fully-open position. The engine shall accelerate against the load on the transient load curve to 80 % of its rated speed in the time permitted by the engine management or control system.

c) 80 % of rated speed and the given load as specified in the transient load curve shall be maintained for 60 s ± 5 s.

d) The load shall be reduced and the load/speed control lever shall be returned to the low-idle position.

E.4.3.4.2 Measurement cycle

Repeat steps E.4.3.4.1 a) through d) until three consistent, consecutive results are obtained.

E.4.3.5 Test sequence for constant-speed engines

E.4.3.5.1 Conditioning cycle

The conditioning cycle is carried out as follows.

a) The engine shall be operated at the lowest possible stabilized load at rated speed for 40 s ± 5 s.

b) At rated speed, the load/speed control lever shall be moved

   — to an open position allowing the engine to reach 50 % of its rated load in 20 s ± 5 s;

   — rapidly to the 50 % position and held at this position. The engine load shall increase at constant engine speed to 50 % of its rated load in the time permitted by the engine management or control system.

c) 50 % of rated power at rated speed shall be maintained for 60 s ± 5 s.

© ISO 2012 – All rights reserved
Copyright International Organization for Standardization
Provided by IHS under license with ISO
No reproduction or networking permitted without license from IHS
Not for Resale

d) The load shall be reduced and the load control lever shall be returned to the lowest possible stabilized load position at rated speed.

E.4.3.5.2 Measurement cycle

Repeat steps E.4.3.5.1 a) through d) until three consistent, consecutive results are obtained.

E.4.3.6 Test validation criteria — Test under transient load

The acceleration test results under load shall be considered valid only after the following test cycle criteria are met:

The arithmetic difference between the highest and the lowest maximum 1,0 s Bessel-averaged smoke values from the three successive acceleration tests under load shall not exceed 5,0 % opacity.

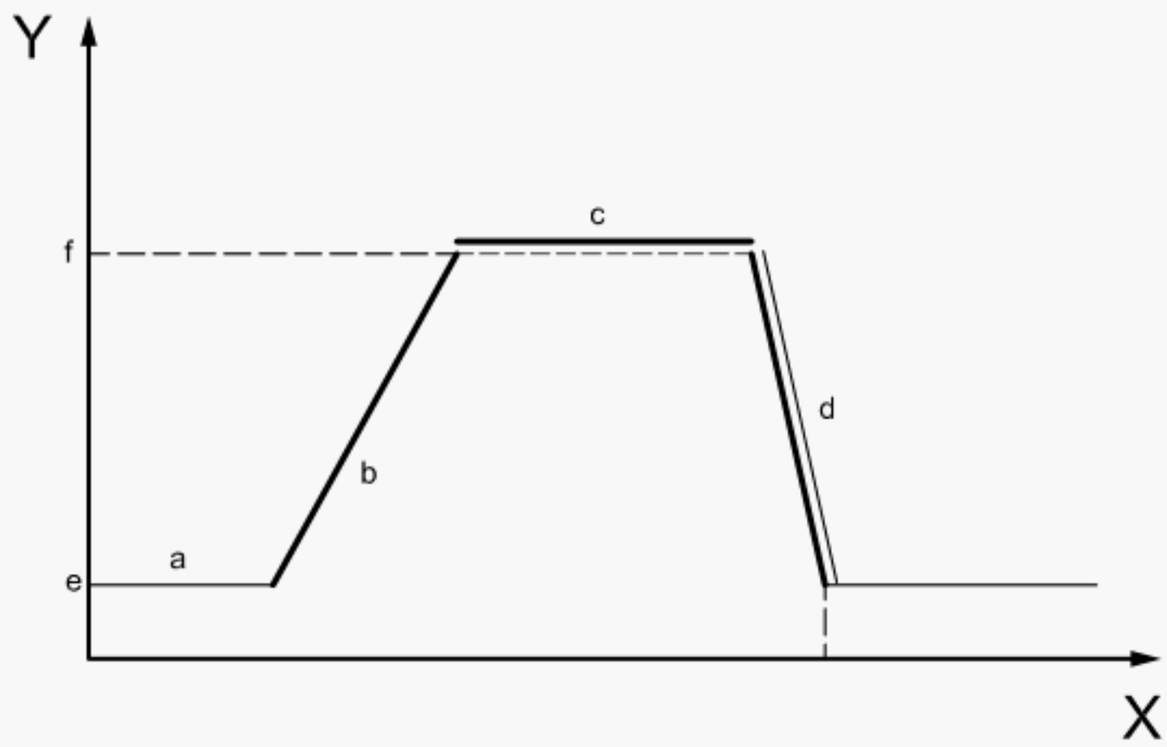

Key

Y engine speed

X time, s

Time lapses [a] to [d] refer to the list items in E.4.3.4.1.

NOTE Depending on engine specifications, deviations from a linear ramp are possible in accordance with E.4.1

[a] "Control lever" in no-load position; 40 s ± 5 s.

[b] Time, 20 s ± 5 s or as declared by engine manufacturer:

1) "control lever" in open position

2) "control lever" in fully open position.

[c] Maintained speed; 60 s ± 5 s.

[d] "Control lever" returned to idling position; time declared by engine manufacturer.

[e] Idle.

[f] 80 % rated.

Figure E.1 — Testing under transient load — Variable speed engines

--`,,```,,,,```-`-`,,`,,`,`,,`---

© ISO 2012 – All rights reserved

Copyright International Organization for Standardization
Provided by IHS under license with ISO
No reproduction or networking permitted without license from IHS
Not for Resale

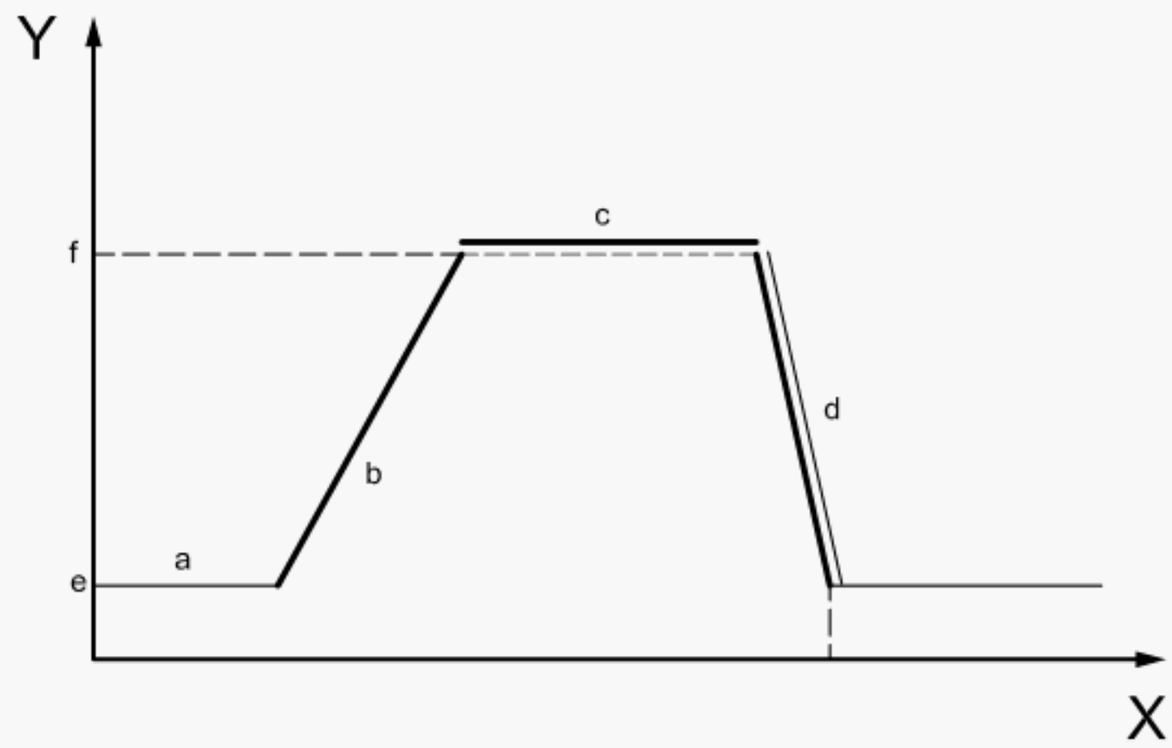

Key

Y engine power

X time, s

Time lapses [a] to [d] refer to the list items in E.4.3.5.1.

NOTE Depending on engine specifications, deviations from a linear ramp are possible in accordance with E.4.1.

[a] "Control lever" in no-load position; 40 s ± 5 s.

[b] Time, 20 s ± 5 s or as declared by engine manufacturer:

1) "control lever" in open position

2) "control lever" in fully open position.

[c] Maintained speed; 60 s ± 5 s.

[d] "Control lever" returned to no load position; time declared by engine manufacturer.

[e] 0 %.

[f] 50 % rated.

Figure E.2 — Loaded acceleration test — Constant speed engines

E.5 Analysis of results

E.5.1 General

Subclause D.5 describes how to analyse the results of the test under transient load. Many opacimeters used for this test have a smoke output signal corresponding to $X = 0{,}5$ s Bessel-averaged smoke value according to the algorithm described in 10.2. For these opacimeters, further signal conditioning is needed to produce results equivalent to the formula in which $X = 1{,}0$ s, and where the value for $(t_p^2 + t_e^2)$ in 10.2.2, Formula (11), is $0{,}5^2$. Analysis of the raw smoke results, e.g. those not already processed according to the 0,5 s Bessel algorithm, shall use a value for $(t_p^2 + t_e^2)$ which represents the opacimeter system used.

E.5.2 Peak smoke value (PSV)

Determine the highest 1,0 s Bessel-averaged smoke value among the three repetitions mentioned in E.4.3. Care should be taken to ensure that the smoke data which are analysed correspond to the time during which the load increase occurs (10.1.1). PSV is the average of the three highest 1,0 s Bessel-averaged smoke values obtained during load increase.

The methodology for calculating Bessel-averaged numbers can be found in 10.2. For peak smoke values, the value of X in Formula (11) is 1,0 s.

© ISO 2012 – All rights reserved
Copyright International Organization for Standardization
Provided by IHS under license with ISO
No reproduction or networking permitted without license from IHS
Not for Resale

E.6 Reported results

The following smoke values shall be reported: PSV_1, PSV_2, PSV_3, plus PSV_a (the average of PSV_1, PSV_2 and PSV_3). The duration for the three tests (during the load increases) shall also be reported.

© ISO 2012 – All rights reserved
Copyright International Organization for Standardization
Provided by IHS under license with ISO
No reproduction or networking permitted without license from IHS
Not for Resale

Annex F
(normative)

Test cycle for variable speed engines type F (rail traction)

F.1 General

An acceleration test against the engine's inertial moment (no-load) is not relevant for rail-traction engines, because, to avoid locomotive wheel slip, the throttle response of rail-traction engines is not as rapid as that of off-road (C1) engines. When the engine is accelerating, the throttle of rail-traction engines is not opened quickly but on a time-based load-increase rate. Engines with differing settings for the engine management or control system can be combined into engine families or groups for which the worst case, representative of the complete family or group, is tested.

The test will normally be carried out with the engine on a test bench with all static equipment and measurement instruments. In some cases, it is possible to absorb the produced power in a static test bench installation (e.g. load-bank system) without dismantling the engine from the locomotive.

F.2 Application of the test cycle

This annex has been confirmed for engines with rated power up to 1 500 kW.

F.3 Terms and definitions

F.3.1
test under transient load
that portion of the procedure which consists of running the engine through a clearly defined cycle consisting of an acceleration mode under load, and a rated-speed, full-load mode

F.3.2
acceleration time under load
time an engine requires to accelerate from idle speed to the rated speed; during acceleration, the engine load is controlled so the engine power lies on the acceleration load curve

NOTE The acceleration time under load is controlled by the engine management or control system.

F.3.3
acceleration load curve
transient load curve chosen for this test, representative of the natural load curve of hydraulic dynamometers, which is approximately of the form torque $= f(n^2)$ which in turn represents actual load curves in service

NOTE In cases where the test is carried out with a generator, the relationship torque $= f(n^2)$, where n is the number of revolutions of the crankshaft in a given period of time, is used.

F.3.4
peak smoke value
PSV
average of the three highest 1,0 s Bessel-averaged smoke values obtained during the acceleration modes of the tests under transient load

© ISO 2012 – All rights reserved
Copyright International Organization for Standardization
Provided by IHS under license with ISO
No reproduction or networking permitted without license from IHS
Not for Resale

F.4 Test cycle

F.4.1 General

The engine shall be tested with the management or control system that is to be used in service.

F.4.2 Preconditioning of the engine

The engine shall be warmed up at rated power in accordance with the recommendations of the manufacturer to stabilize the engine operating parameters.

NOTE This preconditioning phase insulates the present measurement against the influence of a previous test and is considered as creating reference conditions.

F.4.3 Test under transient load

F.4.3.1 General

The test under transient load shall be performed immediately following the preconditioning described in F.4.2. The test under transient load is a procedure that accelerates the engine from low-idle speed against the load. The end of this load curve at rated speed shall be the rated power of the engine.

F.4.3.2 Acceleration time under transient loading

The acceleration time during this test shall be controlled by the engine management or control system and is oriented to the engine operating conditions in rail-traction service. Since the smoke emission of an engine under transient loading increases with decreasing acceleration time, the acceptance of engines with differing acceleration times within an engine family or group is facilitated by testing the engine which has the shortest acceleration time as reference engine.

F.4.3.3 Conducting a test under transient load

F.4.3.3.1 General

The test under transient load begins with a conditioning cycle to improve the repeatability of the results. The conditioning cycle is followed by three acceleration cycles under transient load. The loaded acceleration is followed by full-load speed stabilization. The sequence is given in F.4.3.3.2 and F.4.3.3.3.

F.4.3.3.2 Conditioning cycle

The conditioning cycle is carried out as follows.

a) The engine shall be operated at the lowest possible stabilized external load with the speed control lever in the lowest possible position (low-idle speed) for 40 s ± 5 s.

b) From idle speed, the load/speed control lever shall be moved rapidly to the full-load/speed control position to accelerate the engine against a load that will allow the engine to reach 95 % of its rated speed in a time which is permitted by the engine management or control system.

c) Within 20 s of the engine reaching 95 % of rated speed, the necessary dynamometer load shall be applied to stabilize the engine at its full-rated speed/load.

NOTE During the stabilizing time an overshoot might occur.

d) Rated speed and full-load shall be maintained for 60 s ± 5 s.

e) The load shall be reduced and the load/speed control lever shall be returned to the idle position.

© ISO 2012 – All rights reserved

Copyright International Organization for Standardization
Provided by IHS under license with ISO
No reproduction or networking permitted without license from IHS
Not for Resale

F.4.3.3.3 Measurement cycle

Repeat steps F.4.3.3.2 a) to e) until three consistent, consecutive results are obtained.

F.4.3.4 Test validation criteria — Test under transient load

The acceleration tests results under load shall be considered valid only after the following test cycle criteria are met:

The arithmetic difference between the highest and lowest maximum 1,0 s Bessel-averaged smoke values from the three successive acceleration tests under load shall not exceed 5,0 % opacity.

Additional test validation criteria are given in 5.1.2 and 7.3.2.3.

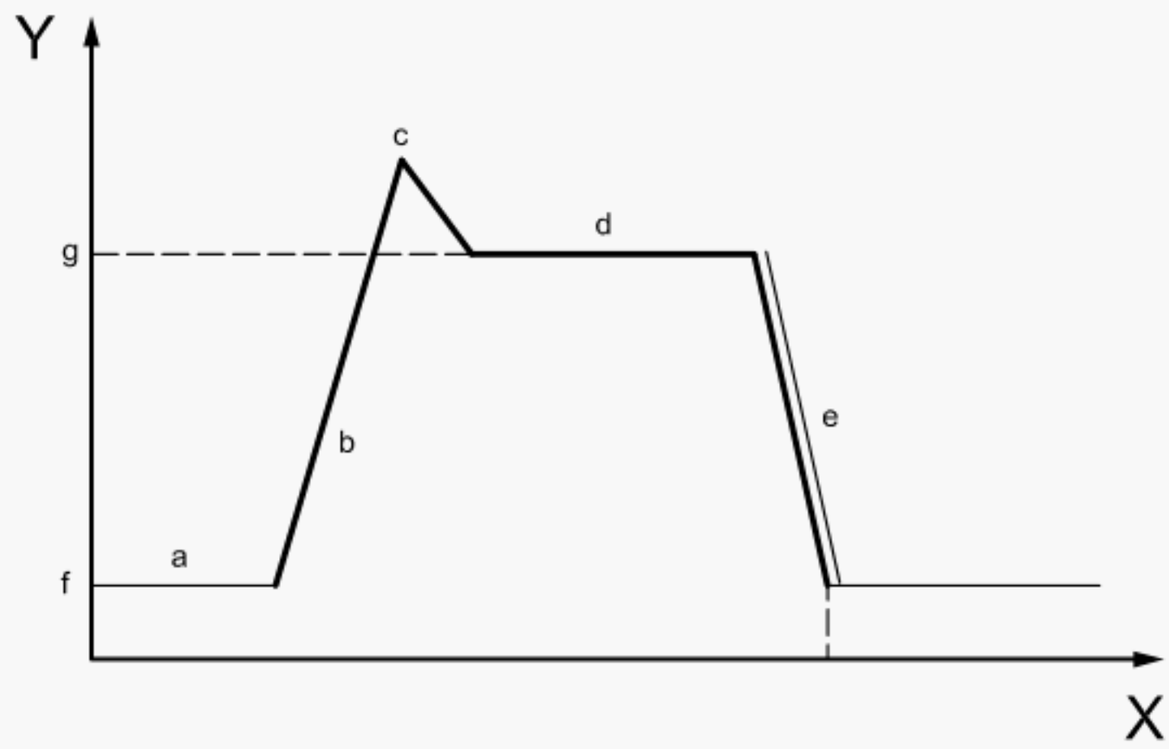

Key

Y engine speed

X time, s

Time lapses [a] to [d] refer to the list items in F.4.3.3.2.

[a] "Control lever" in idling position; 40 s ± 5 s.

[b] "Control lever" in fully open position; time declared by engine manufacturer.

[c] "Control lever" in fully open position, 20 s.

[d] "Control lever" in fully open position; 60 s ± 5 s.

[e] "Control lever" returned to idling position.

[f] Idle.

[g] Rated.

Figure F.1 — Loaded acceleration test

F.5 Analysis of results

F.5.1 General

Subclause D.5 describes how to analyse the results of the test under transient load. Many opacimeters used for this test have a smoke output signal corresponding to $X = 0{,}5$ s Bessel-averaged smoke value according to the algorithm described in 10.2. For these opacimeters, further signal conditioning is needed to produce results equivalent to the formula in which $X = 1{,}0$ s, and where the value for $(t_p^2 + t_e^2)$ used in 10.2.2, Formula (11), is $0{,}5^2$. Analysis of raw smoke results, those not already processed in accordance with the 0,5 s Bessel algorithm, should use a value for $(t_p^2 + t_e^2)$ which represents the opacimeter system used.

© ISO 2012 – All rights reserved
Copyright International Organization for Standardization
Provided by IHS under license with ISO
No reproduction or networking permitted without license from IHS
Not for Resale

F.5.2 Peak smoke value (PSV)

Determine the highest 1,0 s Bessel-averaged smoke values which occurs among the three repetitions of F.4.3.3.2 b). Care should be taken to ensure that the smoke data that are analysed correspond to the time during which the acceleration event occurs (see 10.1.1). PSV is the average of the three highest 1,0 s Bessel-averaged smoke values obtained during acceleration under load.

The methodology for calculating Bessel-averaged numbers can be found in 10.2. For PSV_s, the value of X in Formula (11) is 1,0 s.

F.6 Reported results

The following smoke values shall be reported: PSV_1, PSV_2, PSV_3, plus PSV_a, the average of those three. The duration for the three tests (during the load increases) shall also be reported.

© ISO 2012 – All rights reserved
Copyright International Organization for Standardization
Provided by IHS under license with ISO
No reproduction or networking permitted without license from IHS
Not for Resale

Bibliography

[1] ISO 3046-1:1995, *Reciprocating internal combustion engines — Performance — Part 1: Standard reference conditions, declarations of power, fuel and lubricating oil consumptions and test methods*

[2] ISO 3046-3, *Reciprocating internal combustion engines — Performance — Part 3: Test measurements*

[3] ISO 8178-1, *Reciprocating internal combustion engines — Exhaust emission measurement — Part 1: Test-bed measurement of gaseous and particulate exhaust emissions*

[4] SAE J1667, *Snap-Acceleration Smoke Test Procedure for Heavy-Duty Diesel Powered Vehicles*

[5] ECE Regulation No. 24, *Uniform provisions concerning the approval of compression-ignition (C.I.) engines with regard to the emission of visible pollutants*

[6] Council Directive 72/306/EEC, *On the approximation of the laws of the Member States relating to the measures to be taken against the emission of pollutants from diesel engines for use in vehicles*

[7] Council Directive 77/537/EEC, *On the approximation of the laws of the Member States relating to the measures to be taken against the emission of pollutants from diesel engines for use in wheeled agricultural or forestry tractors*

© ISO 2012 – All rights reserved

Copyright International Organization for Standardization
Provided by IHS under license with ISO
No reproduction or networking permitted without license from IHS
Not for Resale

Copyright International Organization for Standardization
Provided by IHS under license with ISO
No reproduction or networking permitted without license from IHS
Not for Resale

ICS 13.040.50; 27.020.00

Price based on 52 pages

--`,,```,,,,````-`-`,,`,,`,`,,`---

© ISO 2012 – All rights reserved

Copyright International Organization for Standardization
Provided by IHS under license with ISO
No reproduction or networking permitted without license from IHS

Not for Resale