INTERNATIONAL STANDARD

ISO 8096

First edition
2005-02-15

Rubber- or plastics-coated fabrics for water-resistant clothing — Specification

Supports textiles revêtus de caoutchouc ou de plastique pour vêtements imperméables à l'eau — Spécifications

Reference number
ISO 8096:2005(E)

© ISO 2005

Copyright International Organization for Standardization
Provided by IHS under license with ISO
No reproduction or networking permitted without license from IHS

Licensee=IHS Employees/1111111001, User=Wing, Bernie
Not for Resale, 05/08/2007 07:44:28 MDT

PDF disclaimer

This PDF file may contain embedded typefaces. In accordance with Adobe's licensing policy, this file may be printed or viewed but shall not be edited unless the typefaces which are embedded are licensed to and installed on the computer performing the editing. In downloading this file, parties accept therein the responsibility of not infringing Adobe's licensing policy. The ISO Central Secretariat accepts no liability in this area.

Adobe is a trademark of Adobe Systems Incorporated.

Details of the software products used to create this PDF file can be found in the General Info relative to the file; the PDF-creation parameters were optimized for printing. Every care has been taken to ensure that the file is suitable for use by ISO member bodies. In the unlikely event that a problem relating to it is found, please inform the Central Secretariat at the address given below.

© ISO 2005

All rights reserved. Unless otherwise specified, no part of this publication may be reproduced or utilized in any form or by any means, electronic or mechanical, including photocopying and microfilm, without permission in writing from either ISO at the address below or ISO's member body in the country of the requester.

ISO copyright office
Case postale 56 • CH-1211 Geneva 20
Tel. + 41 22 749 01 11
Fax + 41 22 749 09 47
E-mail copyright@iso.org
Web www.iso.org

Published in Switzerland

Copyright International Organization for Standardization
Provided by IHS under license with ISO
No reproduction or networking permitted without license from IHS

Licensee=IHS Employees/1111111001, User=Wing, Bernie
Not for Resale, 05/08/2007 07:44:28 MDT

Contents

Page

Foreword iv
1 Scope 1
2 Normative references 1
3 Terms and definitions 2
4 Marking and information 3
5 Sampling 3
6 Testing and compliance 3
7 Performance 4
Annex A (normative) **Method of sampling and selecting test pieces** 7
Annex B (normative) **Determination of the standard deviation and confidence interval of the mean** 8
Annex C (normative) **Determination of water penetration resistance (WPR) after flexing** 9
Annex D (normative) **Determination of water penetration resistance (WPR) after ageing and flexing** 10
Annex E (normative) **Determination of water penetration resistance (WPR) after abrasion** 11
Annex F (normative) **Determination of water penetration resistance (WPR) after dry cleaning** 12
Annex G (normative) **Assessment of low-temperature flexibility** 13
Annex H (normative) **Determination of coating adhesion (wet)** 14
Annex I (normative) **Determination of water vapour permeability index (WVPI)** 18

© ISO 2005 – All rights reserved

Copyright International Organization for Standardization
Provided by IHS under license with ISO
No reproduction or networking permitted without license from IHS
Licensee=IHS Employees/1111111001, User=Wing, Bernie
Not for Resale, 05/08/2007 07:44:28 MDT

Foreword

ISO (the International Organization for Standardization) is a worldwide federation of national standards bodies (ISO member bodies). The work of preparing International Standards is normally carried out through ISO technical committees. Each member body interested in a subject for which a technical committee has been established has the right to be represented on that committee. International organizations, governmental and non-governmental, in liaison with ISO, also take part in the work. ISO collaborates closely with the International Electrotechnical Commission (IEC) on all matters of electrotechnical standardization.

International Standards are drafted in accordance with the rules given in the ISO/IEC Directives, Part 2.

The main task of technical committees is to prepare International Standards. Draft International Standards adopted by the technical committees are circulated to the member bodies for voting. Publication as an International Standard requires approval by at least 75 % of the member bodies casting a vote.

Attention is drawn to the possibility that some of the elements of this document may be the subject of patent rights. ISO shall not be held responsible for identifying any or all such patent rights.

ISO 8096 was prepared by Technical Committee ISO/TC 45, *Rubber and rubber products*, Subcommittee SC 4, *Products (other than hoses)*.

It cancels and replaces ISO 8096-1:1989, ISO 8096-2:1989 and ISO 8096-3:1988, which have been technically revised and combined into a single document.

© ISO 2005 – All rights reserved
Copyright International Organization for Standardization
Provided by IHS under license with ISO
No reproduction or networking permitted without license from IHS
Licensee=IHS Employees/1111111001, User=Wing, Bernie
Not for Resale, 05/08/2007 07:44:28 MDT

Rubber- or plastics-coated fabrics for water-resistant clothing — Specification

1 Scope

This International Standard specifies the requirements for water vapour permeable and non water vapour permeable coated fabrics suitable for use in the construction of water penetration resistant clothing. This standard does not address the method of fabrication of the garment. However, the physical requirements attributed to water penetration resistance of the final garment should in no way be inferior to those listed for the coated fabric.

NOTE The coding system applicable to the coating polymer(s) employed in the manufacture of these coated fabrics is given in Table 1.

2 Normative references

The following referenced documents are indispensable for the application of this document. For dated references, only the edition cited applies. For undated references, the latest edition of the referenced document (including any amendments) applies.

ISO 105-B02, *Textiles — Tests for colour fastness — Part B02: Colour fastness to artificial light: Xenon arc fading lamp test*

ISO 105-C02, *Textiles — Tests for colour fastness — Part C02: Colour fastness to washing: Test 2*

ISO 105-D01, *Textiles — Tests for colour fastness — Part D01: Colour fastness to dry cleaning*

ISO 105-D02, *Textiles — Tests for colour fastness — Part D02: Colour fastness to rubbing: Organic solvents*

ISO 105-X12, *Textiles — Tests for colour fastness — Part X12: Colour fastness to rubbing*

ISO 811, *Textile fabrics — Determination of resistance to water penetration — Hydrostatic pressure test*

ISO 1419, *Rubber- or plastics-coated fabrics — Accelerated-ageing tests*

ISO 2231, *Rubber- or plastics-coated fabrics — Standard atmospheres for conditioning and testing*

ISO 2602, *Statistical interpretation of test results — Estimation of the mean — Confidence interval*

ISO 3207, *Statistical interpretation of data — Determination of a statistical tolerance interval*

ISO 3303, *Rubber- or plastics-coated fabrics — Determination of bursting strength*

ISO 3696:1987, *Water for analytical laboratory use — Specification and test methods*

ISO 4920, *Textiles — Determination of resistance to surface wetting (spray test) of fabrics*

ISO 5470-2, *Rubber- or plastics-coated fabrics — Determination of abrasion resistance — Part 2: Martindale abrader*

© ISO 2005 – All rights reserved

Copyright International Organization for Standardization
Provided by IHS under license with ISO
No reproduction or networking permitted without license from IHS
Licensee=IHS Employees/1111111001, User=Wing, Bernie
Not for Resale, 05/08/2007 07:44:28 MDT

ISO 5978, *Rubber- or plastics-coated fabrics — Determination of blocking resistance*

ISO 6330:2000, *Textiles — Domestic washing and drying procedures for textile testing*

ISO 6451, *Plastics coated fabrics — Polyvinyl chloride coatings — Rapid method for checking fusion*

ISO 7500-1:2004, *Metallic materials — Verification of static uniaxial testing machines — Part 1: Tension/compression testing machines — Verification and calibration of the force-measuring system*

ISO 7854:1995, *Rubber- or plastics-coated fabrics — Determination of resistance to damage by flexing*

EN 471, *High-visibility warning clothing for professional use — Test methods and requirements*

BS 3424-38, *Testing coated fabrics — Part 38: Determination of wounded burst strength*

3 Terms and definitions

For the purposes of this document, the following terms and definitions apply.

3.1
coated fabric
material composed of two or more layers, at least one of which is a textile material (woven, knitted or non-woven) and at least one of which is a substantially continuous polymeric film, bonded closely together by means of an added adhesive or by the adhesive properties of one or more of the component layers

3.2
water penetration resistance
WPR
ability of a coated fabric to withstand a hydrostatic head pressure when tested in accordance with ISO 811 at a rate of increase of pressure of 60 cmH_2O/min

NOTE 1 It is recommended that the term “water penetration resistant” should not be applied to any coated fabric that does not exhibit a WPR greater than 10 kPa (approx. 100 cmH_2O) when tested in the “as received” condition. The term “water-proof” is a deprecated term, which implies that the water penetration resistance of a coated fabric is equivalent to its hydraulic bursting strength.

NOTE 2 1 cmH_2O = 98,066 5 Pa.

3.3
water vapour permeable
ability of a coated fabric to transmit water vapour above a specified level whilst maintaining a high degree of water penetration resistance

3.4
water vapour permeability index
WVPI
water vapour permeability of a material expressed as a percentage of a known reference standard

3.5
delamination
partial or whole separation of two, or more, of the component layers of a coated fabric

NOTE This can be either a fabric to polymer separation or a separation within the actual polymeric layer.

3.6
single-texture coated fabric
single-faced coated fabric
coated fabric in which one face is composed of the coating polymer and the reverse is the textile substrate

© ISO 2005 – All rights reserved
Copyright International Organization for Standardization
Provided by IHS under license with ISO
No reproduction or networking permitted without license from IHS
Licensee=IHS Employees/1111111001, User=Wing, Bernie
Not for Resale, 05/08/2007 07:44:28 MDT

3.7
double-faced coated fabric
coated fabric in which both faces are composed of a coating polymer

3.8
double-textured coated-fabric
coated fabric in which both faces of the coated fabric are of a textile nature

4 Marking and information

Each roll of coated fabric shall have a label attached bearing the following information:

a) the name and/or distinctive mark of the manufacturer and a means of identifying the manufacturing batch number;

b) the number of this International Standard and the supplier's quality code relating to the material.

5 Sampling

Samples shall be taken that are representative of the manufacturing batch from which they are drawn.

6 Testing and compliance

6.1 Population size

The minimum performance values specified in Table 3 and Table 4 shall apply to the manufacturing batch as a whole.

6.2 Tests on each sample

The tests shall be conducted as specified in Tables 3 and 4 on test pieces extracted from each sample.

6.3 Burst and tear strength tests

In the event of any individual burst or tear strength result being lower than the minimum value specified in Table 4, the results of the series of such tests shall be subject to analysis in accordance with the provisions of Annex B.

6.4 Pass/fail tests

If any of the test pieces tested for the properties specified in Table 3 and Table 4, excepting burst and tear strength, fails to conform to the requirements specified in Table 3 and Table 4, the tests which the test piece has failed shall be repeated twice. For this purpose, two further samples shall be taken from the same source as the original sample and test pieces shall be taken from each sample so that duplicate tests may be conducted.

If all the re-test results comply with the relevant requirements of Table 3 and/or Table 4, the bulk of the coated fabric that the samples represent shall be deemed to comply with this International Standard. If any of the results of the re-tests are not in accordance with the relevant requirements of Table 3 and/or Table 4, the bulk of the coated fabric that the samples represent shall be deemed not to conform to this International Standard.

© ISO 2005 – All rights reserved

Copyright International Organization for Standardization
Provided by IHS under license with ISO
No reproduction or networking permitted without license from IHS
Licensee=IHS Employees/1111111001, User=Wing, Bernie
Not for Resale, 05/08/2007 07:44:28 MDT

7 Performance

7.1 Water penetration and mechanical properties

When tested by the appropriate method given in Tables 3 and 4, the coated fabric shall conform to the minimum requirements specified in Tables 3 and 4.

7.2 Colour fastness and other physical properties

When tested by the appropriate method given in Table 4, the coated fabric shall conform to the requirements specified in Table 4.

The colour-fastness ratings specified in Table 4 shall apply to those surfaces of the coated fabric which are exposed, either as an inner or as an outer surface of the garment.

If the coated fabric is not exposed as a garment surface (e.g. a drop liner), the colour fastness to light requirements in Table 4 shall not apply.

7.3 Delamination

There shall be no evidence of delamination when the test piece is viewed without magnification after any of the tests given in Table 3 and tests 5, 6, 8, 9 and 10 in Table 4.

7.4 Colour

Where colours from EN 471 are employed, colour assessment shall be conducted in accordance with that standard.

Table 1 — Designation codes for specific coating polymers and accelerated-ageing procedures required

Polymer	Designation	Accelerated-ageing procedure
Polyurethane	PU (AU or EU)	168 h in accordance with ISO 1419 followed by three wash cycles in accordance with washing procedure 6A of ISO 6330:2000 (see Annex D)
Silicone elastomer	Q	
Acrylic or any other coating containing one or more polyurethane and/or silicone elastomers	AC	
Natural rubber	NR	168 h in accordance with ISO 1419
Polychloroprene	CR	
Butadiene-acrylonitrile	NBR	
Chlorosulfonated polyethylene	CSM	
Poly(vinyl chloride)	PVC	

© ISO 2005 – All rights reserved
Copyright International Organization for Standardization
Provided by IHS under license with ISO
No reproduction or networking permitted without license from IHS
Licensee=IHS Employees/1111111001, User=Wing, Bernie
Not for Resale, 05/08/2007 07:44:28 MDT

Table 2 — Product identification codes

Code	Brief description of use
A	Material for use in conjunction with an outer shell for leisure or workwear
B	Long-duration light-activity outer or lining material
C	Long-duration medium- to high-activity outer material
D	Long-duration activity outer workwear
E	Long-duration arduous activity outer workwear
NOTE The classification is for guidance only, and is not intended to exclude other permutations or to be limited to the end-uses indicated.	

Table 3 — Minimum requirements for water penetration resistance (WPR)

Property kPa	Requirement					Test method
	Identification code					
	A	B	C	D	E	
1. Minimum WPR after flexing	150	300	300	450	600	Annex C
2. Minimum WPR after ageing and flexing	150	250	250	300	450	Annex D
3. Minimum WPR after abrasion (where applicable)	As required by the final garment end-use specification					Annex E
4. Minimum WPR after dry cleaning (PU-coated fabric only)	150	150	150	200	250	Annex F

--`,,`,,`,,,,`,,`,`,,,,`,,,`-`-`,,`,,`,`,,`---
© ISO 2005 – All rights reserved
Copyright International Organization for Standardization
Provided by IHS under license with ISO
No reproduction or networking permitted without license from IHS
Licensee=IHS Employees/1111111001, User=Wing, Bernie
Not for Resale, 05/08/2007 07:44:28 MDT

Table 4 — Other physical requirements and colour fastness

Property	Requirement					Test method
	Identification code					
	A	B	C	D	E	
1. Minimum bursting strength (N)	150	500	1 000	2 000	3 000	ISO 3303
2. Minimum wounded tear (N) (irrespective of tearing direction)	100	150	250	350	500	BS 3424-38
3. Minimum water vapour permeability:						
WVPI (%)	70	55	60	60	45	Annex I
WVP ($g/m^2/24$ h) (see Note 1)	560	440	480	480	360	Annex I
4. Spray rating of designated outer	Minimum 4 for all codes					ISO 4920
5. Blocking after ageing — all combinations, excluding washing, where relevant (see Note 2)	Separation without damage to the polymeric coated film					ISO 5978
6. Low-temperature crack resistance (kPa)	6	6	10	10	20	Annex G
7. Colour fastness to light on designated outer surface (see Note 3)	Minimum 4 to 5 for all codes					ISO 105-B02
8. Colour fastness to washing:						
Maximum change in shade	3 to 4 for all codes; no delamation					ISO 105-C02 (liquor ratio 50:1)
Staining	Minimum 3 to 4 for all codes					
9. Colour fastness to dry cleaning (PU only):						
Maximum change in shade	4 to 5; no delamination					ISO 105-D02
Staining	Maximum 4 to 5; no delamination					
10. Colour fastness to rubbing	Minimum 4 to 5 for both faces					ISO 105-X12
11. Fusion check (PVC only)	No cracking or disintegration					ISO 6451
12. Wet coating adhesion strength (N/50 mm)	Not relevant		35	40	60	Annex H

NOTE 1 This method of test relies on an air-gap between the water and the test piece. The results cannot be compared with those from test methods that have the water in direct contact with the test piece, which leads to significantly higher values of WVP expressed in $g/m^2/24$ h.

NOTE 2 Blocking tests are unnecessary when double-textured materials are involved.

NOTE 3 Where fluorescent colours are specified within the limits outlined in EN 471, it is recommended that the colour fastness be in accordance with that standard.

© ISO 2005 – All rights reserved
Copyright International Organization for Standardization
Provided by IHS under license with ISO
No reproduction or networking permitted without license from IHS
Licensee=IHS Employees/1111111001, User=Wing, Bernie
Not for Resale, 05/08/2007 07:44:28 MDT

Annex A
(normative)

Method of sampling and selecting test pieces

A.1 In the event of dispute, the sampling requirements in Clauses A.2 to A.6 shall apply.

A.2 Select a sample from each manufacturing batch identified as such in accordance with Clause 4, at the frequency of not less than one sample per 1 000 running metres.

A.3 Unless otherwise specified by the purchaser, select samples from the end of the roll of coated fabric.

A.4 The size of samples taken from each manufacturing batch shall be such that the aggregate size of the samples is sufficient to enable test pieces to be selected for the purposes of fulfilling the test requirements in Tables 3 and 4.

A.5 The test pieces shall be selected from the samples taken in accordance with A.4, such that all samples are represented by test pieces in each of the tests conducted in accordance with the requirements of Tables 3 and 4.

A.6 In the case of multi-colour samples, all colours shall be represented in the test pieces selected for colour-fastness testing in accordance with Table 4.

--`,,```,,,,`,`,`,,`,,`,,,,`,,,,--`-`-`,,`,,`,`,,`---

© ISO 2005 – All rights reserved

Copyright International Organization for Standardization
Provided by IHS under license with ISO
No reproduction or networking permitted without license from IHS
Licensee=IHS Employees/1111111001, User=Wing, Bernie
Not for Resale, 05/08/2007 07:44:28 MDT

Annex B
(normative)

Determination of the standard deviation and confidence interval of the mean

B.1 The distribution of test results in the tests for physical properties given in Table 3 is taken to be normal.

B.2 The test results obtained from the tests for bursting strength and tear strength given in Table 3 shall be subject to statistical analysis and an estimate of the standard deviation s shall be made in accordance with ISO 3207, i.e.

$$s = \sqrt{\frac{\sum (x - \overline{x})^2}{n - 1}}$$

B.3 The 95 % confidence interval of the mean shall be calculated assuming a two-sided case in accordance with ISO 2602 and the lower limit of the mean of the population taken to be

$$\overline{x} - \frac{t_{0,975}}{\sqrt{n}} \times s$$

B.4 In the case of re-tests as required by 6.3, the results of the first series of tests shall be included among the results of the re-tests for the purposes of estimating the standard deviation and the confidence interval of the mean.

Copyright International Organization for Standardization
Provided by IHS under license with ISO
No reproduction or networking permitted without license from IHS

© ISO 2005 – All rights reserved

Licensee=IHS Employees/1111111001, User=Wing, Bernie
Not for Resale, 05/08/2007 07:44:28 MDT

Annex C
(normative)

Determination of water penetration resistance (WPR) after flexing

C.1 Cut five test pieces of a size suitable for conducting both flexing and water penetration resistance tests on the same test piece (e.g. generally of 220 mm × 190 mm). Test each of the five test pieces in accordance with C.2 and C.3.

C.2 Mount the test piece in a crumple/flex apparatus as described in method C of ISO 7854:1995 with the coated surface (that designated as such by the supplier) outermost and carry out the test for 9 000 cycles.

C.3 Remove the test piece from the crumple/flex apparatus and determine the water penetration resistance in accordance with ISO 811, with the outer surface (that designated as such by the supplier) exposed to the water. Note and record any delamination which may have occurred (see 7.3).

C.4 If any test piece exhibits seepage or leakage during the determination of water penetration resistance, repeat the test on five fresh test pieces.

© ISO 2005 – All rights reserved

Copyright International Organization for Standardization
Provided by IHS under license with ISO
No reproduction or networking permitted without license from IHS
Licensee=IHS Employees/1111111001, User=Wing, Bernie
Not for Resale, 05/08/2007 07:44:28 MDT

Annex D
(normative)

Determination of water penetration resistance (WPR) after ageing and flexing

D.1 Expose five test pieces measuring 300 mm × 250 mm to the accelerated-ageing procedure appropriate to the coating polymer as given in Table 1.

D.2 Where required by Table 1, subject the test pieces to three wash cycles in accordance with washing procedure 6A of ISO 6330:2000, using detergent (without optical brightener), followed by drying procedure C (dry flat).

D.3 Condition the test pieces in atmosphere A, B or C as defined in ISO 2231.

D.4 From each aged test piece, cut a specimen for crumple flexing having dimensions of 220 mm × 190 mm.

D.5 Mount the specimens in the crumple/flex apparatus in accordance with method C of ISO 7854:1995, coated surface (that designated as such by the supplier) outermost, and conduct the test for 9 000 cycles.

D.6 Remove the specimens from the crumple/flex apparatus and note and record any delamination which may have occurred.

D.7 Measure the water penetration resistance of each specimen in accordance with ISO 811, outer surface (that designated as such by the supplier) exposed to the water. Note and record any delamination which may have occurred (see 7.3).

D.8 If any specimen exhibits seepage or leakage during the determination of water penetration resistance, repeat the test on five fresh test pieces taken, if possible, from the original sample.

© ISO 2005 – All rights reserved
Copyright International Organization for Standardization
Provided by IHS under license with ISO
No reproduction or networking permitted without license from IHS
Licensee=IHS Employees/1111111001, User=Wing, Bernie
Not for Resale, 05/08/2007 07:44:28 MDT

Annex E
(normative)

Determination of water penetration resistance (WPR) after abrasion

E.1 Select five test pieces each measuring 125 mm × 125 mm.

E.2 Conduct 100 cycles of abrasion in accordance with ISO 5470-2, on the outer face (that designated as such by the supplier) of each of the test pieces selected in E.1, using an abradant meeting the following requirements:

a) the backing shall be of a suitable quality with a minimum mass per unit area of (125 ± 6) g/m^2;

b) the adhesive shall be water-soluble, of good quality and suitable for the purpose;

c) the abrasive shall be of good quality, shall be suitable for the purpose and shall meet the sieve analysis requirements given in Table E.1;

d) the finished abradant shall have a minimum breaking strength of 392 N/50 mm in the machine direction and 212 N/50 mm in the cross-direction;

e) the mass per unit area of the finished abradant shall be (300 ± 30) g/m^2.

Table E.1 — Sieve analysis requirements

Requirement	Sieve aperture
All to pass	212 µm
Not more than 25 % to pass	180 µm
At least 50 % to pass	125 µm
Not more than 5 % to pass	106 µm

E.3 For each of the test pieces abraded in E.2, determine the water penetration resistance in accordance with ISO 811, with the abraded surface exposed to the water. Note and record any delamination which may have occurred (see 7.3).

E.4 If any test piece exhibits seepage or leakage during the determination of water penetration resistance, repeat the test on five fresh test pieces.

© ISO 2005 – All rights reserved

Copyright International Organization for Standardization
Provided by IHS under license with ISO
No reproduction or networking permitted without license from IHS
Licensee=IHS Employees/1111111001, User=Wing, Bernie
Not for Resale, 05/08/2007 07:44:28 MDT

Annex F
(normative)

Determination of water penetration resistance (WPR) after dry cleaning

F.1 Cut out five test pieces of a size suitable for conducting water penetration resistance tests in accordance with ISO 811.

F.2 Treat each test piece separately as described in ISO 105-D01.

F.3 Determine the water penetration resistance of each of the five test pieces in accordance ISO 811, with the outer surface (that designated as such by the supplier) exposed to the water. Note and record any delamination which may have occurred (see 7.3).

F.4 If any test piece exhibits seepage or leakage during the determination of water penetration resistance, repeat the test on five fresh test pieces.

© ISO 2005 – All rights reserved
Copyright International Organization for Standardization
Provided by IHS under license with ISO
No reproduction or networking permitted without license from IHS
Licensee=IHS Employees/1111111001, User=Wing, Bernie
Not for Resale, 05/08/2007 07:44:28 MDT

Annex G
(normative)

Assessment of low-temperature flexibility

G.1 Select five test pieces suitable for conducting hydrostatic-head tests in accordance with ISO 811.

Mark the face and reverse sides of the test pieces for identification.

G.2 Fold three test pieces with the outer surface (that designated as such by the supplier) innermost, as follows:

a) make the first fold across the centre of the test piece so that the fold is parallel to the selvedge or machine direction;

b) make the second fold across the centre of the folded test piece so that the second fold lies at right angles to the selvedge or machine direction.

G.3 Fold the remaining two test pieces in the same way as described in G.2 a) and b), but with the outer surface (that designated as such by the supplier) outermost.

G.4 Place the folded test pieces in an atmosphere maintained at (–30 ± 2)° C and cover with a weight-piece (pre-cooled to this temperature) so that a pressure of 4 kPa is exerted over the folded face of each test piece.

NOTE A 113-mm-diameter test piece so folded presents an area of approximately 2 510 mm^2. A weight-piece of 1,022 kg superposed on this area would exert a pressure of 4 kPa. A test piece originally measuring 150 mm × 150 mm folded in accordance with G.2 a) and b) would present an area of 5 625 mm^2. To achieve a pressure of 4 kPa over this area, the weight-piece would have to have a mass of 2,27 kg.

G.5 Expose the test pieces to this low-temperature environment for (48 ± 2) h.

G.6 Remove the weight-piece and, wearing insulated gloves or using another suitable means of avoiding heating the test pieces, unfold each test piece inside the cold chamber. Immediately remove the unfolded test pieces from the cold chamber and place each, opened out fully flat, with the surface which formed the inside of the folded test piece against a flat, hard, horizontal surface. Cover with a weight-piece of 2,5 kg, placed over the whole of the test piece, and keep in an atmosphere maintained at (20 ± 2) °C and (65 ± 5) % r.h. for (24 ± 2) h.

G.7 On completion of this conditioning period, remove the weight-piece, examine the test piece without magnification for signs of cracking or delamination and then subject each test piece to a hydrostatic-head test in accordance with ISO 811, up to the pressure specified for the grade in Table 4. The surface which formed the inner side of the folded test piece shall be mounted uppermost (i.e. not in contact with the water). Note and record any delamination or cracking which may have occurred (see 7.3 and 6.3).

G.8 If, in G.7, any test piece fails the requirement in terms of one particular direction of folding, the repeat tests required by 6.3 shall be carried out on test pieces folded in that particular direction.

© ISO 2005 – All rights reserved

Copyright International Organization for Standardization
Provided by IHS under license with ISO
No reproduction or networking permitted without license from IHS
Licensee=IHS Employees/1111111001, User=Wing, Bernie
Not for Resale, 05/08/2007 07:44:28 MDT

Annex H
(normative)

Determination of coating adhesion (wet)

H.1 General

It is often desirable, where a coated fabric is to be employed in a damp or wet environment, to measure the coating adhesion strength when the coated fabric is wet. In so doing, it is important that the test pieces are prepared and tested before any finish is applied to any textile surface, as it has been found that attempts to remove this finish can seriously affect the strength of the coating adhesion, and thus give a misleading result.

H.2 Apparatus and materials

H.2.1 Constant rate of traverse tensile-testing machine, having a recording system for measuring the variation in applied force and conforming to grade 1 of ISO 7500-1:2004.

The central points of the two jaws of the machine shall be in the line of pull, the front edges shall be at right angles to the line of pull, and their clamping faces shall be in the same plane. The jaws shall be capable of holding the test piece without allowing it to slip, but designed so that they do not cut or otherwise weaken the test piece, and their width shall be not less than the width of the test piece. The faces of the jaws shall be smooth and flat, except that, when, even with packing, the test piece cannot be held satisfactorily with flat-faced jaws, engraved or corrugated jaws shall be used.

NOTE Suitable packing materials for use with either smooth or corrugated jaws include paper, felt, leather and plastics or rubber sheet.

H.2.2 Wetting-out solution, consisting of a 2 % (by volume) aqueous solution of sodium oleate.

H.3 Preparation of test pieces

H.3.1 General

Cut out each test piece not less than 75 mm wide and not less than 200 mm long, with the length in the longitudinal direction of the coated-fabric sample. For testing thick coatings (see H.3.2), five test pieces are required. For testing thin coatings (see H.3.3), 10 test pieces are required, from which five composite test pieces are prepared.

H.3.2 Thick coatings

Where the strength of the coating exceeds the force needed to separate the substrate and the coating, prepare five test pieces by carefully cutting through the coating to the substrate at right angles to the length of the test piece. From this cut, separate carefully the coating from the substrate for a distance sufficient to enable the test piece to be mounted in the jaws of the apparatus. Trim the width of the test piece to 50 mm ± 0,5 mm, taking care to avoid damage to the longitudinal threads of the substrate (see Figure H.1). Make gauge marks 50 mm apart on both sides of the test piece using a fine line marker, as illustrated in Figure H.1).

© ISO 2005 – All rights reserved
Copyright International Organization for Standardization
Provided by IHS under license with ISO
No reproduction or networking permitted without license from IHS
Licensee=IHS Employees/1111111001, User=Wing, Bernie
Not for Resale, 05/08/2007 07:44:28 MDT

Dimensions in millimetres

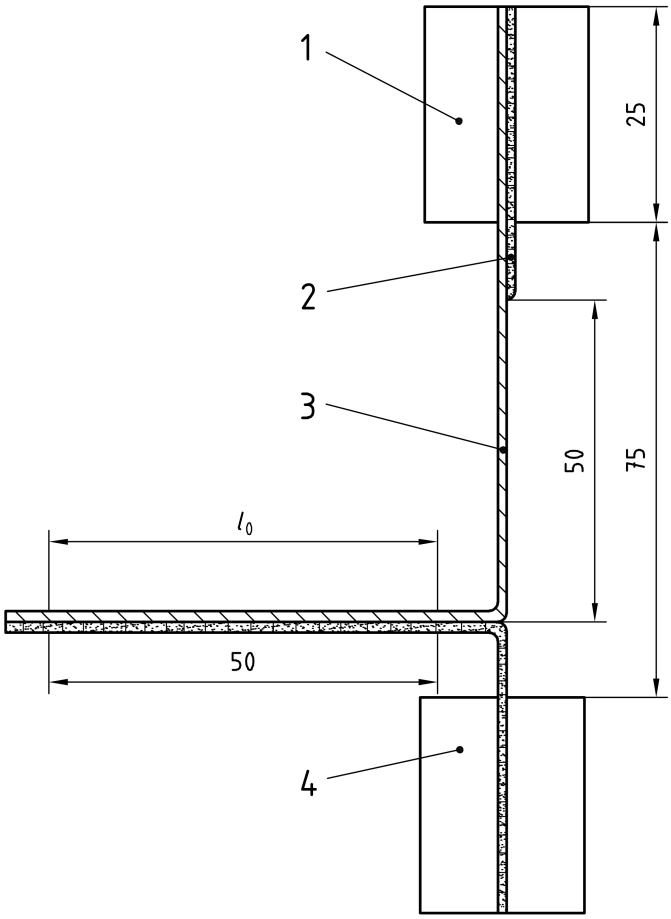

Key

1 stationary jaw
2 coating
3 fabric
4 transverse or movable jaw
l_0 gauge length

Figure H.1 — Mounting of fabrics with thick coatings

H.3.3 Thin coatings

Where the coating layer is not sufficiently strong to be stripped continuously from the substrata, but where the coating layer can be distinctly identified from the substrate and can be cut through separately, bond two test pieces of the same material face to face, as illustrated in Figure H.2, avoiding the first 50 mm, using an adhesive system suitable for the type of coating being evaluated.

NOTE 1 It is important that the adhesive chosen does not cause the coating to swell irreversibly or otherwise affect the coating/fabric bond strength.

If necessary, use a plain-weave cotton fabric, desized and bleached, in place of one of the coated test pieces. Alternatively, when testing PU coated fabrics, use a sheet of rubber whose surface peel and tear strength is greater than that of the PU coating, in conjunction with a suitable adhesive.

Make gauge marks 50 mm apart on both sides of the test piece using a fine line marker, as illustrated in Figure H.2.

© ISO 2005 – All rights reserved

Copyright International Organization for Standardization
Provided by IHS under license with ISO
No reproduction or networking permitted without license from IHS
Licensee=IHS Employees/1111111001, User=Wing, Bernie
Not for Resale, 05/08/2007 07:44:28 MDT

NOTE 2 Where the coating surface is to be treated in any way which may inhibit the coating-to-coating bond, e.g. siliconized, it is recommended that the test be conducted before any such treatment is applied.

Dimensions in millimetres

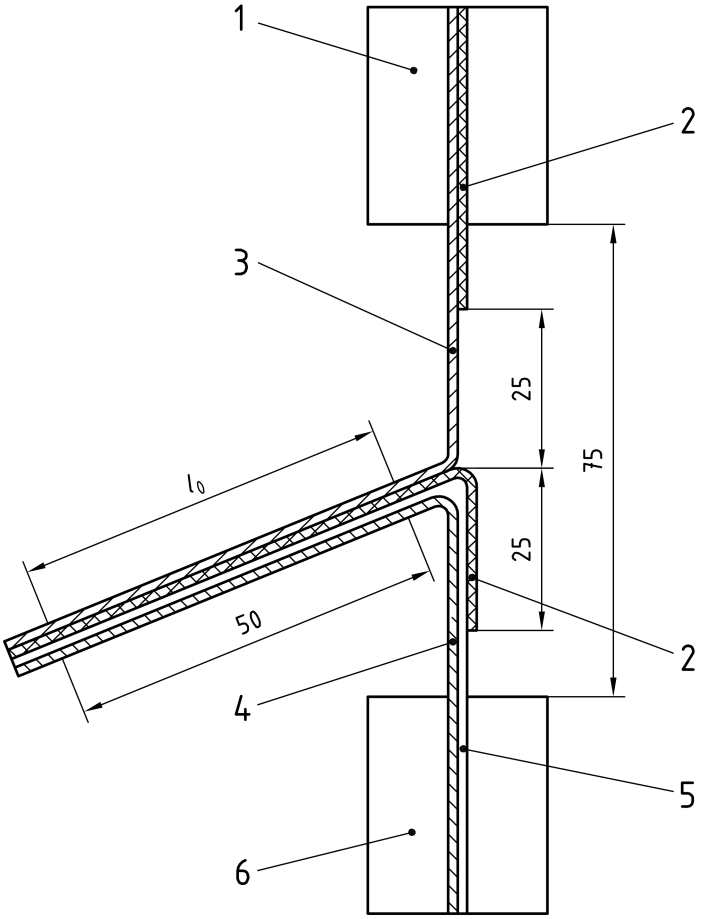

Key

1 stationary jaw
2 coating 1
3 fabric 1
4 fabric 2
5 coating 2
6 transverse or movable jaw
l_0 gauge length

Figure H.2 — Mounting of fabrics with thin coatings

H.3.4 Soaking

After preparation in accordance with H.3.2 or H.3.3, immerse each test piece in the wetting-out solution (H.2.2) for 30 min at 20 °C ± 2 °C using a liquor ratio of 20:1.

H.4 Procedure

Remove the test piece from the wetting-out solution and immediately, without drying, clamp the separate plies of the prepared test piece in the jaws of the apparatus (H.2.1) in a central position and without any noticeable or excess slack in the test piece, as indicated in Figure H.1 or Figure H.2, so that at least 10 mm of dynamic separation of the plies will occur prior to the first gauge mark being reached.

© ISO 2005 – All rights reserved
Copyright International Organization for Standardization
Provided by IHS under license with ISO
No reproduction or networking permitted without license from IHS
Licensee=IHS Employees/1111111001, User=Wing, Bernie
Not for Resale, 05/08/2007 07:44:28 MDT

Set the traversing jaw in motion and obtain a record of the fluctuation in applied force as ply separation proceeds over the gauge length, i.e. a distance of approximately 50 mm.

H.5 Calculation and expression of results

Record the maximum value of the adhesion strength, in newtons, for each test piece.

Calculate the arithmetic mean value of the five results so recorded and report this as the adhesion strength (wet), in newtons.

© ISO 2005 – All rights reserved

Copyright International Organization for Standardization
Provided by IHS under license with ISO
No reproduction or networking permitted without license from IHS
Licensee=IHS Employees/1111111001, User=Wing, Bernie
Not for Resale, 05/08/2007 07:44:28 MDT

Annex I
(normative)

Determination of water vapour permeability index (WVPI)

I.1 Principle

A test piece is sealed over the open mouth of a test dish which contains water, and the assembly placed in a controlled atmosphere. Following a period to establish equilibrium of the water vapour pressure gradient across the test piece, successive weighings of the test piece/dish assembly are made and the rate of water vapour permeation through the test piece is determined.

The water vapour permeability index is calculated by expressing water vapour permeability of the coated fabric as a percentage of the water vapour permeability of a reference woven fabric, which is tested in a similar manner, concurrently and alongside the test piece.

NOTE The method used is based on that commonly known as the Turl dish or control dish method which is used to measure the resistance of materials to water vapour diffusion and is particularly suitable for clothing materials.

I.2 Apparatus and materials

I.2.1 Reference fabric, consisting of a precision, high-tenacity polyester woven monofilament mesh having the following characteristics:

mesh aperture	18 µm
yarn diameter	32 µm
threads per cm	196,1
open area	12,5 % (approx.)

NOTE This fabric is tightly woven and constructed from synthetic fibres of low moisture regain to avoid sagging under conditions of high relative humidity.

I.2.2 Test chamber, consisting of a room or cabinet controlled at the standard temperate atmosphere for testing textiles, i.e. a relative humidity of (65 ± 5) % and a temperature of (20 ± 2) °C. The chamber shall be of sufficient size to contain the turntable and the test piece/dish assemblies and to maintain them within the specified limits of temperature and humidity.

I.2.3 Cutting device, capable of cutting circular test pieces with a diameter not less than the outer diameter of the dish.

I.2.4 Burette, conforming to class B, or better.

I.2.5 Open dishes, fitted with cover rings, of the approximate dimensions shown in Figure I.1, manufactured from a rigid, lightweight, corrosion-resistant material. The interior walls of the dishes shall be treated to reduce their wettability in order to ensure a uniform vertical gradient of water vapour pressure over the entire area of the dish.

NOTE A baked-on silicone treatment has been found satisfactory for metal dishes.

© ISO 2005 – All rights reserved
Copyright International Organization for Standardization
Provided by IHS under license with ISO
No reproduction or networking permitted without license from IHS
Licensee=IHS Employees/1111111001, User=Wing, Bernie
Not for Resale, 05/08/2007 07:44:28 MDT

To ensure accuracy in measuring the water vapour loss, the dishes should preferably be of low mass, e.g. manufactured from materials of low specific gravity. Aluminium alloy, e.g. material designation 6082, has been found to be a satisfactory material for the dishes.

Each dish and its corresponding cover ring should preferably be numbered for identification purposes.

Dimensions in millimetres

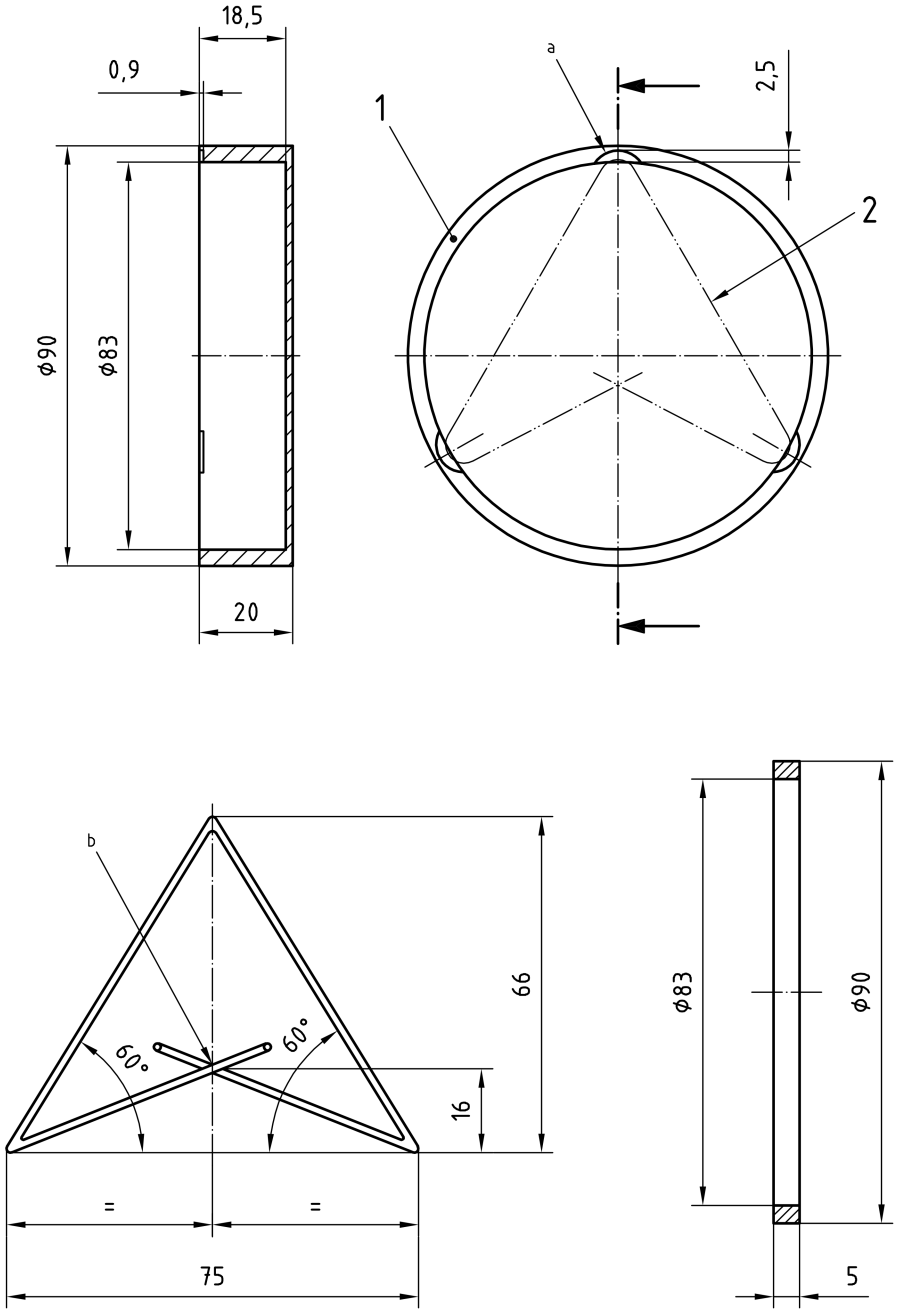

Key

1 dish

2 triangular support

a Three 8-mm-diameter semi-circular recesses cut into rim of dish 120° apart.

b Spot-weld and flatten.

Figure I.1 — Dish, test piece support and cover ring

© ISO 2005 – All rights reserved

Copyright International Organization for Standardization
Provided by IHS under license with ISO
No reproduction or networking permitted without license from IHS
Licensee=IHS Employees/1111111001, User=Wing, Bernie
Not for Resale, 05/08/2007 07:44:28 MDT

I.2.6 Test piece support, designed to prevent the test piece from sagging into the dish (which would alter the depth of the air layer between the test piece and the surface of the water).

NOTE One type of support, shown in Figure I.1, is constructed from stainless-steel wire 0,091 4 mm (0.036 in) in diameter and fits into three semi-circular depressions spaced 120° apart and cut into the rim of the dish. The depth of the depressions is such that, with the support in place, the cover ring just fits flush onto the dish rim.

I.2.7 Means of sealing the test piece to the rim of the dish and the cover ring in such a manner as to prevent leakage of water vapour.

One way of doing this is described in I.3.4, which requires the following:

I.2.7.1 Quick-drying adhesive cement, for sealing the test piece to the rim of the dish.

Neither the adhesive nor its solvent shall react with or irreversibly alter any part of the test fabric. A general-purpose, clear PVC/nitrile contact adhesive has been found satisfactory for this purpose.

I.2.7.2 Pressure-sensitive, adhesive-backed polymer tape, with negligible water vapour permeability, for securing the cover ring to the dish.

NOTE PVC electrical insulating tape approximately 10 mm to 15 mm wide has been found satisfactory for this purpose.

I.2.8 Turntable, capable of carrying at least six test piece/dish assemblies, which rotates at a constant speed to give a slow, even and constant flow of air over the outside surfaces of the test pieces on the dishes. The speed of the test piece/dish assemblies shall not exceed 6 m/min. Means of accurately levelling the turntable shall be provided to ensure a uniform layer of still air inside the test piece/dish assemblies. The turntable shall be isolated from any vibration or heat generated by its motor.

A turntable of the dimensions shown in Figure I.2 and rotating at approximately 2 rpm has been found satisfactory. A turntable is more satisfactory than an electric fan for generating a slow, even and constant air flow over all of the test piece/dish assemblies. Larger turntables carrying larger numbers of test piece/dish assemblies can obviously be used. Providing the test piece/dish assemblies are equidistant from the centre of the turntable, the air flow over each will be the same.

I.2.9 Balance, capable of weighing to within 0,01 g.

The balance shall be positioned close to, and preferably inside, the test chamber to minimize fluctuations in the atmospheric conditions within the chamber on weighing the test dishes.

I.2.10 Timer, capable of timing to within ± 1 min the intervals between weighings over a period of at least 16 h.

I.2.11 Water, conforming to grade 3 of ISO 3696:1987.

I.3 Procedure

I.3.1 Take care throughout all handling operations to keep the test piece/dish assemblies level and to avoid splashing the inside surface of the test or reference fabric.

I.3.2 Condition the test fabric and reference fabric (I.2.1) for at least 1 h in the test chamber (I.2.2).

I.3.3 Using the cutting device (I.2.3), cut a minimum of five test pieces from each fabric to be tested and a minimum of two test pieces from the reference fabric, preferably without removing the test fabric or reference fabric from the test chamber.

© ISO 2005 – All rights reserved
Copyright International Organization for Standardization
Provided by IHS under license with ISO
No reproduction or networking permitted without license from IHS
Licensee=IHS Employees/1111111001, User=Wing, Bernie
Not for Resale, 05/08/2007 07:44:28 MDT

I.3.4 Using the burette (I.2.4), transfer to each open dish (I.2.5) a volume of water (I.2.11) at (20 ± 2) °C, determined in advance from the dimensions of the dish, so that a (10 ± 1)-mm-deep layer of air will be left between the surface of the water and the underside of the test piece.

NOTE 46 ml of water placed in a dish constructed to the dimensions shown in Figure I.2 creates an internal air layer (10 ± 1) mm deep.

Position the test piece support (I.2.6) in the dish. If an adhesive is to be employed for sealing the test piece in place, follow the following procedure:

Apply a thin continuous layer of adhesive cement (I.2.7.1) to the rim of the dish. Carefully place the test piece on the rim of the dish, avoiding contamination of the exposed test area of the fabric. Position the test piece such that the surface which will be on the outside of the article of clothing to be manufactured from the fabric is uppermost. Place the cover ring over the rim of the dish, now sealed by the test piece, press it down firmly and apply a strip of adhesive tape (I.2.7.2) round the whole circumference to seal the joint between the cover ring and the dish. Ensure that the edge of the adhesive tape does not project above the cover ring.

I.3.5 Place each test assembly (i.e. dish plus test piece) in its position on the turntable (I.2.8).

I.3.6 Rotate the turntable and test assemblies in the test chamber for not less than 1 h to establish equilibrium of the water vapour gradient in each assembly.

I.3.7 At the end of the equilibration period, weigh each assembly on the balance (I.2.9) to the nearest 0,01 g. Record the mass of each assembly and the time at which the assembly was weighed. Replace each assembly on the turntable after weighing.

I.3.8 Rotate the turntable in the test chamber for a further period of at least 16 h.

NOTE If, for internal quality-control purposes, the period of controlled exposure is less than 16 h (e.g. 8 h), the balance (I.2.9) needs to be accurate to within 0,001 g.

I.3.9 Determine the internal diameter of each dish as the mean of two measurements taken at right angles.

© ISO 2005 – All rights reserved

Copyright International Organization for Standardization
Provided by IHS under license with ISO
No reproduction or networking permitted without license from IHS
Licensee=IHS Employees/1111111001, User=Wing, Bernie
Not for Resale, 05/08/2007 07:44:28 MDT

Dimensions in millimetres

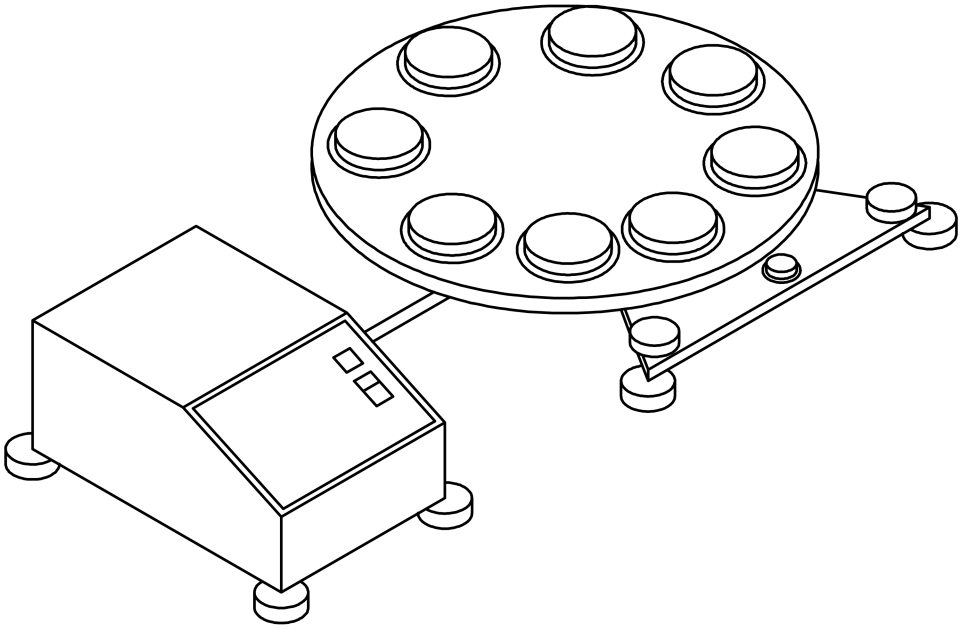

a) Example of turntable and motor assembly

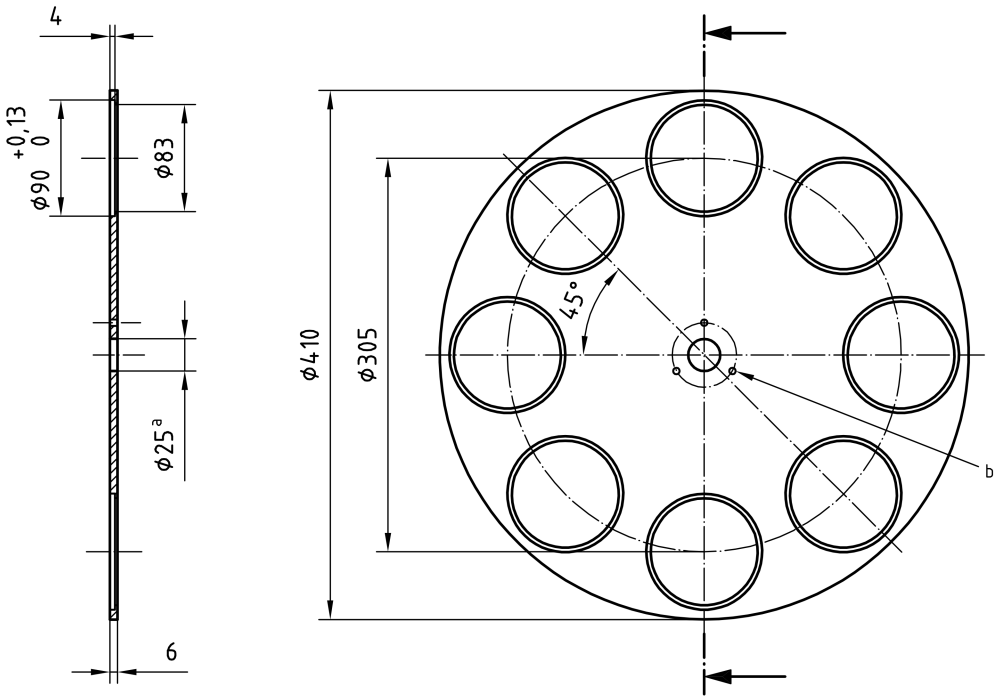

b) Top view and section

a Reamed.

b Three ϕ 5 mm holes equispaced on 50-mm-diameter pitch circle.

Figure I.2 — Turntable

© ISO 2005 – All rights reserved
Copyright International Organization for Standardization
Provided by IHS under license with ISO
No reproduction or networking permitted without license from IHS
Licensee=IHS Employees/1111111001, User=Wing, Bernie
Not for Resale, 05/08/2007 07:44:28 MDT

I.4 Expression of results

The water vapour permeability index (WVPI) is given by the following equation:

$$\text{WVPI} = \frac{(\text{WVP})_\text{f}}{(\text{WVP})_\text{r}} \times 100$$

where

$(\text{WVP})_\text{f}$ is the mean water vapour permeability of the fabric under test, expressed in g/m^2 per 24 h;

$(\text{WVP})_\text{r}$ is the mean water vapour permeability of the reference fabric, expressed in g/m^2 per 24 h

and

$$\text{WVP} = \frac{24m}{At}$$ in which WVP can be $(\text{WVP})_\text{f}$ or $(\text{WVP})_\text{r}$

where

m is the loss in mass of the assembly over the period of time t (in g);

t is the time between successive weighings of the assembly (in h);

A is the exposed area of the test fabric (equal to the internal cross-sectional area of the top of the dish) (in m^2), given by the equation

$$A = \frac{\pi d^2}{4} \times 10^{-6}$$

where d is the internal diameter of the top of the dish (in mm).

NOTE For all practical purposes

$$\text{WVPI} = \frac{\text{Mean loss in mass of test specimen}}{\text{Mean loss in mass of reference fabric}} \times 100$$

providing the controlled exposure time t is identical for both the test piece and the reference fabric.

I.5 Test report

The test report shall include all the following particulars:

a) a full description of the coated fabric tested;

b) the means used to seal the test piece to the top of the dish (see I.2.7);

c) the period of exposure to the controlled atmosphere (see I.3.8);

d) the mean water vapour permeability index (WVPI) calculated in accordance with I.4;

e) any deviations from the standard test procedure;

f) the date of the test.

© ISO 2005 – All rights reserved

Copyright International Organization for Standardization
Provided by IHS under license with ISO
No reproduction or networking permitted without license from IHS
Licensee=IHS Employees/1111111001, User=Wing, Bernie
Not for Resale, 05/08/2007 07:44:28 MDT

ICS 59.080.40

Price based on 23 pages

--`,,`,,`,`,,`,`,`,,`,`,`,,`,`,`,,`,`,`,,`,`---

© ISO 2005 – All rights reserved

Copyright International Organization for Standardization
Provided by IHS under license with ISO
No reproduction or networking permitted without license from IHS

Licensee=IHS Employees/1111111001, User=Wing, Bernie
Not for Resale, 05/08/2007 07:44:28 MDT