INTERNATIONAL STANDARD

ISO 7175-1

First edition
1997-08-01

Children's cots and folding cots for domestic use —

Part 1:
Safety requirements

Lits fixes et lits pliants pour enfants à usage domestique —

Partie 1: Exigences de sécurité

Reference number
ISO 7175-1:1997(E)

Foreword

ISO (the International Organization for Standardization) is a worldwide federation of national standards bodies (ISO member bodies). The work of preparing International Standards is normally carried out through ISO technical committees. Each member body interested in a subject for which a technical committee has been established has the right to be represented on that committee. International organizations, governmental and non-governmental, in liaison with ISO, also take part in the work. ISO collaborates closely with the International Electrotechnical Commission (IEC) on all matters of electrotechnical standardization.

Draft International Standards adopted by the technical committees are circulated to the member bodies for voting. Publication as an International Standard requires approval by at least 75 % of the member bodies casting a vote.

International Standard ISO 7175-1 was prepared by Technical Committee ISO/TC 136, *Furniture*, Subcommittee SC 5, *Domestic furniture*.

ISO 7175 consists of the following parts, under the general title *Children's cots:*

— *Part 1: Safety requirements*

— *Part 2: Test methods*

Annex A of this part of ISO 7175 is for information only.

© ISO 1997

All rights reserved. Unless otherwise specified, no part of this publication may be reproduced or utilized in any form or by any means, electronic or mechanical, including photocopying and microfilm, without permission in writing from the publisher.

International Organization for Standardization
Case postale 56 • CH-1211 Genève 20 • Switzerland
Internet central@iso.ch
X.400 c=ch; a=400net; p=iso; o=isocs; s=central

Printed in Switzerland

Children's cots and folding cots for domestic use —

Part 1:
Safety requirements

1 Scope

This part of ISO 7175 specifies requirements relating to the safety of children's cots and folding cots for domestic use.

It is applicable to cots and folding cots with an internal length of between 900 mm and 1 400 mm. It does not cover rocking and swinging cots.

Annex A summarizes the dimensions referred to in this part of ISO 7175.

2 Normative references

The following standards contain provisions, which, through reference in this text, constitute provisions of this part of ISO 7175. At the time of publication, the editions indicated were valid. All standards are subject to revision, and parties to agreements based on this part of ISO 7175 are encouraged to investigate the possibility of applying the most recent editions of the standards listed below. Members of IEC and ISO maintain registers of currently valid International Standards.

ISO 8124-1—[1], *Safety of toys — Part 1: Mechanical and physical properties.*

ISO 8124-3—[1], *Safety of toys — Part 3: Migration of certain elements.*

ISO 7175-2:1997, *Children's cots and folding cots for domestic use — Part 2: Test methods.*

3 Definitions

For the purposes of this part of ISO 7175, the following definition applies.

3.1 folding cot: Tall-sided bed which can be dismantled or folded for transportation.

NOTE — This does not include items such as carry cots intended for the transportation of infants.

1) To be published.

4 Safety requirements

Cots that can be converted into other items (e.g. changing units, playpens) shall, when converted, fulfil the requirements of the relevant standard for that item.

4.1 Materials

4.1.1 Wood, wood-based material and material of vegetable origin shall be free from decay and insect attack.

4.1.2 The manufacturer/importer/retailer shall provide verification that materials and surfaces accessible to the child, i.e. all internal materials and surfaces, fulfil the requirements of ISO 8134-3.

4.1.3 Metal within the reach of the child shall either be made of corrosion-resistant materials or be protected against corrosion.

4.2 Construction

4.2.1 Exposed edges and protruding parts shall be chamfered and free of burrs or sharp edges (see figure 1). There shall be no open-ended tubes.

Dimensions in millimetres

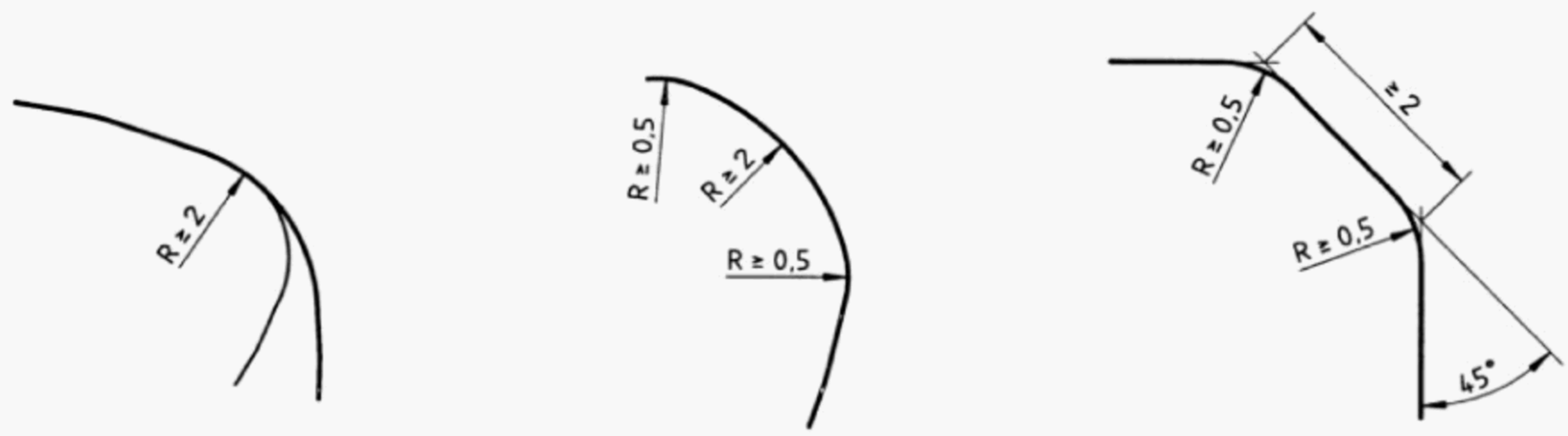

Figure 1 — Examples for required minimum radii of edges and corners

Small components such as hinges, brackets and catches shall be free of burrs and sharp edges.

NOTE — The minimum radii shown in figure 1 do not apply to these.

4.2.2 Ledges on the inside of the cot that protrude more than 5 mm from the vertical plane shall be at least 600 mm above the bed base at its lowest position and from parts of the sides and ends on which the child can stand.

Reliefs in the internal surfaces of the cot deeper than 5 mm shall be at least 600 mm above the bed base at its lowest position and from parts of the sides and ends on which the child can stand. If ledges and reliefs are combined, the total depth shall not exceed 5 mm.

Any fretwork cut-outs shall be at least 600 mm above the bed base at its lowest position and from parts of the sides on which the child can stand.

Transfers shall not be used on the internal surfaces of the cot accessible to the child.

4.2.3 Any hole into which a 7 mm diameter plug gauge can fit shall not exceed 10 mm in depth, unless the hole satisfies the requirements of 4.4.2 and 4.4.3.

4.2.4 When tested in accordance with 5.3.3 of ISO 7175-2:1997, neither the test chain nor the disc shall be caught by any part accessible from inside the cot.

NOTES

1 Outside parts accessible from inside are those which can be touched by the test chain when guided along the uppermost part of the side rails and the bed ends from inside the cot.

2 The bed base is considered as not accessible because it is covered by the mattress.

4.2.5 Castors shall not be fitted except in one of the following arrangements:

a) two castors and two legs; or

b) four castors, of which at least two can be locked.

The locks shall prevent the castors from rolling and they shall not unlock when tested in accordance with 5.11 of ISO 7175-2:1997.

4.2.6 Connecting screws for direct fastening (e.g. self-tapping screws) shall not be used for the assembly of any component that is designed to be removed or loosened when dismantling the cot for purposes of transportation or storage.

4.2.7 If the bed base is adjustable, it shall not be possible to adjust it from a higher position to a lower position without the use of a tool.

4.2.8 The mechanism used for controlling any dropside shall engage automatically when the dropside is raised and shall consist of the following:

a) two fastening devices, separated by a distance of at least 850 mm, that have to be operated simultaneously; or

b) a system that requires at least two separate but simultaneous actions operating on different principles; or

c) a system that requires at least two consecutive actions operating on different principles, the operation of the second being dependent on the first having been carried out and sustained; or

d) locking mechanisms so constructed that the residual force for operating them is at least 50 N when tested in accordance with 5.10.2 of ISO 7175-2:1997.

4.2.9 In order to prevent a folding cot from folding unintentionally, the folding system shall be equipped with a locking mechanism.

When tested in accordance with 5.10.1 of ISO 7175-2:1997, the folding cot shall not fold.

When the folding cot is erected for use, either:

a) it shall not be possible for a child to lift the base or a part of the base when it is inside the bed; or

b) a minimum force of 50 N shall be required to release the locking mechanism of the folding system before and after being tested in accordance with 5.10.2 of ISO 7175-2:1997; or

c) at least two consecutive actions shall be required to release the locking mechanism of the folding system, the operation of the second being dependent on the first having been carried out and sustained; or

d) at least two separate but simultaneous actions, operating on different principles, shall be required to release the locking mechanism of the folding system; or

e) two fastening devices, separated by a distance of at least 850 mm, that have to be operated simultaneously, shall be required to release the locking mechanism of the folding system.

Locking mechanisms other than those for dropside and folding mechanisms shall have a residual force of at least 50 N for operating when tested in accordance with 5.10.2 of ISO 7175-2:1997.

4.2.10 When tested in accordance with 5.4 of ISO 7175-2:1997, any part that can be detached shall not fit wholly within the cylinder.

NOTE — Components are considered detachable if children can grip them with their teeth or fingers.

4.2.11 Folding cots shall be designed and constructed in such a way as to prevent injury from scissoring, shearing or pinching when the product has been erected for use.

4.3 Bed base

4.3.1 When tested in accordance with 5.3.2 of ISO 7175-2:1997, it shall not be possible for the 25 mm cone to pass through the aperture between the bed base and the sides, and between the bed base and the ends.

4.3.2 When tested in accordance with 5.3.2 of ISO 7175-2:1997, it shall not be possible for the 60 mm cone to pass through the aperture between two adjacent slats of the bed base.

4.3.3 When the bed base is made of mesh, it shall not be possible for the 85 mm cone as described in 5.3.2 of ISO 7175-2:1997 to pass through the aperture of the mesh. The diameter of the wire shall be not less than 2 mm.

4.3.4 When tested in accordance with 5.5 of ISO 7175-2:1997, no element of the bed base shall break, nor shall the bed base become dislodged, nor shall the cot display any structural damage.

4.4 Sides and ends

4.4.1 The internal height of the sides and ends shall be at least 600 mm, when tested in accordance with 5.3.1 of ISO 7175-2:1997 and during the test in accordance with 5.8.1 of ISO 7175-2:1997 under load. After removal of the test force, the internal height of the sides shall remain at least 600 mm.

4.4.2 The effective diameter of holes and the distance between two structural members, with the exception of the guide rod and bed post, shall be $\left(60\,^{+5}_{-15}\right)$ mm, when tested in accordance with 5.3.2 of ISO 7175-2:1997. The minimum dimension applies to testing without load and the maximum dimension applies to testing with load.

4.4.3 The distance between the dropside guide rod and bed post shall be between 0 and 7 mm or between 12 mm and 25 mm.

4.4.4 When tested in accordance with 5.6 and 5.7 of ISO 7175-2:1997, the slats or sides and ends shall neither break nor become detached from the fastening, nor shall the permanent deformation of any side slat exceed 2 mm. Fittings and fastening devices shall not be damaged or detached and shall continue to function normally.

4.4.5 When tested in accordance with 5.8.1 of ISO 7175-2:1997, no fracture or deformation or any other damage shall occur.

4.4.6 In the highest position of the bed base, the distance between its upper side and the upper edge of the cot side or end shall be at least 300 mm, measured from the lowest point of the side or end. Where the cot side is adjustable in height, this requirement applies to its highest position.

4.4.7 When the sides or ends are made of mesh, it shall not be possible for the 7 mm cone, as described in 5.3.2 of ISO 7175-2:1997, to pass through the holes of the mesh.

4.5 Frame

When tested in accordance with 5.8.1 and 5.8.2 of ISO 7175-2:1997, the fittings and fastening devices shall not be damaged, loosened or detached and the cot shall continue to function normally.

4.6 Stability

When tested in accordance with 5.9 of ISO 7175-2:1997, not more than one leg or corner of the cot shall lift from the floor.

5 Packaging

Any plastic covering used as packaging for cots, folding cots or mattresses, if applicable, that does not fulfil the requirements of ISO 8124-1 shall be conspicuously marked with the following warning:

To avoid danger of suffocation, remove this plastic cover before using this article. This cover should then be destroyed or kept away from babies and children.

6 Instructions for use

Instructions shall be provided in the official language(s) of the country where the cot is sold.

These instructions shall be headed:

IMPORTANT — RETAIN FOR FUTURE REFERENCE — READ CAREFULLY.

These instructions shall include the following:

a) a statement that a folding cot is ready for use only when the locking mechanisms of the folding system are engaged;

b) if the height of the bed base is adjustable, a statement that the lowest position is the safest and that the base should always be used in that position as soon as the baby is old enough to sit up. When adjustable sides are provided, include the additional statement:

   If you leave the child unattended in the cot, always make sure that the dropside is in the highest position;

c) where detachable support rails are provided to support the bed base above its lowest position, a statement that it is essential to remove these rails before the cot is used in its lowest position;

d) an assembly drawing, a list and description of all parts and tools required for assembly and a diagram of the bolts and other fastenings required;

e) a statement drawing the attention of the user to the risk of leaving anything in the cot which could provide a foothold or present a danger of suffocation or strangulation;

f) a statement that the thickness of the mattress chosen shall be such that the internal height (surface of the mattress to the upper edge of the bed frame) is at least 500 mm in the lowest position of the bed base and at least 200 mm in the highest position of the bed base;

g) a statement that all assembly fittings should always be tightened properly and that care should be taken that no screws are loose, because a child could trap parts of the body or clothing (e.g. strings, necklaces, ribbons for babies' dummies, etc.) which would pose a risk of strangulation;

h) a recommendation concerning the size of the mattress when not sold with the cot;

i) a warning to be aware of the risk of open fire and other sources of strong heat, such as electric bar fires, gas fires, etc. in the near vicinity of the cot.

7 Marking

All cots for which a claim of conformity to this part of ISO 7175 is made shall be permanently marked with the following information:

a) the name, registered tradename or registered trademark of either the manufacturer or distributor or retailer, together with additional means of identifying the manufacturer;

b) the number and date of this part of ISO 7175;

c) a line or other marking on the cot side, at least 200 mm below the top, indicating the maximum height or thickness of the mattress; it is also permissible to make a statement about the maximum permitted height or thickness of the mattress.

Annex A
(informative)

Survey of dimensions in accordance with this part of ISO 7175

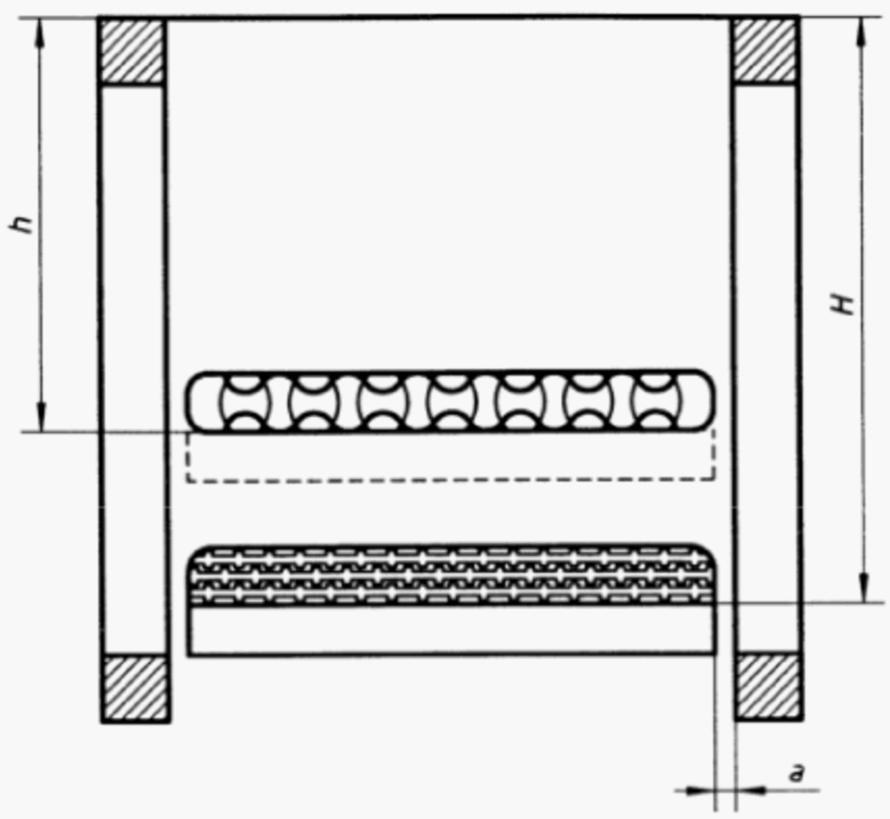

Figure A.1 — Cross section

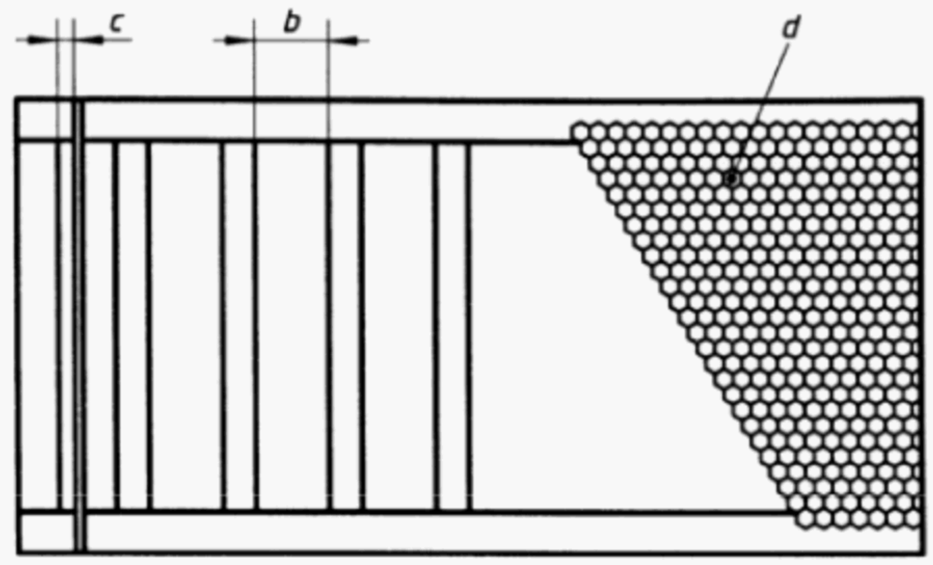

Figure A.2 — Vertical view of sides and ends

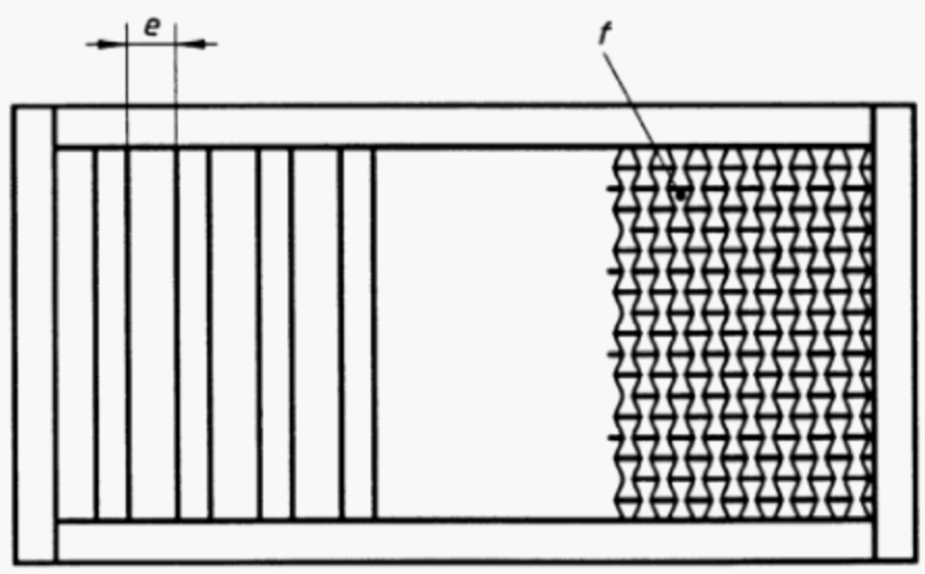

Figure A.3 — Plan view of bed base

Table A.1

Symbols	In accordance with subclause	Dimension mm
a	4.3.1	25
b	4.4.2	$60\left(^{+5}_{-15}\right)$
c	4.4.3	0 to 7; 12 to 25
d	4.4.7	7
e	4.3.2	60
f	4.3.3	85
h	4.4.6	300
H	4.4.1	600

This page intentionally left blank

This page intentionally left blank

© ISO

ICS 97.140; 97.190

Descriptors: furniture, childrens furniture, beds, specifications, safety requirements, marking.

Price based on 7 pages