INTERNATIONAL STANDARD

# ISO 14692-4

First edition
2002-12-15

# Petroleum and natural gas industries — Glass-reinforced plastics (GRP) piping —

## Part 4: Fabrication, installation and operation

*Industries du pétrole et du gaz naturel — Canalisations en plastique renforcé de verre (PRV) —*

*Partie 4: Construction, installation et mise en œuvre*

Reference number
ISO 14692-4:2002(E)

© ISO 2002

Copyright International Organization for Standardization
Provided by IHS under license with ISO
No reproduction or networking permitted without license from IHS

Not for Resale

**PDF disclaimer**

This PDF file may contain embedded typefaces. In accordance with Adobe's licensing policy, this file may be printed or viewed but shall not be edited unless the typefaces which are embedded are licensed to and installed on the computer performing the editing. In downloading this file, parties accept therein the responsibility of not infringing Adobe's licensing policy. The ISO Central Secretariat accepts no liability in this area.

Adobe is a trademark of Adobe Systems Incorporated.

Details of the software products used to create this PDF file can be found in the General Info relative to the file; the PDF-creation parameters were optimized for printing. Every care has been taken to ensure that the file is suitable for use by ISO member bodies. In the unlikely event that a problem relating to it is found, please inform the Central Secretariat at the address given below.

© ISO 2002

All rights reserved. Unless otherwise specified, no part of this publication may be reproduced or utilized in any form or by any means, electronic or mechanical, including photocopying and microfilm, without permission in writing from either ISO at the address below or ISO's member body in the country of the requester.

ISO copyright office
Case postale 56 • CH-1211 Geneva 20
Tel. + 41 22 749 01 11
Fax + 41 22 749 09 47
E-mail copyright@iso.org
Web www.iso.org

Published in Switzerland

Copyright International Organization for Standardization
Provided by IHS under license with ISO
No reproduction or networking permitted without license from IHS

Not for Resale

© ISO 2002 — All rights reserved

# Contents

Page


Introduction ..... v

1 Scope ..... 1

2 Normative references ..... 1

3 Terms and definitions ..... 1

4 Symbols and abbreviated terms ..... 2

5 Fabrication and installation ..... 2
5.1 Delivery, inspection and documentation of GRP piping ..... 2
5.2 Handling and storage ..... 2
5.3 System design documentation ..... 2
5.4 Installer requirements ..... 3
5.5 Installation methods ..... 3
5.6 System testing ..... 12
5.7 Inspection ..... 13
5.8 Certification and documentation ..... 15
5.9 Repair after installation ..... 15

6 Operations ..... 15
6.1 Operator's documentation ..... 15
6.2 Maintenance and repair ..... 17
6.3 Repair methods ..... 19
6.4 Modifications and tie-ins ..... 21
6.5 Requirements for testing and re-certification ..... 21
6.6 Decommissioning ..... 21

**Annex A** (normative) **Defect types — Acceptance criteria and corrective actions** ..... 22

**Annex B** (normative) **Handling and storage** ..... 29

**Annex C** (informative) **Guidance for use of jointing methods** ..... 32

**Annex D** (normative) **Qualification of pipe fitter, supervisor and inspector** ..... 41

**Annex E** (informative) **Guidance on NDE methods** ..... 47

**Annex F** (normative) **Health and safety** ..... 51

**Bibliography** ..... 52


© ISO 2002 – All rights reserved

Copyright International Organization for Standardization
Provided by IHS under license with ISO
No reproduction or networking permitted without license from IHS
Not for Resale

# Foreword

ISO (the International Organization for Standardization) is a worldwide federation of national standards bodies (ISO member bodies). The work of preparing International Standards is normally carried out through ISO technical committees. Each member body interested in a subject for which a technical committee has been established has the right to be represented on that committee. International organizations, governmental and non-governmental, in liaison with ISO, also take part in the work. ISO collaborates closely with the International Electrotechnical Commission (IEC) on all matters of electrotechnical standardization.

International Standards are drafted in accordance with the rules given in the ISO/IEC Directives, Part 2.

The main task of technical committees is to prepare International Standards. Draft International Standards adopted by the technical committees are circulated to the member bodies for voting. Publication as an International Standard requires approval by at least 75 % of the member bodies casting a vote.

Attention is drawn to the possibility that some of the elements of this document may be the subject of patent rights. ISO shall not be held responsible for identifying any or all such patent rights.

ISO 14692-4 was prepared by Technical Committee ISO/TC 67, *Materials, equipment and offshore structures for petroleum, petrochemical and natural gas industries*, Subcommittee SC 6, *Processing equipment and systems*.

ISO 14692 consists of the following parts, under the general title *Petroleum and natural gas industries — Glass-reinforced plastics (GRP) piping*:

— *Part 1: Vocabulary, symbols, applications and materials*

— *Part 2: Qualification and manufacture*

— *Part 3: System design*

— *Part 4: Fabrication, installation and operation*

--`,,```,,,,````-`-`,,`,,`,`,,`---



© ISO 2002 — All rights reserved

Copyright International Organization for Standardization
Provided by IHS under license with ISO
No reproduction or networking permitted without license from IHS

Not for Resale

# Introduction

The objective of this part of ISO 14692-4 is to ensure that installed piping systems will meet the specified performance requirements throughout their operational life. Main users of the document are envisaged to be the principal, fabrication/installation contractors, repair and maintenance contractors, certifying authorities and government agencies.

© ISO 2002 – All rights reserved

Copyright International Organization for Standardization
Provided by IHS under license with ISO
No reproduction or networking permitted without license from IHS
Not for Resale

Copyright International Organization for Standardization
Provided by IHS under license with ISO
No reproduction or networking permitted without license from IHS
Not for Resale

# Petroleum and natural gas industries — Glass-reinforced plastics (GRP) piping —

Part 4:
**Fabrication, installation and operation**

## 1 Scope

This part of ISO 14692 gives requirements and recommendations for the fabrication, installation and operation of GRP piping systems for use in oil and natural gas industry processing and utility service applications. The recommendations apply to delivery, inspection, handling, storage, installation, system pressure testing, maintenance, repair and decommissioning.

It is intended to be read in conjunction with ISO 14692-1, which includes an explanation of the pressure terminology used in this part of ISO 14692.

## 2 Normative references

The following referenced documents are indispensable for the application of this document. For dated references, only the edition cited applies. For undated references, the latest edition of the referenced document (including any amendments) applies.

ISO 9712, *Non-destructive testing — Qualification and certification of personnel*

ISO 14692-1:2002, *Petroleum and natural gas industries — Glass-reinforced plastics (GRP) piping — Part 1: Vocabulary, symbols, applications and materials*

ISO 14692-2:2002, *Petroleum and natural gas industries — Glass-reinforced plastics (GRP) piping — Part 2: Qualification and manufacture*

ISO 14692-3:2002, *Petroleum and natural gas industries — Glass-reinforced plastics (GRP) piping — Part 3: System design*

API Spec 5B, 1996, *Gauging and inspection of casing, tubing, and line pipe threads*

ASTM D257, *Standard test methods for DC resistance or conductance of insulating materials*

ASTM D1599, *Standard test method for resistance to short-time hydraulic failure pressure of plastic pipe, tubing, and fittings*

## 3 Terms and definitions

For the purposes of this part of ISO 14692, the terms and definitions given in ISO 14692-1 and the following apply.

© ISO 2002 – All rights reserved

Copyright International Organization for Standardization
Provided by IHS under license with ISO
No reproduction or networking permitted without license from IHS
Not for Resale

**3.1**
**fabrication**
construction of the piping system (and pipeline) on site from either individual components and/or spool pieces

NOTE Individual components may be pipes, tees, bends, etc.

# 4 Symbols and abbreviated terms

The symbols and abbreviated terms given in ISO 14692-1 apply.

# 5 Fabrication and installation

## 5.1 Delivery, inspection and documentation of GRP piping

This part of ISO 14692 assumes that the fittings and pipes have been correctly manufactured and inspected according to the criteria given in ISO 14692-2.

The dimensions of the components and spools shall be available for the installer and operator. The quantity, qualified pressure, nominal dimensions, and relevant special requirements of all piping components and prefabricated spools shall be verified for compliance with the purchase order. Shipments of piping components not complying with the purchase order shall be reported to responsible personnel and to the pipe producer for corrective actions.

All piping components shall be visually inspected in accordance with Table A.1 for damage that may have occurred during storage and shipment. Rejected components shall be replaced. If doubts concerning the extent of defects occur during inspection, a specialist approved by the principal shall perform a second inspection of the delivered items.

Adhesive bonding kits shall be inspected to ensure that the kits contain all necessary materials, are not leaking or visibly damaged, and that at least six months remains until the expiration of shelf-life. All fire protection material shall be inspected to ensure that the original packaging is not damaged.

## 5.2 Handling and storage

The handling of the GRP components shall follow the guidelines given in Annex B and the requirements of the pipe manufacturer.

## 5.3 System design documentation

The principal shall provide the installer with the following information, which shall include but not be limited to

a) operating and design parameters:

1) design pressure;

2) design temperature;

3) $T_g$ of the resin used in component manufacture;

4) $T_g$ of the adhesive used in component manufacture (if appropriate);

5) qualified pressure of each component and minimum qualified pressure in each piping system;

6) mean and maximum velocity conditions in each piping system;


Copyright International Organization for Standardization
Provided by IHS under license with ISO
No reproduction or networking permitted without license from IHS
Not for Resale
© ISO 2002 — All rights reserved

7) chemical resistance limitations, if applicable;

8) procedures to eliminate or control water hammer and cavitation, if applicable;

9) fire classification and location of fire-rated pipe, if applicable;

10) conductivity classification, location of conductive pipe, earth linkage/grounding requirements and location of earthing points;

11) criticality;

b) system drawings and support requirements for heavy equipment;

c) preferred locations for connection of final joint in pipe loops, if appropriate;

d) system criticality and minimum requirements for inspection during installation.

## 5.4 Installer requirements

### 5.4.1 Personnel qualification

All pipe, fittings and related items shall be installed by qualified GRP pipe fitters and thereafter approved by a qualified GRP piping inspector. GRP pipe fitters and GRP piping inspectors shall be qualified according to the minimum requirements detailed in Annex D.

### 5.4.2 Health and safety

In general, all safety precautions set forth by the manufacturer of pipes and fittings, chemicals, etc., shall be adopted. Materials safety data sheets should always be read before commencing work. The installer shall follow the health and safety guidance given in Annex F.

## 5.5 Installation methods

### 5.5.1 General

Installation methods shall be agreed between the principal and the manufacturer. Copies of installation methods, procedures and quality plans shall be available on-site before work commences.

### 5.5.2 Cutting

GRP pipe of nominal diameter up to 100 mm may be cut with a hacksaw, using guides to ensure a square cut. For nominal diameters above 100 mm, an abrasive cutting disc shall be used. The squareness of the cut shall be checked. Pipe of nominal diameter up to 100 mm shall be square to within 1,5 mm. Cuts on larger pipes shall be square to within 3,0 mm. The installer should ensure that the cut end is coated with resin.

For adhesive-bonded connections, the pipe end shall be machined with a pipe shaver. Each manufacturer has specialized equipment for shaving spigots. The pipe end shall be shaved to the manufacturer's recommendations regarding angle, diameter, length and eccentricity.

### 5.5.3 Supports

GRP piping systems may be supported using the same principles as those for metallic piping systems. However, due to the proprietary nature of piping systems, standard-size supports will not necessarily match the pipe outside diameters. The use of saddles and elastomeric pads may allow the use of standard-size supports.

© ISO 2002 – All rights reserved

Copyright International Organization for Standardization
Provided by IHS under license with ISO
No reproduction or networking permitted without license from IHS
Not for Resale

The following guidelines to GRP piping support should be followed.

a) Supports in all cases should have sufficient width to support the piping without causing damage and should be lined with an elastomer or other suitable soft material.

b) Clamping forces, if applied, should be such that crushing of the pipe does not occur. Local crushing can result from a poor fit and all-round crushing can result from over-tightening.

c) In all cases, support design should be in accordance with the manufacturer's guidelines.

d) Supports should preferably be located on plain pipe sections rather than at fittings or joints.

e) Supports shall be spaced to avoid sag (excessive displacement over time) and/or excessive vibration for the design life of the piping system.

f) Valves or other heavy attached equipment shall be independently supported.

g) GRP pipe shall not be used to support other piping, unless agreed with the principal.

h) Consideration shall be given to the support conditions of fire-protected GRP piping. Supports placed on the outside of fire protection can result in loads irregularly transmitted through the coating, which can result in shear/crushing damage and consequent loss of support integrity.

i) GRP piping should be adequately supported to ensure that the attachment of hoses at locations such as utility or loading stations does not result in the pipe being pulled in a manner that could overstress the material.

The anchor support shall be capable of transferring the required axial loads to the supporting structure without causing overstress of the GRP pipe material.

Anchor clamps are recommended to be placed between two double 180° saddles, adhesive-bonded to the outer surface of the pipe. The manufacturer's standard saddles are recommended and shall be bonded using standard procedures.

### 5.5.4 Installation

#### 5.5.4.1 General requirements

The requirements for the handling of piping components are identical to those given in 5.2. Before installation, all piping components shall be inspected for damage as described in 5.1.

All piping components shall as far as possible be installed so that they are stress-free; therefore:

a) bending of pipes to achieve changes in direction, or forcing misaligned flanges together by over-torquing bolts is not permitted;

b) the manufacturer's recommendations for bolt-torquing sequence, torque increments and maximum bolt torque shall be followed.

Prefabricated pipework shall be fabricated in accordance with fully dimensioned piping isometrics. Overall spool dimensions shall be sized taking the following into consideration:

a) site transport and handling equipment limitations;

b) installation and erection limitations;

c) limitations caused by the necessity to allow a fitting tolerance for installation ("cut-to-fit" requirements).


Copyright International Organization for Standardization
Provided by IHS under license with ISO
No reproduction or networking permitted without license from IHS
Not for Resale
© ISO 2002 — All rights reserved

If shown on isometric drawings, the fabrication shall include “cut-to-fit” lengths and field joints on fabricated pieces to allow for the setting up of pipework accurately on-site between fixed points. The “cut-to-fit” dimension shall be 150 mm of pipe additional to the length shown on the piping drawings. For hook-up spools, the “cut-to-fit” dimension shall be a minimum of 250 mm in each global direction. “Cut-to-fit” lengths shall be left square and plain.

The installer shall give due consideration to the following:

a) the need to avoid overstressing of GRP components by the forced pulling of GRP pipework to facilitate alignment at joints, and particularly at flanged joints;

b) the need to ensure that valves or other heavy attached equipment are independently supported;

c) the need to prevent damage to joints when handling small-diameter thick-walled pipe, e.g. due to fire protection;

NOTE This is because the high rigidity of the pipe concentrates loading at the thinner sections of pipe wall adjacent to the joint.

d) the preferred location of the last site joint in a piping loop to ensure that necessary access is available, since this joint is often the most difficult to complete;

e) delays caused by the time required for adhesive and laminated joints to cure without being disturbed. The scheduling of surrounding construction activities shall take into account the risk of possible disturbances to such joints;

f) the need to provide temporary protection for installed GRP piping if risk of mechanical damage is high. The installer shall also consider correct sequencing of fabrication activities to minimize risk of damage;

g) the need to prevent overheating of the GRP pipe material by electric surface heating, if applied. Heat tracing should be spirally wound onto GRP pipe in order to distribute the heat evenly around the pipe wall. Heat distribution can be improved if aluminium foil is first wrapped around the pipe. Care shall be taken that the tracing is not wound too tightly onto the pipework or it may be damaged when the pipe expands;

h) provision of suitable joints to facilitate isolation or access to the pipe for maintenance purposes.

High levels of supervision and inspection shall be adopted for piping which will be difficult to repair on site (e.g. ballast lines due to be cast in concrete, and piping in ballast water tanks).

#### 5.5.4.2 Components fabricated on-site

All processes used to fabricate spoolpieces and components on-site, e.g. mitred elbows and laterals, shall have been qualified according to procedures given in 6.2.3.3 of ISO 14692-2:2002.

#### 5.5.4.3 Tolerances

Global tolerances shall be within ± 6 mm in all directions, unless otherwise shown on the approved drawings. Dimensional tolerances for finished piping are given in Table 1. The dimension numbers are shown in Figure 1.

The acceptable tolerances for misalignment of flanges during installation are given in Table 2. It is common practice for some flanges to be manufactured with bolt holes larger than the size of bolt being used with the flange. Typically, the hole will be 3 mm larger. This should be taken into account when assessing the flange misalignment tolerance in Tables 1 and 2.

© ISO 2002 – All rights reserved

Copyright International Organization for Standardization
Provided by IHS under license with ISO
No reproduction or networking permitted without license from IHS
Not for Resale

**Table 1 — Maximum dimensional tolerances**

| Internal pipe diameter | **Tolerances** (relative) **Dimension number** (see Figure 1) | | | | | |
|---|---|---|---|---|---|---|
| | **1** | **2** | **3** | **4** | **5** | **6** |
| mm | mm | mm | degrees | mm | mm | degrees |
| 25 to 200 | ± 5 | ± 3 | ± 0,5 | ± 3 | ± 1 | ± 0,5 |
| 250 to 300 | ± 5 | ± 3 | ± 0,3 | ± 3 | ± 1 | ± 0,5 |
| 350 to 400 | ± 5 | ± 3 | ± 0,3 | ± 3 | ± 2 | ± 0,5 |
| 450 to 600 | ± 10 | ± 5 | ± 0,3 | ± 3 | ± 2 | ± 0,5 |
| 700 to 900 | ± 10 | ± 5 | ± 0,2 | ± 4 | ± 3 | ± 0,5 |
| 1 000 to 1 200 | ± 10 | ± 5 | ± 0,15 | ± 6 | ± 3 | ± 0,5 |
| The maximum gap shall be limited to 6 mm. | | | | | | |

**Table 2 — Acceptable tolerances for misalignment of flanges during installation**

Dimensions in millimetres

| Misalignment | **Tolerances** | |
|---|---|---|
| | **Diameter range** | |
| | **50 to 300** | **300 to 1 200** |
| Flange misalignment | ± 1,6 | ± 3,2 |
| Separation between spools | ± 1 | ± 1 |

### 5.5.4.4 Electrical conductivity and electrostatic dissipative properties

If electrical conductivity requirements are specified, the installer shall verify the electrical conductivity and/or earth linkage of the piping as it is installed according to the requirements documented by the system designer (see 5.3).

The installer shall measure one or more of the following properties as required:

a) continuity along the component between earth-bonding points;

b) maximum resistance to earth from a point on the inside of the pipe;

c) maximum resistance to earth from a point on the outside of the pipe or the fire-protective coating or thermal insulation cladding;

d) maximum resistance to earth of metal components located on the pipe;

e) recommended maximum distance between earthing points, based on the conductivity properties of the pipe system;

f) maximum surface resistivity on the outside of the pipe or the fire-protective coating or thermal insulation cladding;

g) charge-shielding properties of the pipe;

h) charge-decay properties of the outside surface of the pipe or the fire-protective coating or thermal insulation cladding.


© ISO 2002 — All rights reserved
Copyright International Organization for Standardization
Provided by IHS under license with ISO
No reproduction or networking permitted without license from IHS
Not for Resale

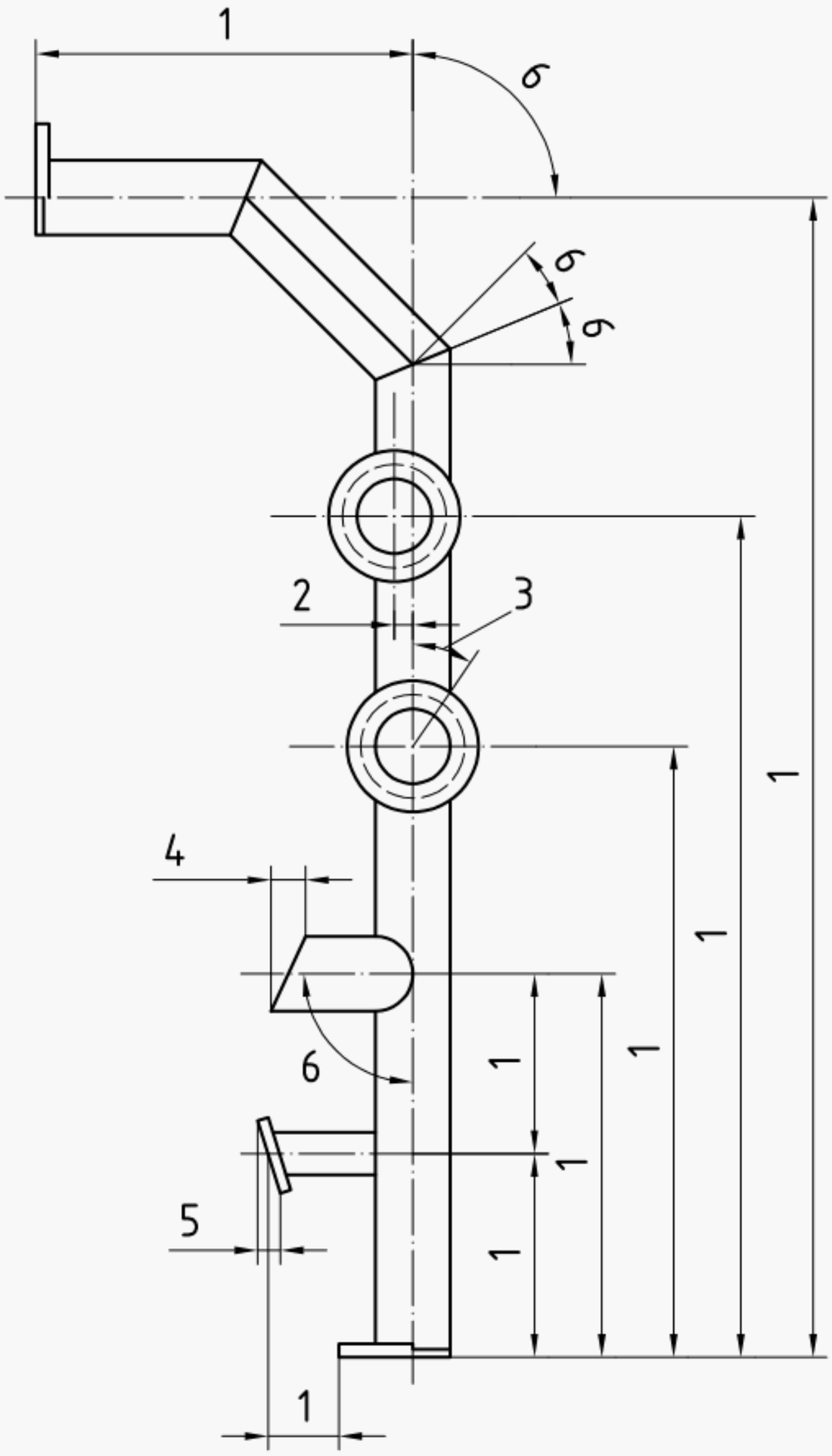


**Key**

1 face-to-face dimensions, or centre-to-face dimensions, or location of attachments, or centre-to-centre dimensions

2 lateral translation of branches or connections

3 rotation of flanges, from the indicated position

4 end preparations

5 cut of alignment of flanges from the indicated position, measured across the full gasket face

6 angular deflection

**Figure 1 — Toleranced dimensions**

The installer shall take into account the manufacturer's recommended methods for applying earth-grounding straps and ensuring reliability of the conductivity path and/or earth bonding during installation and service.

If required, and after ensuring the inside and outside of the pipe are dry, the resistance at a point on the surface or earth-bonding point shall be measured using a suitable megohmmeter with a minimum scale division of less than $1 \times 10^6\ \Omega$. The voltage should preferably not be more than 1 500 V.

© ISO 2002 — All rights reserved

Copyright International Organization for Standardization
Provided by IHS under license with ISO
No reproduction or networking permitted without license from IHS
Not for Resale

A voltage may be used which is higher than that used for qualification (100 V), to enable advantage to be taken of possible voltage breakdown of the resin coating for the in-service component, which may reduce the resistance to earth.

Electrical contact with the pipe shall be with a suitable electrode and shall be connected with the megohmmeter. The electrode shall provide the necessary conductivity to the surface of the pipe without abrading the material to achieve better electrical contact, unless required as part of the installation procedure, for example to apply an earth-grounding strap to the pipe.

Examples of means of electrical contact include conductive paints, conductive adhesive tape and brine-soaked sponges held in place with clamps. The resistance to earth shall be less than the value specified in the system design documentation (see 5.3). On completion of the tests, all conductive materials used for testing that have been applied to pipes that do not already have or cannot achieve a C2b classification shall be completely removed, e.g. conductive adhesive tape. Conductive materials applied to pipes with a C2b classification should preferably also be removed.

NOTE 1 Removal is to prevent such materials acting as isolated electrical conductors on the surface of the pipe.

If conductivity is provided by an embedded network of conducting elements within the wall of the component, the installer shall verify that there is electrical continuity along the component between earth-bonding points.

If conductivity is provided by use of an external conductive paint, the installer shall verify that the coating is continuous between earth-bonding points. The conductivity (ohms per metre) and resistance to earth (ohms) shall be less than the values specified in the system design documentation (see 5.3).

If required, and after ensuring the outside of the pipe is dry, the surface resistivity shall be measured in accordance with ASTM D257 and shown to be less than $1 \times 10^9\ \Omega$.

If required, and after ensuring the outside of the pipe is dry, the charge-decay properties shall be measured in accordance with 6.6.3.4 of ISO 14692-2:2002.

If required, and after ensuring the outside of the pipe is dry, the charge-shielding properties shall be measured in accordance with 6.6.3.3 of ISO 14692-2:2002.

NOTE 2 The charge-shielding test can be impractical in some situations because of the high voltage required.

If required, the installer shall coat the piping with a suitable conductive paint to provide the necessary electrical conductivity. The maximum size of uncoated area, in regions on the pipe that are intended to be painted, shall not be more than 100 $cm^2$. The coating shall be effective over the design life and shall not be impaired by normal service, handling or installation. The installer shall provide evidence of the durability of the coating.

The conductive coating should preferably be applied after hydrotesting, to facilitate inspection of possible leaks. Before the coating is applied to any piping components, the surfaces shall be free from moisture, grease or any other contaminants. The coating shall be continuous between earthing points, with no isolated patches.

If the GRP is coated with a conductive paint, there shall be a reliable electrical bond between the pipe and metal objects attached to the pipe, for example deluge nozzles and support hangers. Reliance should not be placed on the integrity of paint applied over a fitting, since a crack in the paint may result in the formation of an isolated conductor. In these situations, an independent means of providing a good conductive path between the pipe and support is necessary.

#### 5.5.4.5 Earthing

If an electrostatic hazard is reported in the documentation provided by the system designer, the contents of the pipes shall be directly connected to earth by at least one exposed earthing point on the inside of the system.


© ISO 2002 — All rights reserved
Copyright International Organization for Standardization
Provided by IHS under license with ISO
No reproduction or networking permitted without license from IHS
Not for Resale

The location and/or maximum distance between earthing points shall be determined from the documentation provided by the system designer.

### 5.5.5 Fittings fabricated on-site

It is permissible to fabricate fittings, e.g. tee pieces and elbows, on-site, provided that

a) lamination procedures are qualified according to 6.2.3.3 of ISO 14692-2:2002 using raw materials, lamination techniques, curing schedules, etc., as applicable, during on-site fabrication,

b) the piping system is designed to operate at a pressure less than that given in Table 3. The use of higher pressures shall be in agreement with the principal.

**Table 3 — Low-pressure as a function of diameter**

| Diameter<br>mm | Design pressure<br>MPa (bar) |
|---|---|
| 25 to 600 | 0,8 (8) |
| 600 to 1 200 | 0,4 (4) |
| > 1 200 | 0,2 (2) |

### 5.5.6 Jointing

#### 5.5.6.1 Joint selection

Various types of bonded and mechanical joints are available. These are proprietary but can be categorized into the following types:

a) adhesive-bonded joints;

b) laminated joints;

c) elastomeric seal joints (with/without locking strips);

d) flanged joints;

e) other mechanical joints;

f) metallic/GRP interfaces;

g) threaded joints.

All jointing shall be performed in accordance with the manufacturer's recommendations. The selection of joint site shall take into account the following:

— the ease of access required by fitters to assemble the connection correctly;

— the need to accommodate possible minor misalignments.

If adhesive joints are used, the installer shall ensure that the adhesive bead which is created when the joint is made up does not protrude significantly into the bore of the pipe. Such a protrusion can create a substantial blockage factor as well as a source for erosion and cavitation damage. The height of adhesive bead shall be such that the maximum flow obstruction is 5 % of the inner diameter or 10 mm, whichever is smaller.

Guidance on the assembly of joints is given in Annex C.

© ISO 2002 — All rights reserved

Copyright International Organization for Standardization
Provided by IHS under license with ISO
No reproduction or networking permitted without license from IHS
Not for Resale

#### 5.5.6.2 Quality control of adhesive and laminated jointings

If so required by the principal, the following requirements shall be included for installation.

a) The frequency of testing shall be agreed between the installer and the principal.

b) The adhesive or resin used shall be in accordance with the manufacturer's recommendation and its degree of cure shall be determined according to the requirements given in 6.8.2 of ISO 14692-2:2002.

c) The adhesive or resin shall be applied at a temperature of at least 23 °C and a relative humidity of less than 75 %.

For epoxy-based products, the glass transition temperature $T_g$ of the cured adhesive or resin shall not be less than 95 % of the minimum value quoted by the manufacturer for the adhesive or resin system.

For polyester- and vinyl ester-based products, the residual styrene monomer content for joints shall be determined by measuring on a dummy joint made up prior to starting the jointing work. The styrene content shall be less than or equal to 2 % (mass fraction) of the resin content.

The Barcol hardness shall be measured on all laminated joints. It is recommended that a minimum of ten readings be taken on each sample. The two highest and two lowest readings may be discarded, with the remaining six to be used to calculate an average reading which shall not be less than 90% of the minimum value measured on the baseline component.

If an alternative method has been used to determine the baseline for degree of cure, then the acceptance criteria for quality control shall be agreed with the principal.

### 5.5.7 Application of fire-protective coating

On-site application of fire-protective coating should be limited to that necessary for installation purposes (e.g. joints). The coating should preferably be applied after hydrotesting, to facilitate inspection of possible leaks.

The application of fire-protective materials to meet requirements concerning either flame spread, smoke or toxicity shall be integral to the pipe construction. On-site application of such material shall be limited to that required for installation purposes, e.g. field joints.

If a fire-protective coating is used for the sole purpose of meeting the fire endurance requirements, the pipes may be coated on-site in accordance with the approved procedure for each combination, using the materials approved for both pipes and insulation, subject to on-site inspection and verification.

All fire protection applied to piping components, whether the work is performed at a location offshore or in a prefabrication shop onshore, shall be subjected to the following requirements.

a) The contractor, if used, for fire protection application shall have a quality management system and shall in addition have written application procedures, covering environmental control, application and inspection aspects, which are approved by the principal.

b) The following methods are acceptable for applying or covering piping components with fire protection:

   1) conventional hand application,

   2) automated process;

   3) use of moulded half-shells or sections of different shapes and lengths.


© ISO 2002 — All rights reserved
Copyright International Organization for Standardization
Provided by IHS under license with ISO
No reproduction or networking permitted without license from IHS
Not for Resale

c) Before initiating fire-protection work on piping components, the contractor's personnel intending to apply the fire insulation material shall:

   1) have received training both in the application method and actual application of the fire-protection materials under the instruction of the fire-protection manufacturer,

   2) have applied fire protection to a sample pipe and fitting that is approved by the fire-insulation manufacturer and by the principal.

The contractor shall use application equipment recommended by the fire-protection manufacturer. Before fire-protection material is applied to any piping components, the surfaces shall be free from moisture, grease or any other contaminants.

After the fire-protection material is applied to piping components, an inspection of the fire protection shall be carried out to approve or reject the work. Inspection shall include the following aspects.

— The fire-protection thickness shall be randomly measured in a wet or cured state; the thickness shall not be less than the minimum required thickness.

— Both the finish and the appearance of the fire protection shall be of the same quality as the sample submitted for approval by the fire-insulation manufacturer and the principal.

— If the fire-protection thickness, appearance or finish are of inadequate quality, the principal may require the section to be repaired or replaced.

In fire-protection applications where the protection is to be removable for inspection purposes, e.g. valves and flanges, one of the following situations shall apply:

— the fire protection shall be inside or outside a box or other container so as to provide structural integrity; or

— a complete structural reinforcing mesh integrated in the fire-protection material shall be used.

### 5.5.8 Quality programme for installation

The contractor shall maintain a high level of inspection to ensure compliance with all requirements of this part of ISO 14692, and shall have a quality management system.

The contractor shall designate one individual, experienced in all aspects of GRP piping field fabrication, to be responsible for quality control throughout the installation of the GRP piping system.

Quality control shall be based on the implementation of

— records of adhesive and lamination jointing procedure qualification,

— requirements by the principal for inspection of all types of joints used,

— inspection register for all types of joints used,

— inspection of finished fabricated pipework for compliance with design drawings, within tolerances as detailed in 5.5.4.3.

For quality assurance and quality control during the installation phase, the principal shall have the right to inspect the ongoing work as well as inspect the contractor's quality control routines.

Each connection shall be permanently marked for identification purposes. A log book containing key values relevant for the bonding process shall be maintained. The key values are the following:

a) date;

--`,,```,,,,`````-`-`,,`,,`,`,,`---

© ISO 2002 – All rights reserved



Copyright International Organization for Standardization
Provided by IHS under license with ISO
No reproduction or networking permitted without license from IHS
Not for Resale

b) temperature and relative humidity;

c) connection identification number;

d) electrical continuity and resistance to earth if appropriate;

e) curing temperature and time;

f) signature of pipe fitter and inspector;

g) bolt torque.

Each site and field joint between pipes, fittings, or flanges, shall be inspected by an approved inspector as defined in 5.4.1. A log book sheet shall be filled in for each joint. Inspection sheets shall be retained as long as the piping is in service.

It is recommended that the principal carry out hydrotesting of representative site-fabricated joints and fittings soon after the start of installation to verify the standard of workmanship. This is particularly important for pipe diameters above about 200 mm.

## 5.6 System testing

### 5.6.1 Flushing

On completion of installation, GRP piping systems shall be flushed. The medium used for flushing shall be seawater or fresh water. All lines requiring a pressure test shall be flushed prior to testing. Systems that are open to atmosphere and do not require pressure testing shall be flushed to ensure that the lines are not restricted.

Flushing should preferably be carried out at temperatures above 7 °C. When flushing with fresh water in sub-zero temperatures, precautions shall be taken to avoid freezing of the water in the piping system, i.e. the water should be continually circulating, or glycol antifreeze added, or the system should be drained for the duration of sub-zero temperatures.

### 5.6.2 Pressure testing

#### 5.6.2.1 General

All closed GRP piping systems shall be hydrostatically pressure-tested after installation. Preferably, the system should be installed such that smaller parts of a system can be pressure-tested separately and at the earliest opportunity during construction.

NOTE Early testing avoids having a pressure test of the entire system late in a project phase, when joint failures could have a schedule impact on project completion.

Systems that are open to atmosphere (e.g. drains) shall be subjected to a hydrostatic leak test, and may require a full hydrostatic pressure test if they could be subject to system pressure.

#### 5.6.2.2 Preparation

A formal risk assessment should be carried out prior to the hydrotest. All supports, guides and anchors shall be in place prior to pressure testing. Temporary supports and restraints shall be added if required. Unless stated otherwise, all valves shall be through-body tested. Piping containing check valves shall have the source of test pressure located on the downstream side. All adhesive-bonded joints and all laminated joints shall be fully cured prior to pressure testing. Threaded connections and the bolts of flanged joints shall be made up to the correct torque prior to pressure testing.


© ISO 2002 — All rights reserved
Copyright International Organization for Standardization
Provided by IHS under license with ISO
No reproduction or networking permitted without license from IHS
Not for Resale

#### 5.6.2.3 Testing

Water shall be admitted at a low point in the system and provision shall be made for bleeding the air at high points (e.g. by loosening of flange connections). Any compressed air in the system may give erroneous results. Removal of air pockets prevents damage to piping and personnel in the event of an unexpected failure during the pressure test.

The test pressure shall be raised over a period of 30 min or longer to 1,5 times the design pressure or 0,89 times the qualified pressure, whichever is lower.

NOTE 0,89 is the $f_2$ factor for occasional loads, see 7.6.2.2 in ISO 14692-3:2002.

Any sudden increase in pressure shall be avoided for GRP pipework. The pressure-decay test shall be conducted for a minimum of 1 h. A further leak test, at 1,1 times the design pressure, should also be carried out for a minimum of 24 h.

The following factors influence the choice of test duration:

a) effect of joint expansion and material creep, particularly when long runs of pipe are being tested;

b) water uptake properties of the GRP material, e.g. phenolic materials.

c) effect of temperature. This is more noticeable when testing is being carried out in a hot or cold climate and if relatively large changes in temperature may occur during the course of the test.

Additional checks shall be carried out after this time has elapsed, by visual inspection of the complete piping system. Any leaking or weeping shall constitute a defect, and the test shall be terminated and a repair effected. The test procedure shall then be repeated. Over-torquing of flanges to stop leaks shall not be permitted. Leaking flanges shall be remade with new gaskets and retested. If leakage still occurs, flanges shall be replaced.

The system shall be considered to have passed the hydrotest if there is no leaking or weeping of water from the piping and there is no significant pressure loss that cannot be accounted for by usual engineering considerations, e.g. thermal expansion of pipe, or other factors previously agreed with the principal.

#### 5.6.2.4 After completion of test

Gaskets at flanged joints which have been broken for testing shall be renewed, unless otherwise agreed with the principal.

### 5.7 Inspection

Visual inspection, both internally (as far as physical access allows) and externally, shall be carried out of all joints and all surfaces. An illumination source, mirrors and other suitable aids shall be used to maximize the extent and accuracy of the visual inspection. Possible defects along with acceptance criteria and corrective actions are listed in Table 4. Further information concerning defects arising during fabrication and installation, and corrective action, are given in Table A.1. Further guidance on defect detection using NDE/NDT methods is given in Annex E. The presence of a uniform fillet of adhesive is an indicator that an adhesive joint has been assembled correctly.

Details of repair methods for use during the fabrication and installation phase are described in 5.9.2.

© ISO 2002 – All rights reserved

Copyright International Organization for Standardization
Provided by IHS under license with ISO
No reproduction or networking permitted without license from IHS
Not for Resale

**Table 4 — General description of defects potentially occuring during fabrication, handling and installation**

| Possible defects | Cause(s) | Consequence(s) | Recommended NDT method(s) | Criteria | Corrective action |
|---|---|---|---|---|---|
| Incorrect dimensions | Incorrect prefabrication<br>Joint not shaved correctly | Joint cannot be sealed, leakage<br>GRP can be overstressed if joint pulled up | Measurement to verify documented dimensions | In accordance with 6.8.5 of ISO 14692-2:2002 | Replace (major defect)<br>Compensate elsewhere in piping system (e.g. use field joints, hook-up adjustments etc.) |
| Impact, wear or abrasive damage | Incorrect transport<br>Incorrect handling | Weepage or pipe failure | Visual inspection, with light source inside pipe | In accordance with Table A.1 | Replace (major defect)<br>Repair (minor defect) |
| Incorrect curing of<br>-adhesive<br>-laminated joint | Outside temperature and humidity specifications<br>Improper mixing<br>Heating pad overlap or controller problems<br>Cooling effect of air in pipe<br>Out-of-date or incorrect materials | Weakened joint or leakage | In accordance with 8.3.3 of ISO 14692-2:2002 | In accordance with 8.3.3 of ISO 14692-2:2002 | Remake joint (major defect)<br>Post-cure joint (minor defect) |
| Misaligned joints | Movement during curing<br>Bending<br>Incorrect dimensions | Air sucked in, resulting in voids<br>Residual stress, resulting in less than rated performance | Visual inspection<br>Ultrasonics | Alignment to project specifications | Replace components (major defect)<br>Remake joint (minor defect) |
| Defects in adhesive bond | Too little adhesive or not applied uniformly<br>Movement during curing | Weakened joint or leakage | Ultrasonics, or<br>Radiography | Debond area greater than 30 % of total bond area<br>Axial length of debond area greater than 20 % of total axial bond length | Remake joint |
| Improper treatment of joint adherents | Contaminated surface after grinding | Weakened joint or leakage | Visual inspection | In accordance with adhesive supplier's requirements | Remake joint |
| Excess adhesive | Too much adhesive applied | Restriction in pipe to flow<br>Increased risk of erosion damage of pipe | Radiography | No flow obstruction<br>5 % of inner diameter or 10 mm, whichever is less | If access: remove by careful grinding<br>If no access: reject/major repair |
| Damaged threads | Teeth chipped<br>Damaged end faces | Joint cannot be sealed, leakage | Visual inspection | In accordance with Table A.1 | Replace thread in accordance with supplier's guideline |


© ISO 2002 — All rights reserved
Copyright International Organization for Standardization
Provided by IHS under license with ISO
No reproduction or networking permitted without license from IHS
Not for Resale

## 5.8 Certification and documentation

### 5.8.1 Flushing certificate

Upon completion of flushing, a flushing certificate delineating the flushing boundary limits shall be endorsed by the principal. As one flush may extend over more than one pressure or leak test, the flushes shall be numbered separately and cross-referenced on applicable test isometric drawings. A copy of the completed flushing certificate shall be incorporated into the relevant test packs.

### 5.8.2 Pressure test certificate

Upon completion of successful testing, a pressure test certificate showing the limits of the test shall be endorsed by the principal and incorporated into the relevant test pack.

## 5.9 Repair after installation

### 5.9.1 General

Rejected components shall in general be replaced by the manufacturer. After the pipe spools are installed, repair can be an alternative to replacement.

### 5.9.2 Repair methods

#### 5.9.2.1 Replacement

Pipe sections with major damage shall be replaced in accordance with procedures qualified in 6.2.2 of ISO 14692-2:2002. All replacement work shall be performed according to the methods and requirements covered in 5.5. Pipe fitter qualification requirements for the replacement of piping shall be identical to those for the installation of the original pipework as defined in 5.4.1. Flanges with major cracks shall be replaced.

#### 5.9.2.2 Minor repairs

Minor repairs to pipe and fittings may be repaired on-site. Any damaged outer layer shall be ground and cleaned, and resin/hardener mix applied as recommended by the manufacturer. It is permissible to repair flanges by grinding and filling minor cracks with resin.

#### 5.9.2.3 Approval of repair method

The repair methods shall be approved by the manufacturer and the principal.

# 6 Operations

## 6.1 Operator's documentation

### 6.1.1 Documentation elements

The principal shall provide the operator with the following information, which shall include but not be limited to

a) operating and design parameters, see 6.1.2,

b) system drawings, see 6.1.3,

c) system criticality and requirements for inspection during operation, see 6.1.4,

d) additional repair and hydrotest procedures if applicable, including health and safety precautions.

© ISO 2002 – All rights reserved

Copyright International Organization for Standardization
Provided by IHS under license with ISO
No reproduction or networking permitted without license from IHS
Not for Resale

The documentation shall focus on any consequences for maintenance, and shall be maintained over the design life of the GRP system.

### 6.1.2 Operating and design parameters

#### 6.1.2.1 General

These shall include

a) design pressure,

b) design temperature,

c) $T_g$ of the resin used in component manufacture,

d) $T_g$ of the adhesive used in component manufacture (if appropriate),

e) qualified pressure of each component and minimum qualified pressure in each piping system,

f) mean and maximum velocity conditions in each piping system,

g) chemical resistance limitations, if applicable,

h) procedures to eliminate or control water hammer and cavitation, if applicable,

i) fire rating, see 6.1.3,

j) electrical conductivity and earthing requirements, see 6.1.3,

k) criticality.

Short-term excursions above the maximum normal operating temperature and pressure shall be acceptable in certain circumstances. The following limits shall not be exceeded:

— not above 30 °C below the $T_g$ of the resin for 1 h;

— pressure up to the qualified pressure $p_q$ for 1 h.

If these limits are exceeded, the principal should carry out a visual inspection of the system and closely monitor the system for a minimum of three months.

#### 6.1.2.2 Impact damage

GRP piping is susceptible to damage at lower levels of energy than steel. Such damage may result in resin cracking and delamination damage, which causes weepage of fluid through the pipe wall. If the site of the impact damage is on the parent pipe material, research has shown that the damage is generally non-propagating and results in little loss of structural strength. For water-service applications, e.g. firewater, it may be acceptable to delay repair until a convenient shutdown period. There is a far greater risk of abrupt failure if the source of leakage is a joint. This is because there may be no direct load transfer by fibres such that the strength of the joint is reliant on the integrity of the resin or adhesive interface.

#### 6.1.2.3 Pipe taken out of service

The operator shall assess the change in fire performance of GRP piping that is no longer in service, and take precautions to ensure that the integrity of the fire-rated penetration is maintained in the event of a fire, for example by the removal of the pipe or the addition of fire-protective coating.


© ISO 2002 — All rights reserved
Copyright International Organization for Standardization
Provided by IHS under license with ISO
No reproduction or networking permitted without license from IHS
Not for Resale

NOTE The ability of the GRP pipe to survive and continue to function in a fire is in part due to the cooling effect of liquid flowing inside the pipe. The cooling effect is not present if a pipe is empty and no longer in service. Such pipe may not meet the original design endurance requirements, and could cause spread of fire, smoke and toxicity where it penetrates a fire-rated wall.

#### 6.1.3 System drawings

All relevant as-built drawings and records shall be available and maintained. It is recommended that as a minimum these include the following details:

a) pipe nominal diameters and pipe wall thicknesses;

b) key layout dimensions;

c) location of supports/restraints;

d) fire classification and location of fire-rated pipe, if applicable;

e) conductivity classification, location of conductive pipe, location of earth-grounding points, earth continuity requirements, frequency and method of inspection.

#### 6.1.4 Inspection strategy

The principal shall provide the operator with an inspection strategy to identify system criticality and the requirements for inspection. GRP piping systems shall be inspected at regular intervals, in accordance with the inspection strategy, to ensure that the piping system is in a satisfactory state consistent with its continued operation. Further information about possible defects is given in Table A.1. NDE methods recommended for use in detecting defects which are most likely to occur during operation of GRP piping systems are given in Table 5 along with recommended acceptance criteria. Possible causes and recommended corrective actions are also included.

### 6.2 Maintenance and repair

#### 6.2.1 Maintenance

##### 6.2.1.1 General

GRP pipes are generally maintenance-free, but the following points shall be given attention during inspection.

##### 6.2.1.2 Removal of scale and blockages

Care shall be taken in the use of conventional methods for removal of scale and other blockages (e.g. high-pressure water lances, mechanical and chemical cleaning methods). The manufacturer's recommendations shall be followed in all cases.

##### 6.2.1.3 Electrical conductivity and electrostatic dissipative properties

Earthed GRP piping systems shall be periodically checked to ensure that all earthing leads are functional and that the requirements for continuity of electrical path and the resistance to earth are not greater than the specification given in the operator's documentation, see 6.1.2. The testing of resistance to earth shall be in accordance with 5.5.4.4.

© ISO 2002 – All rights reserved

Copyright International Organization for Standardization
Provided by IHS under license with ISO
No reproduction or networking permitted without license from IHS
Not for Resale

**Table 5 — General description of defects that could potentially occur during operation**

| Operational defects | Cause(s) | Consequence(s) | Recommended NDE method(s) | Criteria | Corrective action |
|---|---|---|---|---|---|
| Flange cracks, leaks | Bolts over- or under-torqued<br>GRP against raised-face flanges<br>Wrong GRP flange design selected | Joint not sealed, leakage<br>Reduced life | Visual inspection | No leakage permitted | Replace flange (major defect)<br>Grind and fill minor cracks with resin |
| System failure, e.g. burst pipe | Design conditions, loads, temperatures exceeded<br>Operational procedures inadequate (e.g. water hammer due to valve opening) | System failure | Visual inspection | No failure permitted | Replace |
| Ageing | Long-term materials degradation | Weepage | Ultrasonics | More than 20 % reduction in original axial modulus | Accept, but monitoring required |
| Impact damage | Impact e.g. from dropped scaffolding, tools | Weepage | Visual inspection<br>Ultrasonics | In accordance with Table A.1 | Replace (major defect)<br>Temporary repair (minor defect) |
| Earthing cable damage | Some cables susceptible to corrosion in marine atmosphere | Earthing reduced or eliminated | Visual inspection<br>Megohmmeter | None permitted | Replace cables |
| Scale deposits (salt water systems only) | Operating conditions resulting in e.g. barium sulfate deposits | Reduced flowrate | Visual (reduced flow)<br>Radiography | Reduction in internal diameter of more than 10 mm or 5 % | Clean using e.g. water jetting |
| Erosion | Particulates in flow | Reduction in wall thickness leading to pipe weepage | Ultrasonics | Reduction in original wall thickness of less than 20 %<br>Reduction in original wall thickness of more than 20 % | Accept, but monitoring required<br>Reject |
| Chalking | Exposure to UV radiation | Minor breakdown of outer surface | Visual inspection | Depth limited to surface resin layer | Accept |

If conductive paint has been applied to the outside of the pipe, the condition of the coating shall be inspected. The maximum uncoated area on the painted surface shall be 100 $cm^2$. If coating has peeled away from the pipe, the coating shall be replaced in accordance with 5.5.4.4 unless the following conditions can be met:

— the pipe can be shown to achieve a C2b classification if tested in accordance with 6.6.3.1 of ISO 14692-2:2002 and agreed with the authority having jurisdiction;

— the pipe can be shown to achieve a C5 or C6 conductivity classification, i.e. surface resistivity or charge-decay properties, if tested in accordance with 6.6.3.5 and 6.6.3.4 of ISO 14692-2:2002, respectively and agreed with the authority having jurisdiction.

NOTE Prolonged exposure to a marine environment can result in a significant increase in the natural electrical conductivity of the GRP piping components.


© ISO 2002 — All rights reserved
Copyright International Organization for Standardization
Provided by IHS under license with ISO
No reproduction or networking permitted without license from IHS
Not for Resale

The frequency and method used to carry out inspection of earth-bonding points and coating integrity, if applicable, shall be in accordance with recommendations given in the operator's documentation, see 6.1.2.

#### 6.2.1.4 Surface and mechanical damage

GRP pipe is susceptible to the following types of damage:

a) breakdown of outer surface (chalking) due to inadequate UV protection, which might result in loose fibres;

b) breakdown of outer surface due to weld splatter and abrasion;

c) impact damage;

d) cracks in flanges caused by overtorqued bolts or incorrect flange design;

e) excessive pressure transients, e.g. water hammer.

The damage shall be assessed in accordance with 6.1.4 and 6.2.2.

### 6.2.2 Damage/repair evaluation

Guidance concerning defects and advised corrective action is given in Annex A.

### 6.2.3 Fitter and inspector qualification

The pipe, fittings and related items involved in the applications listed below shall be repaired or replaced by qualified GRP pipe fitters and thereafter approved by a qualified GRP piping inspector:

a) critical applications;

b) applications involving a hazardous fluid;

c) applications involving operation at a pressure greater than the design pressure given in Table 3.

Approval shall be equivalent to fulfilment of the requirements detailed in 5.4.1.

The level of qualification of fitters and inspectors for other applications shall be at the discretion of the principal.

### 6.2.4 Health and safety

The requirements given in 5.4.2 shall apply.

## 6.3 Repair methods

### 6.3.1 General

The method of repair shall be in accordance with 6.2.2. The repair procedure shall be produced and qualified by the contractor in accordance with the GRP pipework manufacturer's recommendations and reviewed by the principal prior to implementation. It shall be demonstrated that the repair method restores the specified properties. Test methods (if appropriate) shall be agreed between the principal and manufacturer. Areas and number of repairs shall be reported and recorded. No repairs shall be made to the internal surface.

© ISO 2002 – All rights reserved

Copyright International Organization for Standardization
Provided by IHS under license with ISO
No reproduction or networking permitted without license from IHS
Not for Resale

In addition to a practical assortment of spare pipes and fittings, an emergency repair kit shall be available and stored at the facility. Suitable repair kits may be available from the manufacturer. Recommended kit contents to repair both adhesive-bonded and laminated joints include

a) instructions,

b) measuring tape, sliding gauge, pipe marker,

c) temperature and relative humidity measurement instruments,

d) light strap winch and pipe clamps,

e) right-angled grinding tool with cutting and coarse-grinding discs,

f) flexible support disc and grinding disc,

g) pipe shaver,

h) adhesive kits,

i) resin, hardener, glass-reinforcement, mat and woven roving,

j) heating collar,

k) solvent cleaner, cleaning rags,

l) dust mask.

### 6.3.2 Replacement

Pipe sections with major damage shall be replaced. All replacement work shall be performed according to the methods and requirements covered in 5.5. Pipe fitter qualification requirements for the replacement of piping shall be identical to those for the installation of the original pipework, 5.4.1.

If possible, all fabricated spoolpieces produced beforehand shall be pressure-tested before being installed.

### 6.3.3 Minor repairs

Minor repairs to pipe and fittings may be carried out on-site in accordance with the manufacturer's recommended procedures.

### 6.3.4 Temporary repair

Temporary repairs may be carried out as agreed by the principal, the material manufacturer and the repair kit manufacturer. A range of techniques are available which include, but are not limited to, adhesive-bonded saddles, laminated overwraps, tape overwraps or clamps.

The principal shall assess the suitability of these techniques according to the criticality of application and reliability of repair.


© ISO 2002 — All rights reserved
Copyright International Organization for Standardization
Provided by IHS under license with ISO
No reproduction or networking permitted without license from IHS
Not for Resale

### 6.3.5 Quality programme for repair and maintenance

The requirements shall be the same as 5.5.8. Each repair shall be permanently marked for identification purposes. A log book containing key values relevant for the repair process shall be maintained. The contractor shall maintain records of all maintenance work. These records should incorporate

a) date,

b) temperature and relative humidity,

c) location,

d) details of maintenance work,

e) signature of pipe fitter.

## 6.4 Modifications and tie-ins

Modifications and tie-ins shall be considered as a new installation and be performed in accordance with requirements and recommendations contained in Clause 5.

## 6.5 Requirements for testing and re-certification

If repair, replacements or modification of the piping in the piping system have been made, the section containing the repaired or replaced piping shall be re-certified by performing a pressure test. The test pressure shall be 1,5 times the maximum design pressure of the system or 0,89 times the qualified pressure, whichever is lower.

A formal risk assessment should be carried out prior to the hydrotest. All supports, guides and anchors shall be in place prior to pressure testing. Temporary supports and restraints shall be added if required. All adhesive-bonded joints and all laminated joints shall be fully cured prior to pressure testing.

## 6.6 Decommissioning

### 6.6.1 Dismantling

Contractors shall be aware of all relevant health and safety requirements prior to the start of dismantling. All piping systems shall be de-pressurized and drained, and where necessary flushed and purged.

Dismantling is generally the reverse of installation, with piping systems being disconnected at joints. At non-mechanical joints, dismantling may be performed by cutting. In no circumstances shall burning equipment be used.

Attention shall also be paid to avoiding damage to adjacent GRP piping which is to remain in service, and which should be protected if necessary.

### 6.6.2 Disposal

All redundant components should be packaged and transported to proper location for disposal.

Components should be disposed of in a responsible environment-friendly manner. Components should not be incinerated in the open atmosphere.

© ISO 2002 – All rights reserved

Copyright International Organization for Standardization
Provided by IHS under license with ISO
No reproduction or networking permitted without license from IHS
Not for Resale

# Annex A
(normative)

## Defect types — Acceptance criteria and corrective actions

A summary of visible defects, along with acceptance criteria and corrective actions, is listed in Table A.1.

Acceptance criteria are based on experience from sea-water service. More conservative criteria may be specified for other more onerous services.

Major repair is defined as

a) permanent replacement,

b) temporary laminated joint prior to permanent replacement,

c) temporary clamps or saddles prior to permanent replacement.

Minor repair comprises on-site repair by grinding, cleaning and application of resin/hardener as recommended by the manufacturer.

Photographs showing defect examples are contained in Annex A of NORSOK M-622 [5].

For pipe body defects, the corrective action termed reject is defined as replace. For female joint ends, reject is defined as replace. For male joint ends, reject is defined as either replace or remove and re-thread.

Specification of threading, gauging and thread inspection for all threaded joints shall be in accordance with API Spec 5B. However, for non-standard API threaded connections, the dimensions and tolerances of the thread shall be according to the specifications of the manufacturer, for that qualified product. Other specifications shall again conform to API Spec 5B.


© ISO 2002 — All rights reserved
Copyright International Organization for Standardization
Provided by IHS under license with ISO
No reproduction or networking permitted without license from IHS
Not for Resale

**Table A.1 — Defect types, acceptance criteria and recommanded corrective action**

| GRP material/adhesive bonds | | | | | | |
|---|---|---|---|---|---|---|
| **Defect type** | **Description** | **Criteria** | **Corrective action Manufacture** | **Corrective action Delivery** | **Corrective action Installation** | **Corrective action Operation** |
| Blistering | Blisters forming under outer plies of laminate or inner resin rich layer | None permitted | Reject | Reject | Reject / Major repair | Acceptable if no leakage |
| Burn/Discoloration | Thermal decomposition evidenced by distortion or discoloration of the laminate surface | Distortion and/or burn deeper than surface resin layer | Reject (major defect) | N/A | Reject / Major repair | Reject / Major repair |
| | | Minor discoloration, and/or limited to surface resin layer, no extent limit | Repair (minor repair) | N/A | Minor repair | Minor repair |
| Chalking and loose fibres | Minor breakdown of outer surface due to UV radiation or acid rain, caused by storage over prolonged period | Depth limited to surface resin layer, surface area unlimited, no loose fibres | Repair (minor repair) | Accept | Accept | Accept. |
| | | Depth limited to surface resin layer, surface area unlimited, loose surface fibres | Reject | Reject | Minor repair | Minor repair |
| Chemical attack | Absence of resin surface | None permitted | Reject | Reject | Reject | Reject / Major repair |
| Chemical spill | Minor breakdown of surface resin | Subject to immediate action | Clean, accept | Clean, accept | Clean, accept | Clean, accept |
| Chip | Small piece broken from edge or surface. If reinforcing fibres are broken, damage is considered to be a crack | If undamaged fibres are exposed over any area; or no fibres are exposed but an area greater than 10 mm × 10 mm lacks resin | Minor repair | Minor repair | Minor repair | Minor repair |
| | | If no fibres are exposed and the area lacking resin is less than 10 mm × 10 mm | Accept | Accept | Accept | Accept |
| Crack | Actual separation of laminate, visible on opposite surfaces, extending through the wall. A continuous crack may be evidenced by a white area | Max. depth equal to or less than resin layer | Minor repair | Minor repair | Minor repair | Accept |
| | | Max. depth greater than resin layer | Reject | Reject | Reject / Major repair | Major repair |

© ISO 2002 – All rights reserved
Copyright International Organization for Standardization
Provided by IHS under license with ISO
No reproduction or networking permitted without license from IHS
Not for Resale

**Table A.1 —** *(continued)*

| GRP material/adhesive bonds | | | | | | |
|---|---|---|---|---|---|---|
| **Defect type** | **Description** | **Criteria** | **Corrective action** | **Corrective action** | **Corrective action** | **Corrective action** |
| | | | **Manufacture** | **Delivery** | **Installation** | **Operation** |
| Crazing | Fine hairline cracks at or under surface of laminate | Max. crack length less than 25 mm | Accept | N/A | Accept | Accept |
| | White areas are not visible as for cracks | Max. crack length greater than 25 mm | Minor repair | N/A | Minor repair | Minor repair |
| Cut roving | Broken or cut outer rovings due to scraping, scuffing or manufacturing process | Maximum 3 areas of cut rovings per pipe with each area less than 25 mm × 25 mm. Maximum depth such that wall thickness is not reduced below minimum | Accept | Accept | Accept | Accept |
| Deformation | Long-term change in dimensions, i.e. creep | Leakage not acceptable | N/A | N/A | N/A | Accept, but monitoring required |
| Delamination (internal) | "Bright solid" area in laminate due to lack of bond between resin and fibres. Separation of layers (plies) within laminate | None permitted | Reject | Reject | Reject | Accept, but monitoring required |
| Dimensional changes | Changes in dimensions resulting from loads, deflections imposed on the system | None permitted | N/A | N/A | N/A | Accept if no leakage, but monitoring required. |
| Dry spot | Area of incomplete surface film where the reinforcement has not been wetted by resin, leaving bare exposed fibres | None permitted | Reject | N/A | Reject/major repair | Major repair |


© ISO 2002 — All rights reserved
Copyright International Organization for Standardization
Provided by IHS under license with ISO
No reproduction or networking permitted without license from IHS
Not for Resale

**Table A.1 —** *(continued)*

| GRP material/adhesive bonds | | | | | | |
|---|---|---|---|---|---|---|
| **Defect type** | **Description** | **Criteria** | **Corrective action** | **Corrective action** | **Corrective action** | **Corrective action** |
| | | | **Manufacture** | **Delivery** | **Installation** | **Operation** |
| Flange cracks | Light area with or without broken fibres | None permitted | Reject | Reject | Reject / major repair | Detected during operation: Grind crack to max. depth of less than 30 % of flange step, and perform minor repair<br>Crack deeper than 30 %, or detected during manufacture or pre-fab. or installation: No cracks permitted. Reject / Major repair |
| Fracture | Rupture of laminate with complete penetration. Majority of fibres broken. Visible as lighter coloured area of interlaminar separation | None permitted | Reject | Reject | Major repair | Major repair |
| Impact damage | Light area with or without broken fibres | Circular or ellipsoidal “bright solid” areas (diameter greater than 10 mm ), none permitted<br>No leak at design pressure or at normal operating pressure | Reject | Reject | Major repair | Accept / Minor repair if service is sea or potable water, but monitoring required. |
| | | Ring areas of diameter less than 10 mm<br>No leak at design pressure or at normal operating pressure | Major repair | Major repair | Major repair | Accept / Minor repair<br>Major repair if service other than sea or potable water |
| | | Leak at design pressure or at normal operating pressure | N/A | N/A | Major repair | Major repair |

© ISO 2002 – All rights reserved
Copyright International Organization for Standardization
Provided by IHS under license with ISO
No reproduction or networking permitted without license from IHS
Not for Resale

**Table A.1 —** *(continued)*

| GRP material/adhesive bonds | | | | | | |
|---|---|---|---|---|---|---|
| **Defect type** | **Description** | **Criteria** | **Corrective action**<br>**Manufacture** | **Corrective action**<br>**Delivery** | **Corrective action**<br>**Installation** | **Corrective action**<br>**Operation** |
| Inadequate bond (e.g. “kissing”) | Touching faces, no adhesive | Debond area greater than 30 % of total bond area<br>Axial length of debond greater than 20 % of total axial bond length | Reject | N/A | Reject | Major repair |
| Inadequate cure of lamination resin or adhesive | Outside temperature and humidity specification<br>Incorrect bonding/cure procedure | In accordance with 8.3.3 of ISO 14692-2:2002 | N/A | N/A | Remake joint (major repair)<br>Post-cure joint (minor repair) | N/A |
| Inclusion | Foreign matter wound into laminate | None permitted | Reject | N/A | Reject | N/A |
| Incorrect lamination | Laminated joint incorrectly laid up with missing plies | None permitted | Reject | N/A | Reject | N/A |
| Incorrect spool dimensions | Incorrect dimensions, misaligned components | If misalignment can be compensated elsewhere in the system | N/A | N/A | Accept | N/A |
| | | If misalignment results in overstress caused by joints being pulled up | N/A | N/A | Reject | N/A |
| Lack of adhesive | Unbonded area of joint face | Debond area greater than 30 % of total bond area<br>Axial length of the debond area greater than 20 % of total axial bond length | Reject | N/A | Reject | N/A |
| Lack of fibres | Resin/fibre ratio too high | None permitted | Reject | N/A | Reject | N/A |
| Material degradation | Breakdown of resin, brittleness, softness/swelling due to ageing, chemical exposure, moisture ingress, etc. | Leakage not acceptable | N/A | N/A | N/A | Accept if no leakage, but monitoring required. |


© ISO 2002 — All rights reserved
Copyright International Organization for Standardization
Provided by IHS under license with ISO
No reproduction or networking permitted without license from IHS
Not for Resale

**Table A.1 —** *(continued)*

| GRP material/adhesive bonds | | | | | | |
|---|---|---|---|---|---|---|
| **Defect type** | **Description** | **Criteria** | **Corrective action**<br>**Manufacture** | **Corrective action**<br>**Delivery** | **Corrective action**<br>**Installation** | **Corrective action**<br>**Operation** |
| Misaligned joints | Movement during curing and air sucked in, resulting in voids<br>Joint not shaved correctly<br>Inadequate bond area<br>Incorrect dimensions | None permitted | N/A | N/A | Reject or major repair | N/A |
| Pit (pinhole) | Small crater in the inner surface of the laminate, with width (max. diameter) similar to or smaller than depth | Diameter greater than 0,8 mm, and/or depth greater than liner thickness or 10 % of wall thickness, and/or damaged fibres | Reject | Reject | Reject | Reject |
| | | Diameter less than 0,8 mm, and depth less than liner thickness or 10 % of wall thickness, and no damaged fibres | Accept | Accept | Accept | Accept |
| Restriction (excess adhesive) | Excessive resin, adhesive, foreign matter on the internal wall of pipe/fitting causing restriction | Flow obstruction of 5 % of inner diameter or 10 mm height, whichever is smaller | Remove by careful grinding | Remove by careful grinding | If access: Remove by careful grinding<br>If no access: Reject/major repair | If access: Remove by careful grinding<br>If no access: Reject/major repair |
| Uneven wall thickness after grinding of adhesive joint surface | | Allowable eccentricity: 0,002 × ID > 0,3 mm | Major repair | N/A | Major repair | N/A |
| Wear scratch | Shallow mark caused by improper handling, storage and/or transportation. If reinforcement fibres are broken, then damage is considered a crack | Undamaged fibres are exposed over any area, or no fibres are exposed but an area equal to or greater than 10 mm × 10 mm lacks resin | Minor repair | Minor repair | Minor repair | Minor repair |
| | | No fibres are exposed and area lacking resin is less than 10 mm × 10 mm | Minor repair | Minor repair | Minor repair | Accept |

© ISO 2002 – All rights reserved

Copyright International Organization for Standardization
Provided by IHS under license with ISO
No reproduction or networking permitted without license from IHS
Not for Resale

**Table A.1 —** *(continued)*

| GRP material/adhesive bonds | | | | | | |
|---|---|---|---|---|---|---|
| **Defect type** | **Description** | **Criteria** | **Corrective action Manufacture** | **Corrective action Delivery** | **Corrective action Installation** | **Corrective action Operation** |
| Weeping | Liquid penetration through pipe wall or joint | None permitted | Reject | N/A | Reject | Major repair |
| Weld sparks | Minor breakdown of outer surface due to effects of close-proximity welding | Same as for "Wear scratch" | Minor repair | Minor repair | Minor repair | Accept |
| Tears, cuts, grinds, shoulders, or any other imperfections | Continuity of the threads is broken | None within minimum length of full crest threads ($L_c$) from end of pipe | Reject | Reject | Reject | N/A |
| Air bubbles | Small bubbles at crest of threads | Max. length 3 mm, one per thread<br>Max. length 1,5 mm, ten per thread | Accept | Accept | Accept | N/A |
| Chips | Areas where over 10 % of thread height is removed | Max. 10 mm long, one permitted per thread outside the $L_c$ area. | Accept | Accept | Accept | N/A |
| | | None permitted in the $L_c$ area | Reject | Reject | Reject | |
| Cracks | In axial pipe direction | None permitted | Reject | Reject | Reject | N/A |
| | In radial pipe direction | None permitted that extend from teeth root into first ply of pipe wall | Reject | Reject | Reject | |
| Flat thread | Area where top of thread is broken or ground off | Max. 10 mm long, one permitted per thread outside the $L_c$ area, not to exceed 10 % of thread height. | Accept | | Accept | N/A |
| | | None permitted in the $L_c$ area | Reject | | Reject | |
| Finish | Finish cut end | Sharp edges, exposed fibres, protrusions and/or impact areas are not permitted | Reject | Reject | Reject | N/A |
| Squareness | Angle perpendicular to thread axis | Variations in end exceeding 1,5 mm are not permitted | Reject | Reject | Reject | N/A |
| NOTE N/A = not applicable; $L_c$ is the length measured from the end of the pipe to the furthest full crest thread. | | | | | | |


© ISO 2002 — All rights reserved
Copyright International Organization for Standardization
Provided by IHS under license with ISO
No reproduction or networking permitted without license from IHS
Not for Resale

# Annex B
(normative)

# Handling and storage

## B.1 Handling

### B.1.1 General

GRP piping components can be susceptible to mechanical damage from impact, sharp edges or scratching. Special consideration should therefore be given to protecting components and to ensuring that all personnel involved are given training in the relevant procedures. End protection of piping components shall remain in place during handling and transport.

### B.1.2 Lifting and transportation

Lifting, loading, unloading and transportation shall be performed in accordance with procedures agreed between the principal and the manufacturer. Under no circumstances shall pipe, fittings or pipe spools be thrown or dropped from any height. Furthermore, no chains, wire ropes or clamps shall be used for lifting pipes, fittings or pipe spools.

Pipe of small diameter can easily be lifted by hand. Short pipe sections, up to 3 m in length, may be lifted with a crane using at least one sling made of 100 mm wide canvas or suitable plastic. Longer pipe sections, up to 6 m in length, may be lifted with a 3 m spreader bar and two slings of 100 mm wide suitable plastic. The lifting point or points shall be such that the pipes are well balanced. Pipes shall be transported either packed in a container or strapped onto pallets. See also B.2 for additional packing/storage requirements.

Fittings shall be loaded by hand onto pallets, or into crates or baskets, with intercomponent packing material to avoid transportation damage, and shall be strapped down during lifting.

For lifting pipe spools, two or more slings of 100 mm wide suitable plastic may be necessary. The lifting points shall be such that the pipe spools are well balanced. The canvas or suitable plastic slings shall not be placed under fittings or pipe connections.

During transportation, all components shall be firmly secured to prevent excessive movement that could result in damage. Particular attention should be paid when components are to be transported in containers by ship.

### B.1.3 Temporary supports

Temporary restraining supports shall be attached to complex prefabricated spools prior to lifting, in order to minimize bending strain in the spools.

## B.2 Storage

### B.2.1 General

Storage of piping components may be required prior to installation. Special precautions designed to avoid possible damage to any item shall be taken. Consideration shall be given to the state of the storage surface (i.e. level, with no sharp objects), high winds, temperature and exposure to ultraviolet radiation.

© ISO 2002 – All rights reserved

Copyright International Organization for Standardization
Provided by IHS under license with ISO
No reproduction or networking permitted without license from IHS
Not for Resale

### B.2.2 Pipe

Pipe may be stacked for space-saving storage as illustrated in Figure B.1, subject to the following requirements.

a) Pipe may be stacked in heights up to 1,5 m if side supports are provided. Spacer stripping (approximately 50 mm × 100 mm) should be used both as supports for the pipes and as separators between pipe layers. The plastic or wooden stripping when in pipe stacks should be located directly above each other. Spacer stripping thickness should be sufficient to ensure that pipes are not in contact with each other. The maximum distance between supports shall be 3 m and the supports shall be placed at a minimum of 1 m from the end of the pipes. Pipe with bell ends may be stored with the bell ends in alternate directions to avoid contact and possible damage to the ends. Spacer stripping shall be located clear of the bell ends.

b) It is recommended that all pipes and fittings be supplied complete with end protection (both inside and outside) of the pipe wall and be transported either packed in a container or strapped onto pallets, suitable for site storage up to two years.

c) Pipes of small diameter may be stored inside pipes of larger diameter, assuming that spacers are used and that the spacers are of sufficient size and strength to prevent contact between the pipes.

d) End protection should protect both inside and outside of the pipe ends and shall remain in place during storage. Thickness of wooden stripping shall be sufficient to ensure that pipes are not in contact with each other.

e) Strapping down of GRP pipe stacks may be necessary to prevent damage during high winds. Suitable tie-downs such as nylon straps or padded metal strapping should be used to secure the stack. Caution should be used to prevent damage when securing the stack.

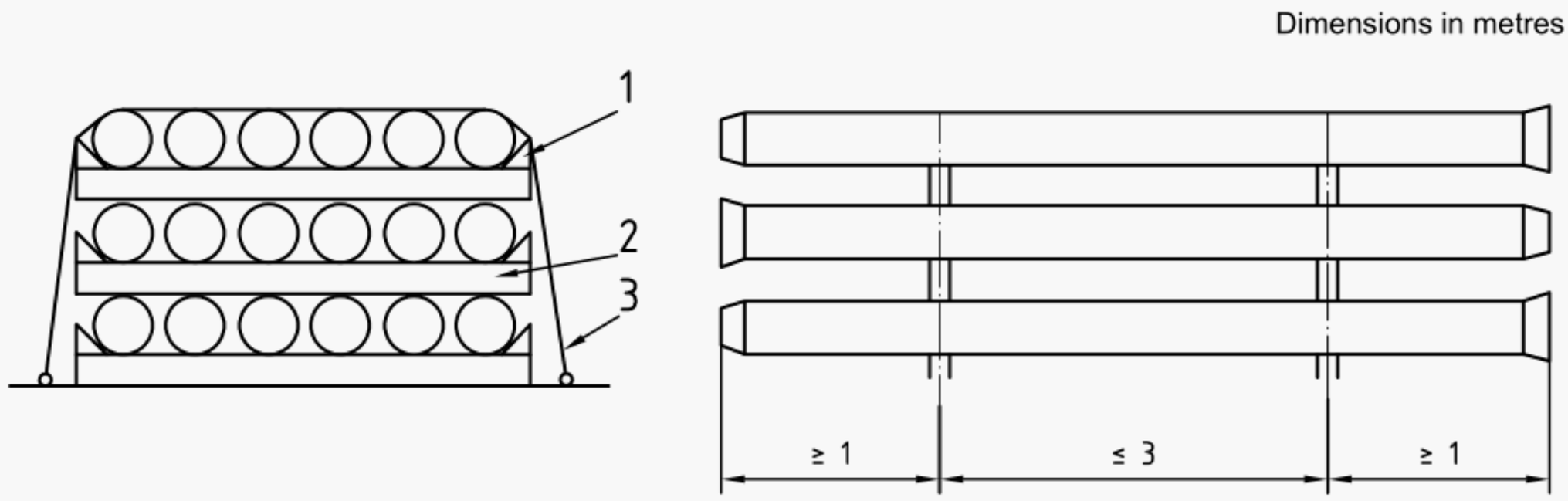


**Key**

1 side support
2 spacer support
3 strapping rope

**Figure B.1 — Stacking of pipes**

### B.2.3 Fittings

Fittings may be shipped in crates or boxes and may be stored in these crates or boxes provided the package is undamaged and suitable for long-term storage. End protection of fittings and flanges should remain in place during storage.


© ISO 2002 — All rights reserved
Copyright International Organization for Standardization
Provided by IHS under license with ISO
No reproduction or networking permitted without license from IHS
Not for Resale

### B.2.4 Pipe spools

Pipe spools should be packed by the manufacturer to avoid damage during transportation. If possible, the pipe spools shall be stored with this temporary protection in place. End protection of fittings and flanges should remain in place during storage. Pipe spools shall not be stacked.

### B.2.5 Adhesive/resin systems

Adhesive kits and resin systems shall be stored in the original packaging in accordance with the pipe manufacturer's recommendations and safety regulations applicable to the storage location. All separately delivered fire protection materials shall be delivered at the receiving facility in factory-sealed containers or in crates. Storage conditions shall be in accordance with the material safety data sheet for the material in question. Particular attention shall be accorded to the recommended storage temperatures, and the requirement to keep certain materials apart for fire safety reasons. Unless otherwise specified by the manufacturer, materials shall be stored in the original packaging at a temperature of less than 30 °C.

### B.2.6 Ancillaries

Ancillary materials (elastomeric O-rings, flange gaskets, locking strips, reinforcements and lubricants) shall be stored in accordance with the manufacturer's recommendations. Due regard shall be paid to exposure to direct sunlight (UV radiation), chemicals, biological growth and extremes of temperatures.

© ISO 2002 – All rights reserved

Copyright International Organization for Standardization
Provided by IHS under license with ISO
No reproduction or networking permitted without license from IHS
Not for Resale

# Annex C
(informative)

# Guidance for use of jointing methods

## C.1 General

For most applications, thrust-resistant types of joint are required, e.g. adhesive-bonded joint, elastomeric seal lock joint, laminated joint, threaded joint or flanged joint.

However, for well-supported and anchored piping, non-thrust-resistant systems can be used, e.g. mechanical O-ring elastomeric bell-and-spigot seal joints (without locks).

The designer should take into account the following factors when selecting the jointing method:

a) criticality (reliability);

b) performance under bending loads;

c) installation environment (ease of inspection);

d) ease of fabrication.

## C.2 Adhesive-bonded joints

### C.2.1 Description

The adhesive-bonded joint consists of a tapered bell end and a tapered or cylindrical spigot end, bonded with an adhesive/hardener mixture, see Figure C.1. Alternatively, the bell-and-spigot may be taper-threaded.

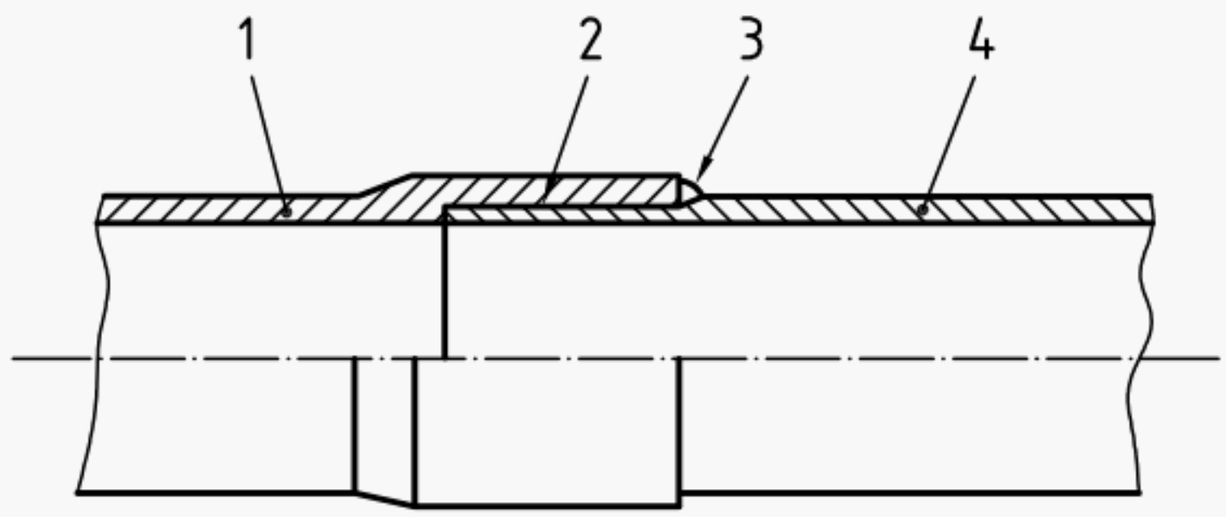


**Key**

1 pipe with integral socket end
2 adhesive
3 spew fillet of adhesive
4 pipe with spigot end

**Figure C.1 — Adhesive-bonded joint**


--`,,```,,,,`````-`-`,,`,,`,`,,`---
Copyright International Organization for Standardization
Provided by IHS under license with ISO
No reproduction or networking permitted without license from IHS
Not for Resale
© ISO 2002 — All rights reserved

When a cylindrical spigot is used, the joint is made up to a shoulder. The tapered bell and tapered spigot joint has two matching tapered surfaces and does not make up to a shoulder. The former has the advantage of enabling the position of final make-up to be readily determined. The latter (taper/taper joint) is a stronger joint but is more prone to positional errors if incorrectly assembled, which can weaken the joint.

There is a perception that adhesive joints require a low degree of skill to make up correctly. This is not the case; a similar degree of discipline to that needed by coded welders is required, although the task itself is easier. Preparation and make-up of the adhesive joint tends to become more difficult with increasing diameter, particularly for diameters above 450 mm.

An issue of concern is the adhesive bead that is created when the joint is made up and which can protrude into the bore of the pipe. Unless great care is taken to control the size of the bead when applying the adhesive, these beads can be very large, with a height of several millimetres as experience has shown.

### C.2.2 Preparation

End caps and surface protectors should be left in place until just prior to surface cleaning.

The manufacturer's recommendations regarding preparation and adhesive application at ambient temperature and humidity should be followed. A suitable environmentally controlled habitat may be necessary in adverse weather conditions.

If a taper/taper joint is being prepared, it is recommended that

a) a self-adhesive masking tape is wrapped around the pipe circumference at the edge of the taper prior to shaving. This very significantly reduces localized damage to the outer layer of the pipe and produces a clean-cut edge at the end of the taper;

b) following shaving of the pipe using a proprietary tool, hand abrasion with abrasive paper should be undertaken to remove most loose fibre filaments. The prepared surface of the pipe should then be cleaned with a solvent (acetone) and all loose fibres and other debris removed from the surface.

The inside of the socket, which is usually pre-machined, should receive the same hand abrasion and solvent-cleaning process as the prepared pipe end. If the bonded surface has been prepared beforehand, each bonding surface should be checked visually for ultraviolet degradation prior to cleaning, by lightly sanding the bonding surfaces. UV degradation can be noted by a change in colour of the sanded surface. The appearance of UV degradation requires refinishing of the surface. Spigots should be re-shaved. Sanding should remove all discolouring, but not to the degree that flat spots are made.

### C.2.3 Adhesive mixing

Adhesive should not be used beyond its expiry date. Any leaking or damaged kits should be safely discarded, in accordance with the material safety data sheet. The adhesive components should be within the temperature range recommended by the manufacturer before mixing.

The complete contents of the hardener container should be emptied into the base adhesive. All the adhesive and all the hardener should be mixed; kits should never be split. Mixing should continue until the adhesive mixture has a uniform colour and consistency. The working life (pot life) of the adhesive depends on the type of adhesive used and the mixing temperature. If the adhesive starts to heat up or become more viscous in the mixing can, it has begun to cure and should be discarded. If lumps or gels are apparent in the can, the adhesive should be discarded.

### C.2.4 Assembly

Bonding surfaces should be thoroughly cleaned and sanded. The cleaned surfaces should not be touched or contaminated by oil or moisture prior to bonding. If surfaces become wet or contaminated, they should be cleaned, re-sanded and made dust-free.

© ISO 2002 – All rights reserved

Copyright International Organization for Standardization
Provided by IHS under license with ISO
No reproduction or networking permitted without license from IHS
Not for Resale

Pipe connections should be aligned as true as possible. Any visually detectable misalignment is not permitted. If recommended by the pipe manufacturer, a reference mark should be made on the spigot end of the connection to check for proper insertion and seating after connection is made up. The distance of the reference mark from the spigot nose should be specified by the manufacturer for each pipe diameter and should include the insertion depth of the spigot in the bell plus 25 mm.

Bonding surfaces should have a temperature of at least 23 °C and less than 40 °C prior to application of adhesive. If preheating is required, separate heating of bell-and-spigot by electric blanket is recommended. Contamination of the spigot can be avoided by inserting the heating blanket in the pipe bore instead of by external wrapping. If the air humidity is high, water can condense on the surfaces prior to bonding, which will degrade the bond strength.

A thin uniform coating of adhesive should be applied to the bonding surface, taking care to avoid an excessive resin bead on the inside of the pipe which will cause flow disturbance. A thin layer of adhesive should be applied to the inside surface of the socket and a thicker layer to the pipe spigot. This minimizes the amount of spew fillet in the bore of the pipe at the nose of the joint. All machined or sanded surfaces should be coated. Adhesive should be coated down into the bell to the insertion depth of the spigot plus 25 mm. The cut end of the spigot should be coated.

Piping of diameter up to 150 mm may be assembled by hand. The spigot should be inserted as far as possible by hand. The spigot should be driven into the bell in a manner that does not damage the pipe or fitting. Assembly of the joint should be such that the design length of the spigot is entered into the coupling. With tapered couplings, misalignment is virtually impossible if the spigot is sufficiently entered into the coupling. Proper insertion of straight spigot connections is verified by measuring the reference mark on the spigot; it should be 25 mm from the bell.

Connections with a diameter of 200 mm or more may be assembled with a ratchet winch or hydraulic pullers; furthermore, care should be taken to prevent the connections from being damaged during this operation. Spigots should be inserted until they bottom against pipe stops and the reference marks are in their fully home position.

Assembly of the adhesive joint up to full insertion should be performed as a single action to avoid entrainment of air into the adhesive. If the joint has been pulled out again so as to entrain air, the old adhesive should be wiped off and the bonding procedure repeated. The spew fillet on the outside of the joint should be shaped to be smooth and at an angle of approximately 45°.

### C.2.5 Curing

Heat-assisted curing may be required for epoxy adhesive-bonded connections, for which purpose full-wrap electric collars should be used. Heating collars should be provided or approved for use by the pipe manufacturer. Heat-assisted curing should be performed immediately after bonding. The curing time and temperature depend on the type of adhesive used. For large assemblies and high wall thickness pipe, the use of ovens, if available, is preferable to individual heating collars. Accurate temperature control and monitoring is essential, since undercure of the adhesive may result in significant loss of strength. Open pipe ends should be closed in order to avoid circulation of cold air through the pipe spool.

For large wall thicknesses, the curing times given by the manufacturer should be verified to give complete cure for the adhesive on the inside. (Sometimes the curing times given will not give the recommended temperature because of the low heat transfer of the GRP material.)

If ambient temperatures are below 5 °C, the heating collars should be long enough to completely encircle the connection or fitting area to be cured, plus a minimum 50 mm overlap. Heating collars should be wrapped around the connection to be cured so that the collar thermostat is not against the pipe wall. The heating collar (blanket) should be 50 mm to 100 mm longer axially than the adhesive joint in order to get full heating of the whole pipe. Heating collars should be insulated. Foil-backed fibreglass insulation is typically used. Insulation should overlap the collar by at least 100 mm on either side and be tied down onto the pipe at the edges. Pipe ends should be loosely closed with non-sealing devices to prevent interior cooling in windy conditions.

Flanges may be cured by inserting the heating collar on the inside of the pipe. Excess adhesive should be wiped from the interior of the pipe prior to inserting the collar. A fibreglass core for the collar may be made from a section of pipe having the same diameter as that being connected.


© ISO 2002 — All rights reserved
Copyright International Organization for Standardization
Provided by IHS under license with ISO
No reproduction or networking permitted without license from IHS
Not for Resale

Adhesive-bonded connections between pipes, fittings, and flanges should not be disturbed, and if necessary, provided with additional bracing to prevent accidental movement until fully cured.

## C.3 Laminated joints

### C.3.1 Description

The laminated joint, see Figure C.2, consists of plain-ended pipe and fittings prepared, aligned and laminated with reinforcing fibres and resin/hardener mixture. There are two types of laminated joint: the outer surface of the pipe is either lightly abraded, leaving a cylindrical surface, or else abraded sufficiently to provide a taper.

The advantage of laminated joints over adhesive joints is that preparation of the joint is from the outside.

For use as field joints (hook-up joints), laminated joints should be considered due to their flexibility to accommodate minor misalignments

### C.3.2 Preparation

Before work on a laminated joint is started, all necessary equipment for completing the procedure should be available.

A jig or other holding device should be used to ensure that the pipes are maintained with the joint faces held tightly together without offset. If a gap between the ends of the pipe is unavoidable, a suitable putty should be used to fill the gap. The restraints should be left in place until the joint has fully cured. A balloon or rubber packer is used by some producers to make a smooth inner surface. The balloon is deflated for removal.

When connecting two pipes, the ends of the pipes should be chamfered back to a minimum taper of 1 in 6, as illustrated in Figure C.2.

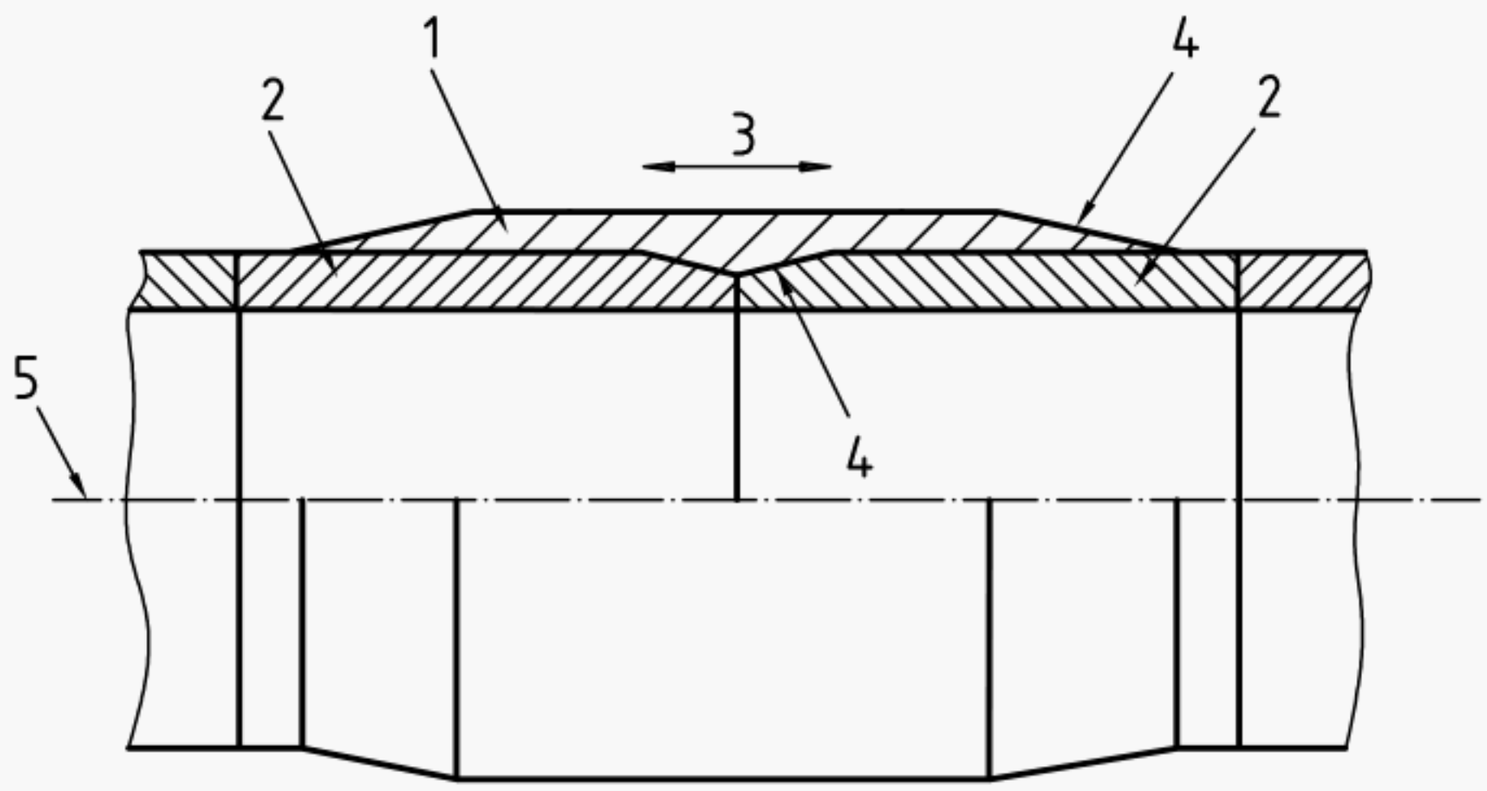


**Key**

1 laminate overlay
2 pipe laminate
3 laminate length
4 tapers not steeper than 1 in 6
5 pipe centreline

**Figure C.2 — Laminated joint**

© ISO 2002 — All rights reserved

Copyright International Organization for Standardization
Provided by IHS under license with ISO
No reproduction or networking permitted without license from IHS
Not for Resale

The outer pipe surface should be abraded to remove the outer resin-rich surface and expose the reinforcing fibres over an area extending to at least 50 mm outside both ends of the laminate as defined in the manufacturer's technical specifications. The pipe ends should also be abraded.

Bonding surfaces should be cleaned as recommended by the manufacturer. The cleaned surfaces should not be touched or be contaminated by oil or moisture prior to bonding. If surfaces become wet or contaminated they should be cleaned, re-ground and made dust-free.

### C.3.3 Resin mixing

The resin used should be of the same type, or compatible with, the resin used in the manufacture of the pipes.

The curing agent or hardener should be mixed with resin, strictly following the recommendation of the manufacturer regarding weighing, metering, mixing and temperature. No more resin should be prepared than can be applied within the pot life of the mixture. Mixing should continue until the resin mixture has a uniform colour and consistency.

The working life (pot life) depends on the type of resin and hardener used and the mixing temperature. If the resin starts to heat up in the mixing can, it has begun to cure and should be discarded. If lumps or gels are apparent in the can, the resin should be discarded.

### C.3.4 Assembly

The pipe ends should be placed together and fixed in the correct position. Bonding surfaces should have a temperature of at least 15 °C and less than 40 °C prior to application of resin. An electric heating blanket may be used to heat the pipe ends. The chamfered, abraded and cut surfaces should be covered with a uniform resin or adhesive layer.

Layers of chopped strand mat and/or woven rovings impregnated by resin/hardener mix should be applied as recommended by the manufacturer. The manufacturer's recommendations regarding reinforcing-layer wrapping tension should be followed in order to force out air inclusions, optimize resin impregnation and ensure correct glass/resin ratio. Wrapping should proceed, each layer impregnated with resin, until the required thickness is obtained. An outer resin-rich layer should be applied.

### C.3.5 Curing

Heat-assisted curing is recommended for all laminated epoxy joints; for which purpose full-wrap insulated electric collars should be used. Heating collars should be provided or approved for use by the pipe manufacturer. Other means of heat-assisted curing should be agreed with the principal. Heat-assisted curing should be performed immediately after bonding. The curing time and temperature depend on the type of resin used.

NOTE Additional heat curing can be detrimental to polyester and vinyl ester joints in some cases.

Heating collars should be long enough to completely encircle the joint or fitting area to be cured, plus a minimum 50 mm overlap. The heating collar should be wrapped around the joint to be cured in such a way that the collar thermostat does not rest against the pipe wall. A protective film (plastic, metal) between the collar and uncured laminate should be used to prevent the collar from being bonded to the laminate. If ambient temperatures are below 5 °C, the heating collars should be insulated. Foil-backed fibreglass insulation is typically used. Insulation should overlap the collar by at least 100 mm on either side and be tied down onto the pipe at the edges. Pipe ends should be loosely closed with non-sealing devices to prevent interior cooling in windy conditions.

Laminated joints should not be moved or otherwise disturbed until fully cured.


© ISO 2002 — All rights reserved
Copyright International Organization for Standardization
Provided by IHS under license with ISO
No reproduction or networking permitted without license from IHS
Not for Resale

## C.4 Mechanical O-ring elastomeric bell-and-spigot seal lock joints

These are the simplest joints to assemble, and can be designed to enable a small amount of axial and angular movement within the joint, for example to accommodate flexing of the hull in ships. They are more bulky than adhesive joints but have the advantage that they can be quickly assembled in poor working conditions, e.g. for concrete gravity-base piping.

Joints with elastomer sealing O-rings or lip-sealing rings are made up of a spigot end and a bell end, see Figure C.3. The bell may either be an integrated part of the pipe (single bell), or a separate item (double bell). A double bell is used for joining two pipes both with spigot ends. Joints with two or more O-rings may be used. Two types of bell-and-spigot joint with elastomer seals and O-rings are acceptable:

— tensile-resistant type, locked with a locking strip;

— non-tensile-resistant type, allowing greater axial movement.

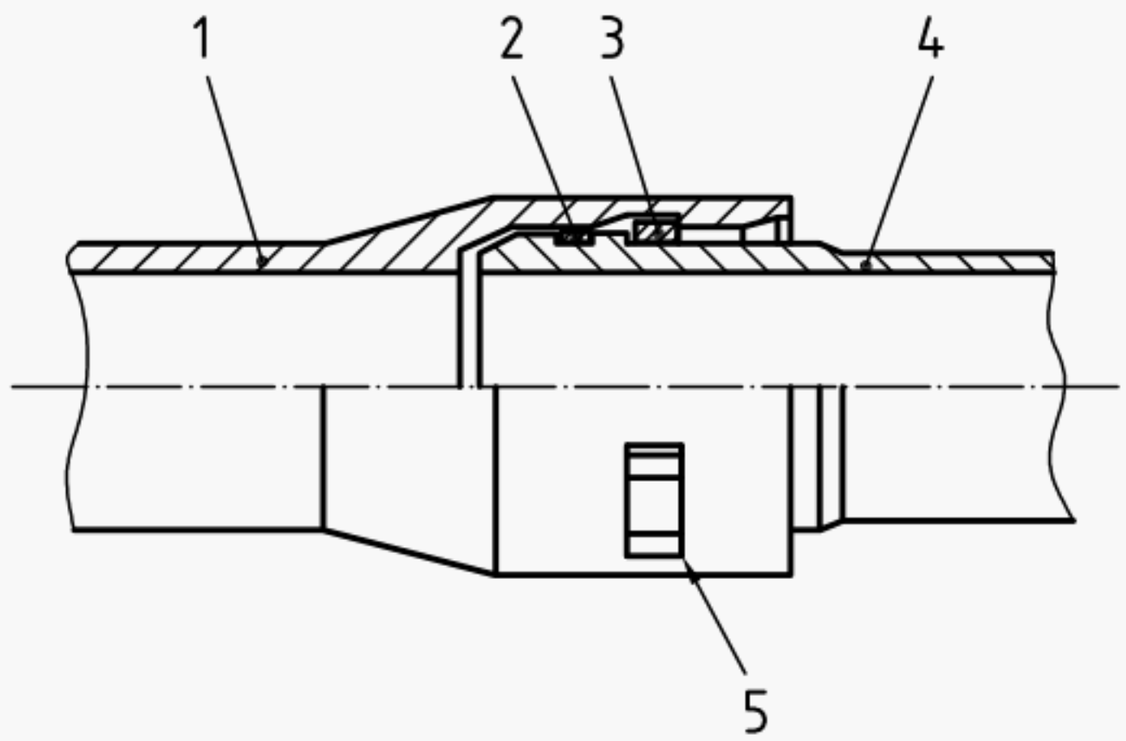


**Key**

1 pipe with integral socket end
2 elastomeric ring
3 locking strip
4 pipe with spigot end
5 insert hole for locking strip

**Figure C.3 — Typical elastomeric bell-and-spigot sealed joints (locking type)**

The following should be regarded as minimum requirements for installation.

a) The bell-and-spigot should both be inspected for damage prior to installation. Damaged parts should be set aside for evaluation by responsible personnel.

b) The surfaces to be connected, including the gasket grooves, should be clean.

c) The seal ring and groove should be checked for the correct dimensions, in particular the ring cross-section and diameter.

d) Non-symmetric seals, such as lip-seals, should be checked for correct installation in the grooves.

e) Clean, non-contaminated lubricant should be used on both seals and spigot end prior to insertion.

f) Correct tooling should be used to enter the spigot into the bell to avoid jamming or damage to the seals. This is particularly important for large dimensions.

© ISO 2002 – All rights reserved

Copyright International Organization for Standardization
Provided by IHS under license with ISO
No reproduction or networking permitted without license from IHS
Not for Resale

g) Entry location marks on the spigot (if applicable) should be checked to ensure correct entry distance.

h) Pipe sections should be aligned as straight as possible in order to retain the O-rings in their grooves.

i) A feeler gauge should be used to establish good seating of the seals.

j) For key lock tensile-resistant joints, a clean and lubricated locking strip (if applicable) should be inserted in the complete circumference of the locking strip groove, and the locking strip should have the correct cross-section and length.

## C.5 Flanged joints

Flanged joints facilitate connections with steel piping and allow for easy assembly and disassembly of piping systems. GRP flanges should be connected to flat-face steel flanges. When connecting to raised-face flanges, support rings may be needed, depending on gasket type, to restrict excessive bending stresses when the bolts are torqued up. Two types of flange are commonly used:

— fixed-type flange, adhesively bonded or laminated to the pipe ends;

— loose ring-type flanges, with GRP collars adhesive-bonded or laminated to the pipe ends with loose backing flanges in GRP or steel.

The manufacturer's installation instructions regarding flanges should be followed to ensure good quality joints. The following should be regarded as minimum requirements.

a) Adhesive-bonded flanges should be squared off before installation.

b) Bolt-thread lubrication should be in accordance with the manufacturer's recommendations.

c) Correct torquing should be strictly performed using a torque wrench. Over-torquing to compensate for poor alignment of flanges or other discrepancies is not acceptable.

d) tightening sequence, torque increments and maximum torque should be in accordance with the manufacturer's recommendations.

e) connecting bolts should be inserted with washers on both sides. Flange faces should be intact, clean and plane.

f) correct gaskets for the required service should be used.

g) flanges should be adhesive-bonded square to the axis of the pipe, to within the tolerance as detailed in 5.5.4.3.

h) pipework should not be pulled to align mating flanges.

## C.6 Threaded connections

Three types of threaded connection are available for both high- and medium-pressure GRP pipe systems:

a) the male/male joint, using a coupler with standard API threads (e.g. EUE 10RD, EUE 8RD, so-called round threads), see Figure C.4;

b) the female/male threaded "integral" joint with standard API threads and sealing via the threads using PTFE tape and/or special compounds as recommended by the manufacturer, see Figure C.5;

c) the female/male coarse-threaded "integral" joint, including O-ring for sealing, see Figure C.6.


Copyright International Organization for Standardization
Provided by IHS under license with ISO
No reproduction or networking permitted without license from IHS
Not for Resale
© ISO 2002 — All rights reserved

To reduce friction and enhance sealing performance, thread fillers, e.g. graphite and/or ceramic particles, may be used. PTFE-based lubricants may also be used to reduce friction, i.e. to facilitate low make-and-break torque.

Threaded end connections which conform to API standards should meet the requirements of [3]. Threaded end connections which are the design of the manufacturer should meet the specifications of the manufacturer, regarding e.g. manufacturing quality, surface finish, etc.

## C.7 Other mechanical joints

Various proprietary mechanical joints or couplers are available. Reference should be made to the manufacturer's data for guidance on use.

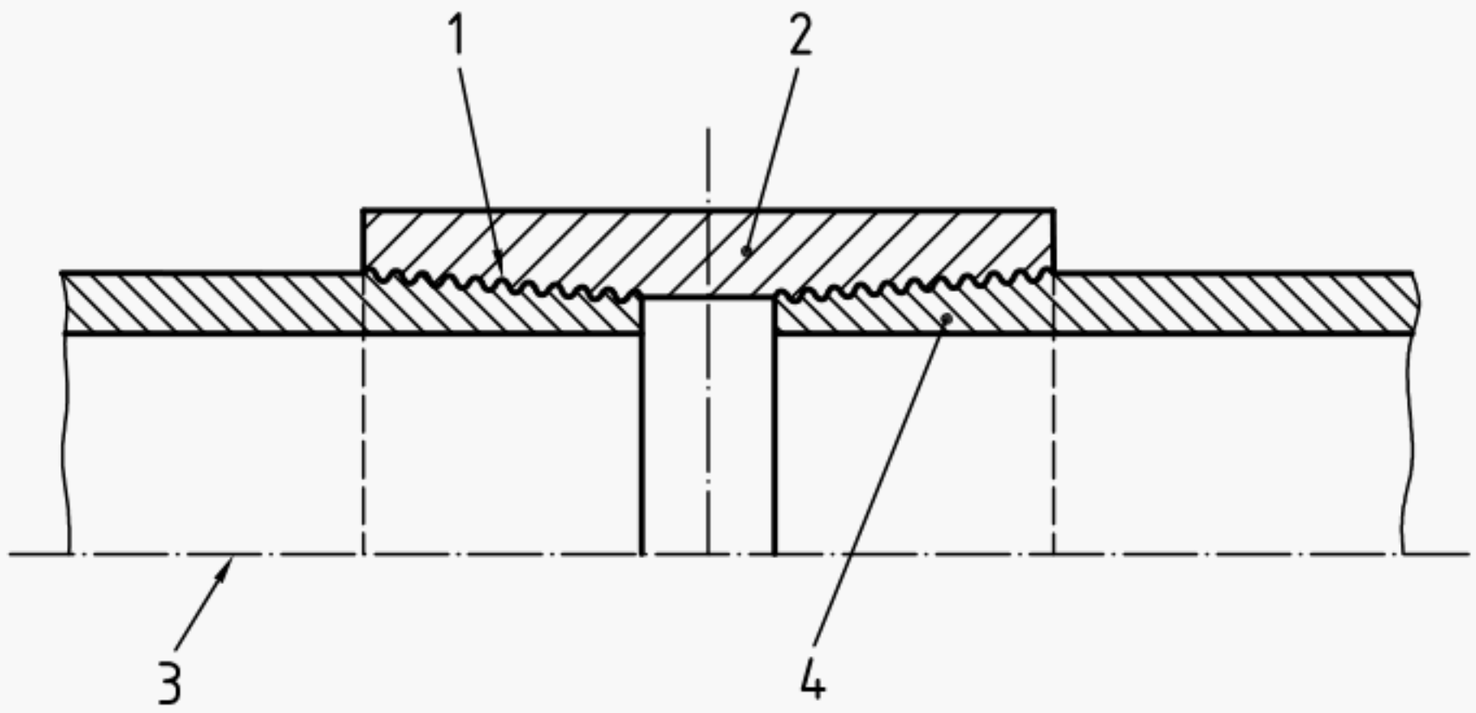


**Key**

1 standard API threads

2 female thread connector

3 pipe centreline

4 pipe laminate

**Figure C.4 — Standard API joint**

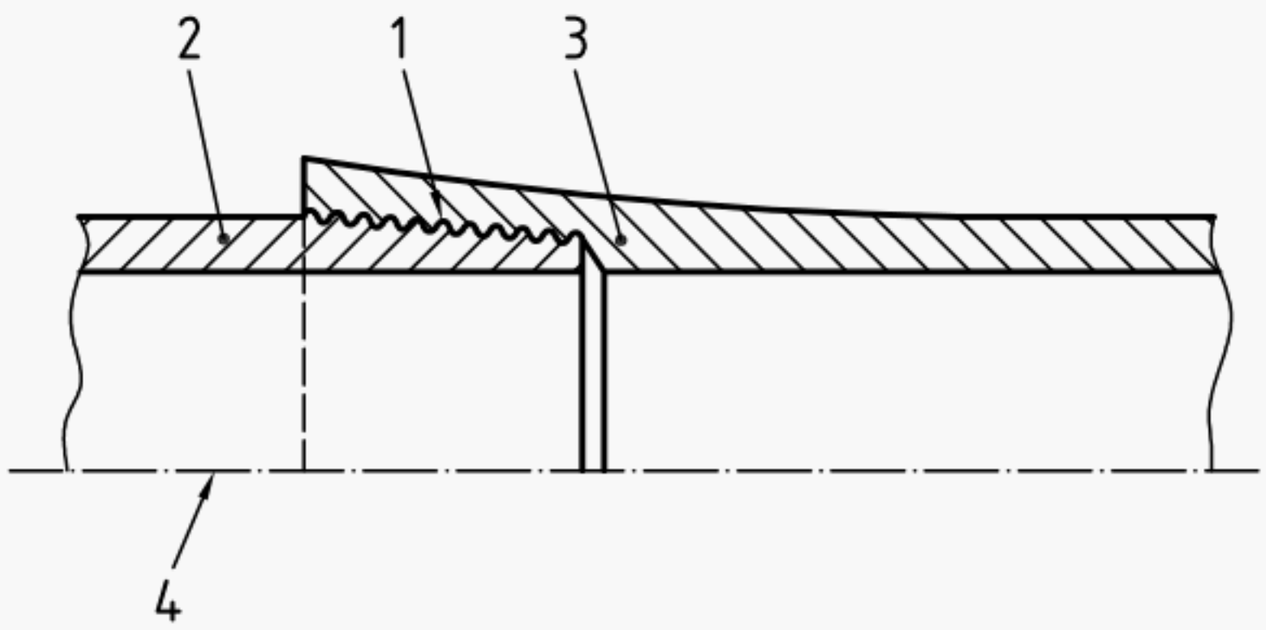


**Key**

1 standard API threads

2 pipe body – male end

3 pipe body – female end

4 pipe centreline

**Figure C.5 — Integral joint (API thread)**

© ISO 2002 – All rights reserved
Copyright International Organization for Standardization
Provided by IHS under license with ISO
No reproduction or networking permitted without license from IHS
Not for Resale

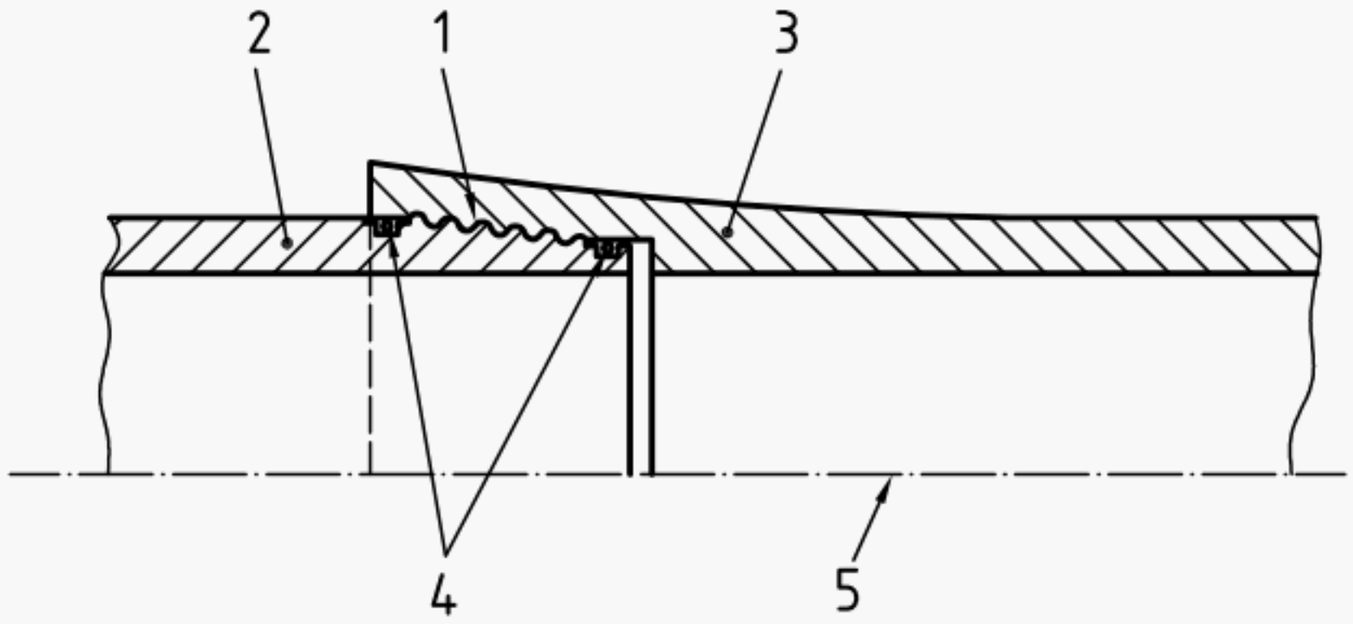


**Key**

1 coarse thread

2 pipe body – male end

3 pipe body – female end

4 O-ring seals

5 pipe centreline

**Figure C.6 — Integral thread (coarse thread + O-ring seals)**



Copyright International Organization for Standardization
Provided by IHS under license with ISO
No reproduction or networking permitted without license from IHS
Not for Resale
© ISO 2002 — All rights reserved

All three steps can be carried out separately over an extended period of time but they must have been completed within 2 years for the pipe fitter to become qualified. However it is recommended that all three steps be carried out consecutively over a short time period.

### D.4.2 Basic skills, age and experience

The candidate should be fluent in the language in which the course is being conducted. The candidate shall be a minimum of 18 years of age and fulfil either of the following minimum experience requirements:

a) have a trade certificate demonstrating basic skills as an industrial pipe fitter or plastics technician; or

b) have minimum 1 year documented pipe-fitter training experience, or experience with fibre-reinforced thermoset plastics.

Other documented evidence of education, training and experience may be considered to give equivalent competence.

Candidates shall be in satisfactory physical condition and shall have eyesight which fulfils either of the following requirements:

— ISO 9712 or equivalent, and have an eyesight test every 12 months; or

— unaided or corrected near visual acuity in at least one eye, such that the candidate is capable of reading N4 Times Roman type at a distance of not less than 30 cm on a standard reading test.

### D.4.3 Training

#### D.4.3.1 Basic course

The basic course shall give a theoretical and practical introduction to the most important elements of the installation of composite pipes. As a minimum the pipe fitter course shall include the following:

a) terminology, types of pipe, manufacture/fabrication, applications;

b) material properties and engineering requirements;

c) health, environment and safety;

d) joining methods and procedures, including typical defects and failure modes;

e) procedures for measuring electrical continuity;

f) transport, handling and storage;

g) installation;

h) repair;

i) quality assurance and control, including methods of inspection;

j) practical training in pipe joining (adhesive bonding, laminated, elastomeric bell-and-spigot, threaded and flange connections). This activity may be conducted as part of the supplier-specific course, if appropriate.

During the course, each candidate shall prepare pipe joints of 150 mm diameter in a spool piece, which shall be pressure-tested and visually inspected in accordance with D.4.3.3. The length of each test piece shall be in accordance with ISO 14692-2:2002, 6.2.1.2.

On completion of the course, the candidate shall be presented with a certificate of attendance.


© ISO 2002 — All rights reserved
Copyright International Organization for Standardization
Provided by IHS under license with ISO
No reproduction or networking permitted without license from IHS
Not for Resale

#### D.4.3.2 Supplier-specific course

##### D.4.3.2.1 General

The supplier-specific course gives training and testing requirements on products and procedures for a specific jointing method, pipe diameter and wall thickness, and may be arranged by or with assistance from the supplier or contractor. The pipe samples shall be representative of the pressure and diameter limitations to be specified in the qualification certificate.

##### D.4.3.2.2 Adhesive and laminated joints

Pressure tests in accordance with D.4.3.3 on joints prepared by the candidate with specific jointing methods and/or pipe size are mandatory. All pressure tests shall be carried out by the candidate in accordance with a written procedure relevant to the specific manufacturer's jointing method, materials, etc., and approved by the contractor or supplier.

The pipe fitter is qualified, after successful completion of the pressure test, for the joining of pipe diameters within the ranges given in Table D.1. The length of each test piece shall be in accordance with ISO 14692-2:2002, 6.2.1.2.

**Table D.1 — Range of pipe diameters approved for fitter repair**

| Pressure test pipe nominal diameter<br>mm | Range of pipe diameters<br>mm |
|---|---|
| 150 | 25 to 300 |
| 300 | 150 to 600 |
| > 600 | 600 to nominal diameter |

For pipe diameters above 600 mm, qualification shall be given after successful completion of the pressure test on an individual (diameter) basis. The pipe fitter will become qualified after successful completion of the pressure test for the joining of pipe diameters within the range of 600 mm up to the pipe diameter of the pressure test.

Furthermore, the pipe fitter is qualified, after successful completion of the pressure test, for joining pipe up to pressures of 0,67 times the qualified pressure of the pipe used in the pressure test.

After the pressure test, the joint shall be split axially and visually inspected in accordance with Table A.1. No leakage or separation of the joints shall be observed. The dimensions shall be measured and compared with the requirements of the joint assembly procedure.

The assembly of test pieces shall be inspected during the test, and electrical continuity shall also be evaluated where appropriate. The adhesive joint should have a uniform fillet of adhesive at the outside edge and there should be no exessive bead of adhesive protruding into the inside bore of the pipe.

##### D.4.3.2.3 Mechanical joints

Pressure tests in accordance with D.4.3.3 on joints prepared by the candidate are mandatory. All pressure tests shall be carried out by the candidate in accordance with a written procedure relevant to the specific manufacturer's jointing method, materials, etc., and approved by the contractor or supplier.

The pipe fitter is qualified, after successful completion of the pressure test, for the joining of pipe diameters within the range of 25 mm up to the diameter of the test piece. The length of each test piece shall be in accordance with ISO 14692-2:2002, 6.2.1.2.

The joints shall be visually examined in accordance with Table A.1. No leakage or separations of the joints shall be observed.

© ISO 2002 – All rights reserved

Copyright International Organization for Standardization
Provided by IHS under license with ISO
No reproduction or networking permitted without license from IHS
Not for Resale

#### D.4.3.3 Pressure-testing procedure

The test pieces shall be pressure-tested with water, generally (in accordance with ASTM D1599) to a minimum pressure equal to 1,75 times the qualified pipe pressure, $p_q$. This pressure shall be held for 1 h with no leakage or separation of the joints. The test shall be performed with free ends in such a way that the joint is exposed to stresses in both axial and hoop directions.

NOTE 1 If flanged blanked ends are used, it may be necessary to up-rate the gaskets to withstand the test pressure without leaking.

NOTE 2 The test pressure is limited to less than 2,0 times the qualified pressure, $p_q$, to prevent the possibility of weepage failure through the pipe wall, which may occur with pipes with a shallow regression curve.

The test piece assembly shall be inspected at each incremental increase in pressure for evidence of cracks, leaks or other signs of loss of pressurizing medium. Such signs shall be cause for failure.

### D.4.4 Examination and qualification

The pipe fitter candidate shall become qualified on successful completion of

a) attendance at the basic course,

b) an examination on the topics covered in the basic training course,

c) attendance at a minimum of one supplier-specific training course at which the results of the pressure test have been witnessed by the recognized qualification body.

### D.4.5 Validity and renewal

#### D.4.5.1 Validity

The pipe fitter qualification certificate shall be valid for a period of two years from the date of successful completion of the basic course examination. A minimum of four weeks of experience joining composite pipes during the first six months of the certification period is recommended.

#### D.4.5.2 Renewal

To renew the pipe fitter qualification certificate, authenticated evidence relevant to jointing work carried out the previous two years, including information on the type and number of joints prepared, is required. Experience within the last six months in joining composite pipes in accordance with the qualification certificate(s) for which renewal is sought shall be demonstrated.

## D.5 Supervisor for the prefabrication and installation of composite pipes

### D.5.1 Qualifications and experience

The candidate should be fluent in the language in which the course is being conducted.

For acceptance into the supervisor course, the candidate shall have a minimum of 2 years experience in composite pipe jointing and should preferably be in possession of a qualification certificate for a pipe fitter/jointer of composite pipes. The experience of the candidate shall include all the commonly used joining techniques, e.g. adhesive bonding, laminating and various types of mechanical connections.

Other documented evidence of education, training and experience may be considered to give equivalent competence.

Candidates shall be in satisfactory physical condition and shall have eyesight that fulfils the requirements of D.4.2.


© ISO 2002 — All rights reserved
Copyright International Organization for Standardization
Provided by IHS under license with ISO
No reproduction or networking permitted without license from IHS
Not for Resale

### D.5.2 Training

As a minimum, the supervisor training course shall include

a) the supervisor's duties and responsibilities,

b) health and safety aspects,

c) installation check list:

   1) transport and storage,

   2) preparation, assembly and finishing of main joint types,

   3) installation details, e.g. engineering, pipe supports, damage prevention, etc.,

   4) hydrotest and leak test,

   5) repair procedures.

d) inspection of pipe and joints;

e) handling/fitting of pipe.

### D.5.3 Examination and qualification

The candidate shall become qualified as a supervisor on successful completion of

f) attendance at the course,

g) an examination on the topics covered in the course.

### D.5.4 Validity and renewal

#### D.5.4.1 Validity

The supervisor qualification certificate shall be valid for a period of five years from the date of original examination.

#### D.5.4.2 Renewal

For renewal of the supervisor certificate, a minimum of 25 weeks of active work with composite pipe installation during the 5-year certification period is required. Of these, a minimum of 10 weeks shall be within the last 2 years.

## D.6 Inspector for the prefabrication and installation of composite pipes

### D.6.1 Qualifications and experience

The candidate should be fluent in the language in which the course is being conducted. The candidate should be a minimum of 25 years of age, and should fulfil one of the following experience requirements:

— as a qualified GRP supervisor: 1 year of experience;

— as a qualified GRP pipe fitter/jointer: minimum 3 years of experience.

© ISO 2002 – All rights reserved

Copyright International Organization for Standardization
Provided by IHS under license with ISO
No reproduction or networking permitted without license from IHS
Not for Resale

Other documented evidence of education, training and experience may be considered to give equivalent competence. Candidates who do not possess either GRP pipe fitter qualification certificates or GRP supervisor qualification certificates shall be required to complete the requirements of D.4.

Candidates shall be in satisfactory physical condition and shall have eyesight that fulfils the requirements of D.4.2.

## D.6.2 Training

The inspection course shall give a theoretical and practical introduction into the most important elements of inspection of a composite pipe system. The preferred course duration is a minimum of 3 days and it should include, but not be limited to, the following:

a) repetition of elements for the pipe fitter course;

b) inspection of received goods;

c) inspection before, during and after assembly of main joint types;

d) inspection of support;

e) inspection of repair;

f) hydrostatic testing;

g) destructive and non-destructive testing methods;

h) general inspection and the inspector's duties and responsibilities;

i) written procedures, documentation and reporting.

The candidate shall perform five different inspections, including electrical continuity of the main joint types and fittings including pipe-to-fitting as well as pipe-to-pipe joins.

## D.6.3 Examination and qualification

The candidate shall become qualified as an inspector on successful completion of

a) attendance at the course,

b) an examination on the topics covered in the course.

## D.6.4 Validity, renewal and withdrawal of approval

### D.6.4.1 Validity

The inspector qualification certificate shall be valid for a period of 5 years from the date of original examination.

### D.6.4.2 Renewal

For renewal of the inspector qualification certificate, a minimum of 25 weeks of active work with composite pipe installation during the 5-year certification period is required. Of these, a minimum of 10 weeks shall be within the last 2 years.


© ISO 2002 — All rights reserved
Copyright International Organization for Standardization
Provided by IHS under license with ISO
No reproduction or networking permitted without license from IHS
Not for Resale

# Annex E
(informative)

# Guidance on NDE methods

## E.1 General

This annex provides guidance on the NDE methods available for inspecting GRP. Visual inspection remains the most important technique if the resin is transparent, as large areas can be inspected quickly within the laminate. However, some of the most important defects, such as poor bonding, require sophisticated NDE methods and a high degree of operator skill. Further guidance on the application procedures for these methods is given in [5].

## E.2 Visual defects

The main visually detectable defects are

a) deformations and dimensional deviations,

b) surface cracks and microcracks,

c) near-surface delaminations, inclusions and air entrapments,

d) impact damage,

e) blisters,

f) internal excess of adhesive (internal inspection),

g) corrosion and erosion (internal inspection).

## E.3 Pressure testing

The hydrotest is considered to provide the best assurance of a GRP pipe system's integrity, and is more reliable than other NDE techniques for assessing that the system has been properly fabricated and installed. There are two significant drawbacks associated with pressure testing:

— the cost of blinding off systems can be significant, and

— pressure testing is usually done late in the project cycle, when any corrective work can cause commissioning delays.

The main defects detectable by pressure testing are

a) adhesive-bonded joints lacking adhesive or improperly prepared and assembled,

b) inadequately cured adhesive in the bonded joints,

c) manufacturing defects in GRP materials,

d) leaking joints.

© ISO 2002 – All rights reserved

Copyright International Organization for Standardization
Provided by IHS under license with ISO
No reproduction or networking permitted without license from IHS
Not for Resale

A pressure test at 1,5 times the design pressure reveals leaks and such major defects as severe impact damage (e.g. from improper transport), improperly designed or fabricated systems (lacking adequate strength), or very poor adhesive bonding. However, adhesive-bonded joints are designed with a large margin of safety and bonded joints having as much as 80 % unbonded area can pass a pressure test. Thus the pressure test is a major element in ensuring that the GRP pipe system is structurally and functionally adequate, but cannot be viewed as an absolute guarantee of performance.

For critical systems, other NDE methods (e.g. random verification of joint quality using ultrasonics) can be used along with pressure testing to determine the presence of excessive debond or void areas that may have a detrimental effect on service life.

## E.4 Ultrasonic testing

The pulse-echo (PE) method (where one transducer functions as both transmitter and receiver) is the most commonly used ultrasonic test method for GRP. In addition, through-transmission (using two transducers) and impedance plane methods (IPM), where one transducer is used with phase monitoring, have been applied.

The main defects detectable with ultrasonic testing are

a) areas in bonded pipe joints lacking adhesive,

b) delaminations, voids,

c) deviations in wall thickness (20 %).

Voids and areas lacking adhesive can be detected using available ultrasonic methods to resolutions of approximately 10 mm and to depths of 100 mm. Areas of poor adhesion, i.e. little or no adhesion but with joint faces in contact (also known as “kissing bonds”) are not reliably detected by this method. Delaminations can be detected with resolution similar to that for voids. Variations in wall thickness of approximately 20 % can also be detected.

Probe selection should recognize the trade-offs between resolution (typically improved at higher frequencies, i.e. > 2,25 MHz), depth penetration (typically best at lower frequencies, i.e. < 2,25 MHz), signal damping characteristics, and diameter (larger diameters allow higher energy input, but at the expense of spatial definition of defects and successful coupling to curved surfaces). Use of back-wall echoes is recommended for inspecting adhesively bonded joints, since missing adhesive causes the back-wall signal to disappear. The quality of the surface finish affects coupling and ultrasonic results. Results can be improved by use of coupling agents (e.g. water, gels, etc.) or by smoothing the surface. Scanning devices (or multiple point inspections) are recommended due to the uncertainties associated with coupling, surface finish and materials fabrication.

A relatively low frequency, typically between 0,25 MHz and 2,25 MHz, is considered to be best suited for PE ultrasonic testing of GRP if the wall thickness is in the range 8 mm to 25 mm. Reflected pulses in GRP have more complex waveforms and less time separation between the reflected pulses than is the case for steel. Therefore multiple echoes cannot reliably be used in signal interpretation. Two methods for increasing the time between reflected signals are:

a) transmission through flooded GRP pipes with the signal returning from the opposite pipe wall;

b) use of a suitable (e.g. polymethyl methacrylate) stand-off.

## E.5 Radiographic testing

Radiographic testing is not sensitive to surface roughness, but it is sensitive to the orientation of the defect. It is relatively easy to perform onshore, while it is somewhat more complicated on offshore installations because of the need to close off areas while tests are being conducted.


Copyright International Organization for Standardization
Provided by IHS under license with ISO
No reproduction or networking permitted without license from IHS
Not for Resale
© ISO 2002 — All rights reserved

The main defects detectable by radiography include

a) incorrect wall thickness (up to 20 % deviation), or fit between male and female adherends,

b) some voids, delaminations and lack of adhesive (up to 5 % deviation),

c) axial misalignment,

d) excess adhesive on inner wall of pipe at joint,

e) scale build-up on inside of pipe,

f) incorrect insertion of pipes in adhesive sockets.

Areas of poor adhesion, i.e. little or no adhesion but with joint faces in contact, are not reliably detected by this method.

Radiographic test (RT) parameters, i.e. tube voltage and exposure time, should be adjusted to allow for the low density of polymers and composites. Low to medium tube voltages, typically in the range of 10 keV to 50 keV, are suitable. From radiographic test results it is possible to determine wall and laminate (i.e. repair) thicknesses. In some cases it has also been possible to determine the winding angle, voids or lack of adhesive (particularly where these become filled with e.g. water). In general, however, it is very difficult to detect lack of adhesive without modifying the adhesive by adding heavy elements which act as contrast enhancers. $ZnI_2$, $BaSO_4$, PbO and W (at 5 % mass fraction) function well as contrast enhancers.

## E.6 Acoustic emission testing

Standard procedures for performing acoustic emission inspection on GRP materials exist, and should be available from acoustic emission equipment suppliers.

The main defects detectable by acoustic emission testing include

a) inadequate structural integrity (can be caused by weaknesses in design, production, material degradation, etc.),

EXAMPLE 1 Wrong lay-up on laminated joints.

EXAMPLE 2 Underdesigned laminates in areas with multiaxial stresses.

b) growth of delamination cracks,

c) crack growth in matrix material,

d) fibre fracture and pull-out,

e) inadequate curing, leading to excessive strains,

f) leakages.

Acoustic emission requires that the pipe be under load, up to a maximum of the design load. Only growing or propagating defects are detected.

© ISO 2002 – All rights reserved

Copyright International Organization for Standardization
Provided by IHS under license with ISO
No reproduction or networking permitted without license from IHS
Not for Resale

## E.7 Differential scanning calorimetry (DSC) and Barcol hardness testing

The main defects detectable by DSC and Barcol testing are

a) improperly mixed or cured adhesive in bonded joints (DSC),

b) improperly mixed or cured laminate in laminates or laminated joints (Barcol).

DSC is a quantitative, accurate and relatively fast semi-non-destructive technique which is based on the measurements of thermal changes related to phase transitions and chemical reactions, such as the curing of thermosets. Small samples can be cut from the external adhesive seams of the joints for measuring the glass transition temperature, $T_g$, by DSC analysis.

Barcol hardness is an indirect method of measuring the degree of cure in vinyl ester and polyester laminates and laminated joints.

## E.8 Thermographic testing

The main defects detectable by thermography are

a) scale build-up,

b) major deviations in wall thickness,

c) areas in the joint lacking adhesive.

Thermography is an NDE method under development and may be applied for inspection of GRP if reliable calibration standards are established and agreed between the contractor and the principal.


© ISO 2002 — All rights reserved
Copyright International Organization for Standardization
Provided by IHS under license with ISO
No reproduction or networking permitted without license from IHS
Not for Resale

# Annex F
(normative)

# Health and safety

## F.1 Health and safety requirements related to chemical hazards

Smoking, eating and drinking shall be prohibited during handling and storage of resin, paste, adhesives or other chemicals.

Special precautions shall be taken when working in contact with resins, curing agents, catalysts, etc. which can produce irritation if allowed to come into contact with human tissue and can sometimes produce dark spots on clothing. Operators shall therefore observe strict personal hygiene at all times with respect to the handling of these products when in the uncured liquid state.

Peroxide curing agents used in the bonding of vinyl ester and polyester pipework are especially harmful to eyes, and even small quantities can cause permanent damage. Eye protection shall be worn when handling peroxides. Eye protection when handling other curing agents is recommended.

Skin contact shall be prevented by the use of rubber gloves and barrier creams. Any accidentally contaminated skin areas shall be thoroughly washed with soap and water.

In confined spaces, where natural ventilation is poor, the use of oxygen or fresh-air masks is recommended if operators are exposed to noxious gases.

## F.2 Dust hazards

During machining of GRP, the use of a dust mask and protective clothing is recommended in order to prevent inhalation of the glass-fibre dust produced and prevent skin irritation. Machining in a well-ventilated room or in the open air is advised in order to minimize contact with dust. In the workshop, a portable dust extraction unit should be used, with the point of extraction as close as possible to the work.

© ISO 2002 – All rights reserved
Copyright International Organization for Standardization
Provided by IHS under license with ISO
No reproduction or networking permitted without license from IHS
Not for Resale

# Bibliography

[1] CSWIP-GRP-1-96, January 1996, *Installation of composite pipes: Approval of pipe fitters/jointers and supervisors*, TWI Certification Ltd, Abington, Cambridge, UK

[2] CSWIP-GRP-2-96, January 1996, *Installation of composite pipes: Approval of inspectors, TWI Certification Ltd, Abington*, Cambridge, UK

[3] API Spec 15HR, *Specification for high pressure fiberglass line pipe*

[4] NTS GRP *Governing Board (Norway), GRP approval*

[5] NORSOK M-622, *Guideline for NDT of GRP piping systems and tanks*



© ISO 2002 — All rights reserved

Copyright International Organization for Standardization
Provided by IHS under license with ISO
No reproduction or networking permitted without license from IHS

Not for Resale

--`,,```,,,,````-`-`,,`,,`,`,,`---

Copyright International Organization for Standardization
Provided by IHS under license with ISO
No reproduction or networking permitted without license from IHS
Not for Resale

**ICS 75.200; 83.140.30**

Price based on 52 pages

© ISO 2002 – All rights reserved

Copyright International Organization for Standardization
Provided by IHS under license with ISO
No reproduction or networking permitted without license from IHS

Not for Resale