INTERNATIONAL STANDARD

ISO 14692-3

First edition
2002-12-15

Petroleum and natural gas industries — Glass-reinforced plastics (GRP) piping —

Part 3: System design

Industries du pétrole et du gaz naturel — Canalisations en plastique renforcé de verre (PRV) —

Partie 3: Conception des systèmes

Reference number
ISO 14692-3:2002(E)

© ISO 2002

PDF disclaimer

This PDF file may contain embedded typefaces. In accordance with Adobe's licensing policy, this file may be printed or viewed but shall not be edited unless the typefaces which are embedded are licensed to and installed on the computer performing the editing. In downloading this file, parties accept therein the responsibility of not infringing Adobe's licensing policy. The ISO Central Secretariat accepts no liability in this area.

Adobe is a trademark of Adobe Systems Incorporated.

Details of the software products used to create this PDF file can be found in the General Info relative to the file; the PDF-creation parameters were optimized for printing. Every care has been taken to ensure that the file is suitable for use by ISO member bodies. In the unlikely event that a problem relating to it is found, please inform the Central Secretariat at the address given below.

© ISO 2002

All rights reserved. Unless otherwise specified, no part of this publication may be reproduced or utilized in any form or by any means, electronic or mechanical, including photocopying and microfilm, without permission in writing from either ISO at the address below or ISO's member body in the country of the requester.

ISO copyright office
Case postale 56 • CH-1211 Geneva 20
Tel. + 41 22 749 01 11
Fax + 41 22 749 09 47
E-mail copyright@iso.org
Web www.iso.org

Published in Switzerland

© ISO 2002 — All rights reserved

Contents

Page

Introduction vi

1 Scope 1

2 Normative references 1

3 Terms and definitions 1

4 Symbols and abbreviated terms 1

5 Layout requirements 2
5.1 General 2
5.2 Space requirements 2
5.3 System supports 3
5.4 Isolation and access for cleaning 5
5.5 Vulnerability 5
5.6 Joint selection 6
5.7 Fire and blast 7
5.8 Control of electrostatic discharge 8
5.9 Galvanic corrosion 9

6 Hydraulic design 9
6.1 General 9
6.2 Flow characteristics 9
6.3 General velocity limitations 9
6.4 Erosion 10
6.5 Water hammer 10
6.6 Cyclic conditions 11

7 Structural design 11
7.1 General 11
7.2 Manufacturer's pressure rating 11
7.3 Qualified pressure 11
7.4 Factored qualified pressure 12
7.5 System design pressure 13
7.6 Loading requirements 14
7.7 Allowable displacements 16
7.8 Qualified stress 16
7.9 Factored stress 16
7.10 Limits of calculated stresses due to loading 17
7.11 Determination of failure envelope 18

8 Stress analysis 25
8.1 Analysis methods 25
8.2 Analysis requirements 25
8.3 External pressure/vacuum 26
8.4 Thermal loading 27
8.5 Stresses due to internal pressure 27
8.6 Stresses due to pipe support 28
8.7 Axial compressive load (buckling) 29

9 Fire performance 30
9.1 General 30
9.2 Fire endurance 31
9.3 Fire reaction 32
9.4 Fire-protective coatings 32

© ISO 2002 — All rights reserved

Introduction

The objective of this part of ISO 14692 is to ensure that piping systems, when designed using the components qualified in ISO 14692-2, will meet the specified performance requirements. These piping systems are designed for use in oil and natural gas industry processing and utility service applications. The main users of the document will be the principal, design contractors, suppliers contracted to do the design, certifying authorities and government agencies.

An explanation of the pressure terminology used in this part of ISO 14692 is given in ISO 14692-1.

© ISO 2002 — All rights reserved

Petroleum and natural gas industries — Glass-reinforced plastics (GRP) piping —

Part 3:

System design

1 Scope

This part of ISO 14692 gives guidelines for the design of GRP piping systems. The requirements and recommendations apply to layout dimensions, hydraulic design, structural design, detailing, fire endurance, spread of fire and emissions and control of electrostatic discharge.

This part of ISO 14692 is intended to be read in conjunction with ISO 14692-1.

2 Normative references

The following referenced documents are indispensable for the application of this document. For dated references, only the edition cited applies. For undated references, the latest edition of the referenced document (including any amendments) applies.

ISO 14692-1:2002, *Petroleum and natural gas industries — Glass-reinforced plastics (GRP) piping — Part 1: Vocabulary, symbols, applications and materials*

ISO 14692-2:2002, *Petroleum and natural gas industries — Glass-reinforced plastics (GRP) piping — Part 2: Qualification and manufacture*

ISO 14692-4:2002, *Petroleum and natural gas industries — Glass-reinforced plastics (GRP) piping — Part 4: Fabrication, installation and operation*

BS 7159:1989 *Code of practice for design and construction of glass-reinforced plastics (GRP) piping systems for individual plants or sites*

ASTM E1118, *Standard practice for acoustic emission examination of reinforced thermosetting resin pipe (RTRP)*

3 Terms and definitions

For the purposes of this document, the terms and definitions given in ISO 14692-1 apply.

4 Symbols and abbreviated terms

For the purposes of this part of ISO 14692, the symbols and abbreviated terms given in ISO 14692-1 apply.

© ISO 2002 — All rights reserved

5 Layout requirements

5.1 General

GRP products are proprietary, and the choice of component sizes, fittings and material types may be limited depending on the supplier. Potential vendors should be identified early in design to determine possible limitations of component availability. The level of engineering support that can be provided by the supplier should also be a key consideration during vendor selection.

Where possible, piping systems should maximize the use of prefabricated spoolpieces to minimize the amount of site work. Overall spool dimensions should be sized taking the following into consideration:

— limitations of site transport and handling equipment;

— installation and erection limitations;

— limitations caused by the necessity to allow a fitting tolerance for installation ("cut to fit" requirements).

The designer shall evaluate system layout requirements in relation to the properties of proprietary pipe systems available from manufacturers, including but not limited to:

a) axial thermal expansion requirements;

b) ultraviolet radiation and weathering resistance requirements;

c) component dimensions;

d) jointing system requirements;

e) support requirements;

f) provision for isolation for maintenance purposes;

g) connections between modules and decks;

h) flexing during lifting of modules;

i) ease of possible future repair and tie-ins;

j) vulnerability to risk of damage during installation and service;

k) fire performance;

l) control of electrostatic charge.

The hydrotest provides the most reliable means of assessing component quality and system integrity. Whenever possible, the system should be designed to enable pressure testing to be performed on limited parts of the system as soon as installation of those parts is complete. This is to avoid a final pressure test late in the construction work of a large GRP pipe system, when problems discovered at a late stage would have a negative effect on the overall project schedule.

Further guidance about GRP piping system layout is given in Annex A.

5.2 Space requirements

The designer shall take account of the larger space envelope of some GRP components compared to steel. Guidance on fitting sizes is given in Clause 7 of ISO 14692-2:2002. GRP fittings generally have longer lay lengths and are proportionally more bulky than the equivalent metal component and may be difficult to

© ISO 2002 — All rights reserved

accommodate within confined spaces. If appropriate, the problem can be reduced by fabricating the pipework as an integral spoolpiece in the factory rather than assembling it from the individual pipe fittings.

If space is limited, consideration should be given to designing the system to optimize the attributes of both GRP and metal components.

5.3 System supports

5.3.1 General

GRP piping systems can be supported using the same principles as those for metallic piping systems. However, due to the proprietary nature of piping systems, standard-size supports will not necessarily match the pipe outside diameters. The use of saddles and elastomeric pads may allow the use of standard-size supports.

The following requirements and recommendations apply to the use of system supports.

a) Supports shall be spaced to avoid sag (excessive displacement over time) and/or excessive vibration for the design life of the piping system.

b) In all cases, support design should be in accordance with the manufacturer's guidelines.

c) Where there are long runs, it is possible to use the low modulus of the material to accommodate axial expansion and eliminate the need for expansion joints, provided the system is well anchored and guided.

d) Valves or other heavy attached equipment shall be independently supported.

NOTE Valves are often equipped with heavy control mechanisms located far from the pipe centreline and can cause large bending and torsional loads.

e) GRP pipe shall not be used to support other piping, unless agreed with the principal.

f) GRP piping should be adequately supported to ensure that the attachment of hoses at locations such as utility or loading stations does not result in the pipe being pulled in a manner that could overstress the material.

g) Consideration shall be given to the possible design requirements of the support to provide electrical earthing in accordance with the requirements of 5.8 and clause 10.

Pipe supports can be categorized into those that permit movement and those that anchor the pipe.

5.3.2 Pipe-support contact surface

5.3.2.1 Guidelines

The following guidelines to GRP piping support should be followed.

a) Supports in all cases should have sufficient width to support the piping without causing damage and should be lined with an elastomer or other suitable soft material. The minimum saddle width, in millimetres, should be $\sqrt{30D}$, where D is the mean diameter of the pipe, in millimetres.

b) Clamping forces, where applied, should be such that crushing of the pipe does not occur. Local crushing can result from a poor fit and all-round crushing can result from over-tightening.

c) Supports should be preferably located on plain-pipe sections rather than at fittings or joints.

d) Consideration shall be given to the support conditions of fire-protected GRP piping. Supports placed on the outside of fire protection could result in loads irregularly transmitted through the coating, which could result in shear/crushing damage and consequent loss of support integrity.

© ISO 2002 — All rights reserved

5.3.2.2 Supports permitting pipe movement

Pipe resting in fixed supports that permit pipe movement shall have abrasion protection in the form of saddles, elastomeric materials or sheet metal.

5.3.2.3 Supports anchoring pipe

The anchor support shall be capable of transferring the required axial loads to the pipe without causing overstress of the GRP pipe material. Anchor clamps are recommended to be placed between two double 180° saddles, adhesive-bonded to the outer surface of the pipe. The manufacturer's standard saddles are recommended and shall be bonded using standard procedures.

5.3.3 Support and guide spacing

The spanning capability of GRP piping spans is generally less than that for steel pipe, due to the lower modulus of the material. Supports shall be spaced to avoid sag (excessive displacement over time) and/or excessive vibration for the design life of the piping system.

GRP pipes, when filled with water, should be capable of spanning at least the distances specified in Table 1 while meeting the deflection criterion of 0,5 % of span or 12,5 mm centre, whichever is smaller. Spans are assumed to be simply supported. In some cases, bending stresses or support contact stresses may become a limiting factor (see 8.6), and the support spacing may have to be reduced.

Table 1 — Guidance to span lengths (simply supported)

Pipe nominal diameter mm	Span m
25	2,0
40	2,4
50	2,6
80	2,9
100	3,1
150	3,5
200	3,7
250	4,0
300	4,2
350	4,8
400	4,8
450	4,8
500	5,5
600 ≥	6,0

Larger spans are possible, and the designer should verify that stresses are within allowable limits according to 8.6. The designer shall take into consideration the effect of buckling (8.7). The effect of temperature on the axial modulus of the GRP material shall also be considered.

© ISO 2002 — All rights reserved

5.4 Isolation and access for cleaning

The designer should make provision for isolation and easy access for maintenance purposes, for example for removal of scale and blockages in drains. The joint to be used for isolation or access should be shown at the design stage and should be located in a position where the flanges can in practice be jacked apart, e.g. it should not be in a short run of pipe between two anchors.

5.5 Vulnerability

5.5.1 Point loads

Point loads should be minimized and the GRP piping locally reinforced where necessary.

5.5.2 Abuse

The designer should give consideration to the risk of abuse to GRP piping during installation and service and the need for permanent impact shielding.

Sources of possible abuse include:

a) any area where the piping can be stepped on or used for personnel support;

b) impact from dropped objects;

c) any area where piping can be damaged by adjacent crane activity, e.g. booms, loads, cables, ropes or chains;

d) weld splatter from nearby or overhead welding activities.

Small pipe branches (e.g. instrument and venting lines), which are susceptible to shear damage, should be designed with reinforcing gussets to reduce vulnerability. Impact shielding, if required, should be designed to protect the piping together with any fire-protective coating.

NOTE Further guidance on the design of gussets can be found in BS 4994 [1].

5.5.3 Dynamic excitation and interaction with adjacent equipment and piping

The designer should give consideration to the relative movement of fittings, which could cause the GRP piping to become overstressed. Where required, consideration shall be given to the use of flexible fittings.

The designer should ensure that vibration due to the different dynamic response of GRP (as compared with carbon steel piping systems) does not cause wear at supports or overstress in branch lines. The designer should ensure that the GRP piping is adequately supported to resist shock loads that may be caused by transient pressure pulses, e.g. operation of pressure safety valves, valve closure etc.

5.5.4 Effect of external environment

5.5.4.1 Exposure to light and ultraviolet radiation (UV)

Where GRP pipe is exposed to the sun, the designer should consider whether additional UV protection is required to prevent surface degradation of the resin. If the GRP is a translucent material, the designer should consider the need to paint the outside to prevent possible algae growth in slow-moving water within the pipe.

5.5.4.2 Low temperatures and requirements for insulation

The designer shall consider the effects of low temperatures on the properties of the pipe material, for example the effect of freeze/thaw. For liquid service, the designer should pay particular attention to the freezing point of

© ISO 2002 — All rights reserved

the internal liquid. For completely filled lines, solidification of the internal fluid may cause an expansion of the liquid volume, which could cause the GRP pipe to crack or fail. For water service, the volumetric expansion during solidification or freezing is more than sufficient to cause the GRP pipe to fail.

The pipe may require to be insulated and//or fitted with electrical surface heating to prevent freezing in cold weather or to maintain the flow of viscous fluids. The designer shall give consideration to:

a) additional loading due to mass and increased cross-sectional area of the insulation;

b) ensuring that electrical surface heating does not raise the pipe temperature above its rated temperature.

Heat tracing should be spirally wound onto GRP pipe in order to distribute the heat evenly round the pipe wall. Heat distribution can be improved if aluminium foil is first wrapped around the pipe.

5.6 Joint selection

5.6.1 General

Various types of bonded and mechanical joints are available. These tend to be proprietary in nature but can generally be categorized into the following types:

— adhesive-bonded joints;

— laminated joints;

— elastomeric bell-and-spigot sealed joints (with/without locks);

— flanged joints;

— threaded joints;

— metallic/GRP interfaces;

— other mechanical joints.

A description and further guidance about the use of these joint types is given in Annex B. The designer should take into account the following factors when selecting the jointing method:

a) criticality;

b) reliability;

c) ease of joint assembly;

d) ease of repair, and future modifications and tie-ins.

5.6.2 Criticality and reliability

The designer should give consideration to the requirements for evaluating the performance of the joint during service.

The selection of the joint shall take into account the environmental conditions likely to be present during assembly, e.g. temperature and humidity.

The selection of the joint should take into account the presence of significant axial and in-plane axial bending stresses, which are more likely to expose the weakness of poorly made up joints than pressure alone.

© ISO 2002 — All rights reserved

The selection of joint shall take into account possible movement of the pipe caused by flexing of the hull, in the case of a floating offshore installation or flexing of the module during lifting operations.

5.6.3 Ease of joint assembly

The designer should give consideration to ensure the layout enables a site joint to be assembled to the correct dimensions and without the need to pull the joint into position such that the material is subject to overstress.

The selection of site joint should take into account the ease of access required by fitters to assemble the connection correctly. Site joints should be located in accessible locations away from supports and fittings.

The designer should give consideration to the preferred location of the last site joint in a piping loop to ensure the necessary access is available since this joint is often the most difficult to complete.

5.6.4 Ease of repair and access for future modifications and tie-ins

If bell-and-spigot joints are used in locations where future modifications are likely, the designer should consider the need for axial displacement of the pipe to enable the joints to be opened without the need to cut the pipe.

5.6.5 Metallic/GRP interfaces

Interfaces with metallic tanks, vessels, equipment or piping shall be by flanged (i.e. mechanical) connection.

In order to achieve reliable flange sealing, even with relatively low bolt-tensioning, steel-ring-reinforced elastomer gaskets should be used. Only soft type elastomers should be used, preferably with a hardness within the range Shore A 55 to A 75. The gasket material shall match the pressure, temperature and chemical resistance capabilities of the piping system. In general, PTFE envelope-type gaskets are not recommended and should not be used for pipes of large diameters (> 600 mm) and at high pressures (> 3,2 MPa).

The making of connections by other means, e.g. overwrapping of metallic pipe ends with GRP, is not acceptable unless qualified in accordance with 6.2.3.2 in ISO 14692-2:2002.

5.7 Fire and blast

5.7.1 General

The effect of a fire event (including blast) on the layout requirements should be considered. The possible events to be considered in the layout design of a GRP piping system intended to function in a fire include:

a) blast;

b) fire protection of joints and supports;

c) interface with metal fixtures;

d) formation of steam traps;

e) jet fire;

f) heat release and spread of fire;

g) smoke emission, visibility and toxicity.

The methodology for assessing fire performance is given in Clause 9.

© ISO 2002 — All rights reserved

5.7.2 Blast

If components may be exposed to explosion hazards, the effect of blast overpressure, drag forces and projectile impacts should be considered (see 7.6.1), including the possible effect on support spacing.

5.7.3 Steam traps

Consideration should be given to the possibility of steam traps forming in pipe containing stagnant water, which would reduce the conduction of heat away by water.

5.7.4 Jet fires

Jet fires pose a significant threat to all types of piping systems because of the very high heat flux and erosive conditions that they produce. Whilst GRP pipe systems can be designed to withstand jet fires for a required period, the layout should be designed, if possible, to route piping away from areas which could be exposed to direct impingement by a jet fire.

5.7.5 Heat release and spread of fire

Consideration should be given to the contribution to the fire inventory and the risk of surface spread of flame to other areas, particularly if the pipes are empty and/or are no longer in service. The designer should consider the effect of the orientation of the piping and the possibility of thermal feedback from nearby reflective surfaces on the fire performance of the pipe.

5.7.6 Smoke emission, visibility and toxicity

Performance criteria for smoke and toxic emissions are primarily applied to the use of GRP piping in confined spaces, escape routes or areas with limited ventilation and where personnel are at risk. Consideration should be given to the risk of the spread of smoke and toxic emissions to other areas, particularly if the pipes are empty and/or are no longer in service.

5.7.7 Penetrations

Penetrations (wall, bulkhead, deck) shall not weaken the division that they penetrate. The main requirements are to prevent passage of smoke and flames, to maintain structural integrity and to limit the temperature rise on the unexposed side. Penetrations shall therefore comply with the same requirements that apply to the relevant hazardous divisions. This requires the penetration to have been fire-tested and approved for use with the specific type of GRP pipework under consideration.

5.8 Control of electrostatic discharge

GRP piping and associated systems may be required to be electrically conductive/electrostatic dissipative and earthed, depending on service and location.

The location of the pipe determines the magnitude of external electrostatic charge-generation mechanisms to which the pipe may be exposed, and determines the consequences of an incendive discharge. For example, the effect of changing atmospheric electrical fields is mitigated by the shielding provided by metal walkways and decks located above the pipe.

In hazardous areas, the designer should be aware of the proximity of process pipe and other sources of high-pressure gas effluxes that may provide a strong external electrostatic-generation mechanism. The designer should also be aware of other potential sources of electrostatic-generation mechanisms, such as tribocharging and the presence of charged mists and soots produced in tank cleaning operations. In such locations and where practicable, the designer shall minimize the presence of unearthed metal objects attached to the pipe and take into account the proximity of nearby earthed metal objects when considering the risk analysis, see 10.1.

© ISO 2002 — All rights reserved

Further guidance for assessing the requirements for control of electrostatic discharge is given in Clause 10 and Annex G.

5.9 Galvanic corrosion

Galvanic corrosion is unlikely to be a concern at the interface of metal and GRP piping components if the GRP component incorporates small quantities of carbon fibre to provide electrical conductivity. This is because the exposed area of the carbon fibre (the cathode) is likely to be small compared to the adjacent metal component. The converse of a high cathode to anode ratio is usually needed to give rise to rapid corrosion.

However, if GRP components incorporate significant quantities of carbon or other cathodic material, e.g. for additional strengthening purposes, then precautions may be required to electrically isolate the carbon fibre at the interface with the metal component. Under such circumstances, the use of an impressed current from a cathodic protection system is not recommended.

6 Hydraulic design

6.1 General

The aim of hydraulic design is to ensure that GRP piping systems are capable of transporting the specified fluid at the specified rate, pressure and temperature throughout their intended service life. The selection of nominal pipe diameter depends on the internal diameter required to attain the necessary fluid flow consistent with the fluid and hydraulic characteristics of the system.

6.2 Flow characteristics

Fluid velocity, density of fluid, interior surface roughness of pipes and fittings, length of pipes, inside diameter of pipes, as well as resistance from valves and fittings shall be taken into account when estimating pressure losses. Guidance for the calculation of pressure losses is given in ISO 13703 [2]. The smooth surface of the GRP may result in lower pressure losses compared to metal pipe. Conversely the presence of excessive protruding adhesive beads will increase pressure losses.

6.3 General velocity limitations

Concerns that limit velocities in piping systems include:

a) unacceptable pressure losses;

b) prevention of cavitation at pumps and valves;

c) prevention of transient overloads (water hammer);

d) reduction of erosion;

e) reduction of noise;

f) reduction of wear in components such as valves;

g) pipe diameter and geometry (inertia loading).

The designer shall take into account these concerns when selecting the flow velocity for the GRP piping system. For typical GRP installations, the mean linear velocity for continuous service of liquids is between 1 m/s and 5 m/s with intermittent excursions up to 10 m/s. For gas, the mean linear velocity for continuous service is between 1 m/s and 10 m/s with intermittent excursions up to 20 m/s. Higher velocities are acceptable if factors that limit velocities are eliminated or controlled, e.g. vent systems that discharge into the atmosphere.

© ISO 2002 — All rights reserved

6.4 Erosion

6.4.1 General

The following factors influence the susceptibility of GRP piping to erosion damage:

a) fluid velocity;

b) piping configuration;

c) particle size, density and shape;

d) particulate/fluid ratio;

e) onset of cavitation.

The designer shall refer to the manufacturer and consider reducing the velocity if doubts exist on erosion performance.

6.4.2 Particulate content

The erosion properties of GRP are sensitive to the particulate content. The designer shall take into account the likely particulate content in the fluid and reduce the maximum mean velocity accordingly. For GRP, the maximum erosion damage typically occurs at a hard-particle impingement angle of between 45° and 90°, i.e. at bends and tees. At low impingement angles (< 15°), i.e. at relatively straight sections, erosion damage is minimal. Further information on erosion can be found in DNV RP 0501 [3].

6.4.3 Piping configuration

The presence of turbulence generators can have a significant influence on the erosion rate of GRP piping, depending on fluid velocity and particulate content. The designer shall consider the degree of turbulence and risk of possible erosion when deciding the piping configuration. To minimize potential erosion damage in GRP pipe systems, the following should be avoided:

a) sudden changes in flow direction;

b) local flow restrictions or initiators of flow turbulence, e.g. excessive adhesive (adhesive beads) on the inside of bonded connections. Limits for the maximum size of adhesive beads are given in Table 4 of ISO 14692-4:2002.

6.4.4 Cavitation

GRP piping is susceptible to rapid damage by cavitation. Cavitation conditions are created in piping systems more easily than is generally realized, and the general tendency for systems to be designed for high velocities exacerbates the situation further. Potential locations of cavitation include angles at segmented elbows, tees and reducers, flanges where the gasket has been installed eccentrically and joints where excessive adhesive has been applied.

The designer shall use standard methods to predict the onset of cavitation at likely sites, such as control valves, and apply the necessary techniques to ensure that cavitation cannot occur under normal operating conditions.

6.5 Water hammer

The susceptibility of GRP piping to pressure transients and out-of-balance forces caused by water hammer depends on the magnitude of pressure and frequency of occurrence. A full hydraulic surge analysis shall be carried out, if pressure transients are expected to occur, to establish whether the GRP piping is susceptible to water hammer. The analysis shall cover all anticipated operating conditions including priming, actuated

© ISO 2002 — All rights reserved

valves, pump testing, wash-down hoses, etc. Water hammer shall be defined as an occasional load, see 7.6.2.3.

If there is a significant risk of water hammer, the designer shall employ standard techniques to ensure that pressure transients do not exceed the hydrotest pressure.

NOTE A typical cause of water hammer is the fast closing of valves. The longer the pipeline and the higher the liquid velocity, the greater the shock load will be. Shock loading generally induces oscillation in the pipe. Since GRP pipe has a lower axial modulus of elasticity than the equivalent steel pipe, longitudinal oscillations are generally more significant.

6.6 Cyclic conditions

The maximum pressure shall not exceed the design pressure. If the predicted number of pressure or other loading cycles exceeds 7 000 over the design life, then 7.4.4 shall apply.

7 Structural design

7.1 General

The aim of structural design for GRP piping systems is to ensure that they shall perform satisfactorily and sustain all stresses and deformations during construction/installation and throughout their service life. This clause identifies the service design criteria and the loads to which GRP may be subjected. The requirements for the stress analysis are given in Clause 8.

7.2 Manufacturer's pressure rating

The manufacturer's pressure rating provided in product literature is not the same as the qualified pressure, p_q, defined in 7.3 or the system design pressure. The manufacturer's pressure rating is defined as:

$$p_{NPR} = f_2 \cdot f_{3,man} \cdot p_q \quad (1)$$

where f_2 is defined as a load factor (see 7.6.2) and $f_{3,man}$ is a factor based on f_3, chosen by the manufacturer to account for the limited axial load capability of GRP, see 7.10.

f_3 is not a fixed parameter and is strongly dependent on application and p_q of the component. The value of f_3 for a component in a complex piping system, where significant non-pressure stresses can be produced, may be about 0,5. Conversely f_3 may have a value of 0,9 or more if the component is well supported and part of a long pipe run.

Use of the manufacturer's rating shall only be used for guidance purposes. Manufacturers should always provide the value of f_3 used to develop a purchase quotation.

NOTE For GRP pipes with a regression gradient less than 0,03 it may be required to de-rate, p_{qf}, in Equation (5). The derating factor is described in 7.6.2.1.

7.3 Qualified pressure

The qualified pressure, p_q, in megapascals[1)] for pipe and fittings shall be determined using the procedure described in 6.2.2 of ISO 14692-2:2002. The qualified pressure is based on a design life of 20 years. The qualified pressure for service lives other than 20 years shall be determined in accordance with 6.2.7 of ISO 14692-2:2002. The relationship between the qualified pressure and the design pressure for a component is defined in 7.5.

---

1) 1 bar = 0,1 (MPa).

© ISO 2002 — All rights reserved

7.4 Factored qualified pressure

7.4.1 General

The factored qualified pressure is defined as the pressure to be used in determining the safe operating envelope of the GRP pipe or piping system. It takes account of specific service conditions that could not be considered in the qualification programme.

The factored qualified pressure, p_{qf}, in megapascals, for pipe and fittings shall be calculated using Equation (2):

$$p_{qf} = A_1 \cdot A_2 \cdot A_3 \cdot p_q \qquad (2)$$

where

p_q is the qualifed pressure, in megapascals, given in 7.3;

A_1 is the partial factor for temperature, determined in accordance with 7.4.2;

A_2 is the partial factor for chemical resistance, determined in accordance with 7.4.3;

A_3 is the partial factor for cyclic service, determined from 7.4.4.

7.4.2 Design temperature

The effect of temperature on reduction of mechanical properties shall be accounted for by the partial factor A_1, which is determined according to Annex D in ISO 14692-2:2002.

The maximum operating temperature of the piping system shall not exceed the temperature used to calculate the partial factor A_1 of the GRP components. If the operating temperature is less than or equal to 65 °C, then A_1 will generally be equal to 1,0.

The effect of low temperatures on material properties and system performance shall be considered. For service temperatures below 0 °C, the principal should consider the need for additional testing, depending on the resin system. Both qualification as well as additional mechanical tests should be considered.

System components such as nylon locking strips may be susceptible to brittle fracture at low temperature.

NOTE GRP materials do not undergo ductile/brittle transition within the temperature range of this part of ISO 14692, hence, there is no significant abrupt change in mechanical properties at low temperatures. A concern is that at temperatures lower than –35 °C, internal residual stresses could become large enough to reduce the safe operating envelope of the piping system.

7.4.3 Chemical degradation

The effect of chemical degradation of all system components from either the transported medium or the external environment shall be considered on both the pressure and temperature ratings. System components shall include adhesive and elastomeric seals/locking rings, if used, as well as the basic glass fibre and resin materials.

The effect of chemical degradation shall be accounted for by the partial factor A_2 for chemical resistance, which is determined in accordance with Annex D in ISO 14692-2:2002. If the normal service fluid is water, then A_2=1. Reference shall be made to manufacturers' data if available.

NOTE 1 In general, the aqueous fluids specified in the qualification procedures of ISO 14692-2:2002 are amongst the more aggressive environments likely to be encountered. However, strong acids, alkalis, hypochlorite, glycol, aromatics and alcohol can also reduce the properties of GRP piping components; the effect depending on chemical concentration, temperature and resin type.

© ISO 2002 — All rights reserved

NOTE 2 The data from manufacturers' tables are based on experience and laboratory tests at atmospheric pressure, on published literature, raw material suppliers' data, etc. Chemical concentrations, wall stresses, type of reinforcement and resin have not always been taken into account. Therefore the tables can only give an indication of the suitability of the piping components to transport the listed chemicals. In addition, mixtures of chemicals may cause unexpectedly more severe situations.

7.4.4 Fatigue and cyclic loading

Cyclic loading is not necessarily limited to pressure loads. Thermal and other cyclic loads shall therefore be considered when assessing cyclic severity.

If the predicted number of pressure or other loading cycles is less than 7 000 over the design life, the service shall be considered static. If required, the limited cyclic capability of pipe system components can be demonstrated according to 6.4.5 of ISO 14692-2:2002.

If the predicted number of pressure or other loading cycles exceeds 7 000 over the design life, then the designer shall determine the design cyclic severity, R_c, of the piping system. R_c is defined as:

$$R_c = \frac{F_{min}}{F_{max}} \tag{3}$$

where F_{min} and F_{max} are the minimum and maximum loads (or stresses) of the load (or stress) cycle.

The partial factor, A_3, for cyclic service is given by:

$$A_3 = \sqrt{\left(R_c{}^2 + \frac{1}{16}(1 - R_c{}^2)\right)} \times \exp\left[(1 - R_c)\left(1 - \frac{N - 7000}{10^8}\right)\right] \tag{4}$$

where N is the total number of cycles during service life.

This equation is intended for cyclic internal pressure loading only, but may be applied with caution to axial loads provided they remain tensile, i.e. it is not applicable for reversible loading.

7.5 System design pressure

The system design pressure, p_d, shall be less than the maximum allowable pressure for a component given by Equation (5):

$$p_d \leqslant f_2 \cdot f_3 \cdot p_{qf} \tag{5}$$

where

f_2 is as defined in 7.6.2;

f_3 is as defined in 7.10;

p_{qf} is as defined in 7.4.

The system design pressure is limited by the component with the smallest value of f_3. Since the value of f_3 is dependent on the magnitude of axial stress, the component with the smallest f_3 cannot be determined until after the system stress analysis has been completed.

NOTE 1 It is not necessary to calculate the value of f_3 if the design stresses are compared to the failure envelope as described in 7.11.

NOTE 2 For GRP pipes with a regression gradient less than 0,03 it may be required to de-rate p_{qf} in Equation (5). The derating factor is described in 7.6.2.1.

© ISO 2002 — All rights reserved

7.6 Loading requirements

7.6.1 Applied loads

The design of piping systems shall represent the most severe anticipated conditions experienced during installation and within the service life of the system. Designers shall consider the loads given in Table 2 that can potentially be experienced by the piping system during the anticipated service life. Live loadings typically include, but are not limited to, the mass of the transported medium.

In some circumstances, changes in ambient temperature can be more important than temperature changes in the fluid. The mean temperature change of the pipe wall should then be taken as the full temperature difference between the applicable ambient temperature and the operating temperature. In addition, the effect of extreme transient temperatures, such as adiabatic cooling, shall also be considered.

The designer shall take account of possible mechanical and thermal loads that may be applied to GRP pipe by crude oil and ballast water during concrete pouring and setting construction activities of gravity-based structures.

The designer shall consider the effect of the predicted blast overpressures determined from the risk assessment. The effect of blast overpressure shall be determined using analytical techniques.

7.6.2 Part factor for loading

7.6.2.1 General

The purpose of the part factor f_2 is to define an acceptable margin of safety between the strength of the material and the operating stresses for the three load cases, occasional, sustained including and sustained excluding thermal loads. Table 3 provides default values for f_2 based on 7.6.2.2 and 7.6.2.3. For most GRP pipe systems an acceptable margin of safety is obtained by defining the long-term factored design envelope (Figure 1, Key item 7) as f_2 times the idealized long-term envelope (Figure 1, Key item 5). For GRP pipe systems that have a flat regression curve ($G < 0{,}03$), a further assessment of the margin of safety is recommended. For these systems the ratio of average short-term burst pressure to design pressure is less than 2,5. It shall be agreed between the principal and the manufacturer whether it is acceptable or not to allow this ratio to be less than 2,5. If this ratio is unacceptable, then the idealized long-term envelope shall be de-rated by the ratio $1{,}44 \cdot p_{LCL}/p_{STHP}$ (see 6.2.4 of ISO 14692-2:2002).

7.6.2.2 Part factor for sustained loading

The part factor for sustained loading, f_2, to be used in the assessment of sustained loads, shall be determined taking into account operating conditions and risk associated with the pipe system. The value to be applied for specific piping systems shall be specified by the user. Because of the self-limiting nature of loads related to thermal expansion, the part factor f_2 to be used in the assessment of sustained loads including thermal effects could be larger than the factor for the assessment of sustained loads excluding thermal effects.

© ISO 2002 — All rights reserved

Table 2 — Loads experienced by a GRP piping system

Sustained loads	Occasional loads
Internal, external or vacuum pressure, hydrotest	Water hammer, transient equipment vibrations, pressure safety-valve releases
Piping self-mass, piping insulation mass, fire protection mass, transported medium mass, buoyancy, other system loads	Impact
Inertia loads due to motion during operation Displacement of supports caused by flexing of the hull during operations	Inertia loads due to motion during transportation Earthquake-induced horizontal and vertical forces, where appropriate Displacement of supports caused by flexing during lifting
Thermal induced loads, electric surface heating	Installation loads, lifting loads, transportation loads
Environmental loads, ice	Adiabatic cooling loads
Encapsulation in concrete	Earthquake, wind
Soil loads (burial depth)	Blast over-pressures
Soil subsidence	

Table 3 — Default values for f_2

Loading type	Load duration	f_2	Example of loading type
Occasional	Short-term	0,89	Hydrotest
Sustained including thermal loads	Long-term	0,83	Self-mass plus thermal expansion
Sustained excluding thermal loads	Long- term	0,67	Self-mass

Consequently the assessment of sustained loading shall be carried out in the following two stages:

a) assessment of sustained loading excluding thermal effects

   Unless otherwise specified by the user, the part factor, f_2, used for the evaluation of sustained loads excluding thermal effects shall be taken as 0,67.

b) assessment of sustained loading including thermal effects.

   Unless otherwise specified by the user, the part factor, f_2, used for the evaluation of sustained loads including thermal effects shall be taken as 0,83.

7.6.2.3 Part factor for occasional loads

The part factor f_2 to be used in the assessment of the combination of sustained loads such as pressure, and mass, and occasional loadings such as water hammer, wind or earthquake or blast loading shall be determined taking into account operating conditions and risk associated with the pipe system. The value to be applied for specific piping systems shall be specified by the user. Unless otherwise specified by the user, the part factor f_2 shall be taken as $1,33 \times 0,67 = 0,89$ for evaluation of this case.

Wind, earthquake, water hammer or blast loading need not be considered acting concurrently but shall be considered in combination with sustained loads excluding thermal effects. Hydrotesting shall be considered an occasional load.

© ISO 2002 — All rights reserved

7.6.3 External pressure/vacuum

Pipe and fittings shall have sufficient stiffness to resist vacuum and/or external pressure loads. The minimum stiffness shall be sufficient to resist a short-term vacuum (e.g. by the operation of an upstream valve) with a safety factor F_e of 1,5.

Piping susceptible to long-term vacuum and/or external pressure loads shall have a stiffness sufficient to resist the induced load with a safety factor F_e of 3,0.

7.7 Allowable displacements

7.7.1 Deflection

Deflections shall not exceed 12,5 mm or 0,5 % of span length or support spacing, whichever is smaller.

If the manufacturer's minimum spacings for support are not exceeded, then deflections shall be within these allowable limits. It should be agreed between the principal and the manufacturer that the quoted minimum spacings for support do not result in deflections greater than prescribed.

7.7.2 Ovalization

Ovalization relative to pipe diameter shall not exceed 5 %.

7.8 Qualified stress

The pipe shall have been assigned a qualified stress, σ_{qs}, expressed in megapascals, by the manufacturer in accordance with Equation (6).

$$\sigma_{qs} = p_q \times \frac{D}{2t_r} \tag{6}$$

where

p_q is the qualified pressure, in megapascals;

D is the average diameter of the pipe, in millimetres;

t_r is the average reinforced wall thickness of the pipe, in millimetres.

The qualified stress, σ_{qs}, for fittings shall be calculated using Equation (7):

$$\left(\frac{\sigma_{qs}}{p_q}\right)_{fitting} = \left(\frac{\sigma_{qs}}{p_q}\right)_{pipe} \tag{7}$$

7.9 Factored stress

The factored stress, σ_{fs}, in megapascals, for plain pipe shall be calculated using either Equation (8) or Equation (9):

$$\sigma_{fs} = \sigma_{qs} \cdot A_1 \cdot A_2 \cdot A_3 \tag{8}$$

where

A_1 is the partial factor for temperature;

A_2 is the partial factor for chemical resistance;

© ISO 2002 — All rights reserved

A_3 is the partial factor for cyclic service;

σ_{qs} is the qualified stress, in megapascals.

$$\sigma_{fs} = \frac{p_{qf} \cdot D}{2t_r} \tag{9}$$

where p_{qf} is the factored qualified pressure, in megapascals, determined from 7.4 and D and t_r are as defined in 7.8.

The factored stress, σ_{fs}, for fittings shall be calculated using Equation (10):

$$\left(\frac{\sigma_{fs}}{p_{qf}}\right)_{fitting} = \left(\frac{\sigma_{fs}}{p_{qf}}\right)_{pipe} \tag{10}$$

7.10 Limits of calculated stresses due to loading

The general requirement is that the sum of all hoop stresses, $\sigma_{h,sum}$, and the sum of all axial stresses, $\sigma_{a,sum}$, in any component in a piping system due to pressure, mass and other sustained loadings, and of the stresses produced by occasional loads such as wind, blast or earthquake shall not exceed values defined by the factored long-term design envelope, see 7.11.

If the sum of these stresses lies outside the factored long-term design envelope, then the pipe of next higher rated pressure shall be chosen from the product family, and the stress calculation repeated until the sum of the stresses lies within the factored long-term design envelope. The procedure for determining the long-term design envelope is given in 7.11.

If the magnitude of non-pressure-induced axial stress is known, Equation (11) can be used to determine the allowable hoop stress, $\sigma_{h,sum}$, in megapascals.

$$\sigma_{h,sum} \leqslant f_2 \cdot f_3 \cdot \sigma_{fs} \tag{11}$$

where

σ_{fs} is as defined in 7.9;

f_2 is the part factor for loading and shall be determined in accordance with 7.6.2;

f_3 is the part factor for axial load and shall be calculated using Equations (13) or (14).

Part factor f_3 is dependent on the value of the biaxial stress ratio r such that:

$$r = 2 \cdot \frac{\sigma_{sa(0:1)}}{\sigma_{sh(2:1)}} \tag{12}$$

where

$\sigma_{sh(2:1)}$ is the short-term hoop strength, in megapascals, under 2:1 stress conditions;

$\sigma_{sa(0:1)}$ is the short-term axial strength, in megapascals, under axial loading only.

The biaxial stress ratio r is as defined in 6.2.6 of ISO 14692-2:2002. In the absence of data from the manufacturer, the default values given in 7.11.4 shall be used.

© ISO 2002 — All rights reserved

Part factor f_3 is defined according to whether r is greater than or less than 1.

if $r \leqslant 1$ then

$$f_3 = 1 - \frac{2\sigma_{ab}}{r \times f_2 \times \sigma_{fs}} \tag{13}$$

if $r > 1$ then

$$f_3 = r - \frac{2\sigma_{ab}}{f_2 \times \sigma_{fs}} \tag{14}$$

where σ_{ab} is the non-pressure-induced axial stress, in megapascals, see Figure 1.

The maximum allowable value of f_3 shall be unity. When the sustained axial stress, excluding that due to pressure, σ_{ab}, is compressive, f_3 is equal to 1.

The procedures for calculating part factor f_3 are applicable to both pipe and fittings. For the purposes of the calculation of part factor f_3 for fittings, an equivalent qualified stress, σ_{fs}, is determined using Equation (10).

7.11 Determination of failure envelope

7.11.1 General

This subclause describes how the failure envelope of the GRP pipe components can be determined to meet the requirements of 7.10. Two design options are defined, depending of the availability of measured data, which can be either a fully measured envelope, 7.11.2 or a simplified envelope, 7.11.3.

The fully measured envelope is generally only available for plain pipe. For all other component variants, the simplified envelope should be used. The least conservative procedure is the fully measured envelope.

NOTE For filament-wound GRP pipes, the design approach adopted by most manufacturers is to optimize performance for the 2:1 pressure condition (system with closed ends). Therefore the hoop strength is significantly greater than the axial strength.

7.11.2 Fully measured envelope

The long-term envelope is derived from a fully measured short-term envelope according to the procedures given in Annex C of ISO 14692-2:2002. The idealized long-term failure envelope, Figure 1, is geometrically similar to the short-term envelope, with all three data points being scaled according to f_{scale}, where;

$$f_{scale} = \frac{\sigma_{qs}}{\sigma_{sh(2:1)}} \tag{15}$$

where

σ_{qs} is the qualified stress, in megapascals;

$\sigma_{sh(2:1)}$ is the short-term hoop strength at 2:1 stress ratio, in megapascals.

The non-factored long-term design envelope is based on this idealized long-term envelope multiplied by an appropriate part factor, f_2, 7.6.2, depending on loading type.

The factored long-term design envelope is defined according to Equation (16):

$$g_{long}(\sigma_{h,sum}, \sigma_{a,sum}) \leqslant f_2 \cdot f_{scale} \cdot A_1 \cdot A_2 \cdot A_3 \cdot g_{short}(\sigma_{sh(2:1)}, \sigma_{sa(0:1)}) \tag{16}$$

© ISO 2002 — All rights reserved

where

A_1	is the partial factor for temperature;
A_2	is the partial factor for chemical resistance;
A_3	is the partial factor for cyclic service;
σ_{ab}	is the non-pressure-induced axial stress;
σ_{ap}	is the axial stress due to internal pressure;
$\sigma_{a,sum}$	is the sum of all axial stresses, in megapascals;
$\sigma_{h,sum}$	is the sum of all hoop stresses, in megapascals, (pressure plus system design);
$g_{long}(\sigma_{h,sum}, \sigma_{a,sum})$	is the shape of the factored long-term design envelope;
$g_{short}(\sigma_{sh(2:1)}, \sigma_{sa(0:1)})$	is the shape of the idealized short-term envelope.

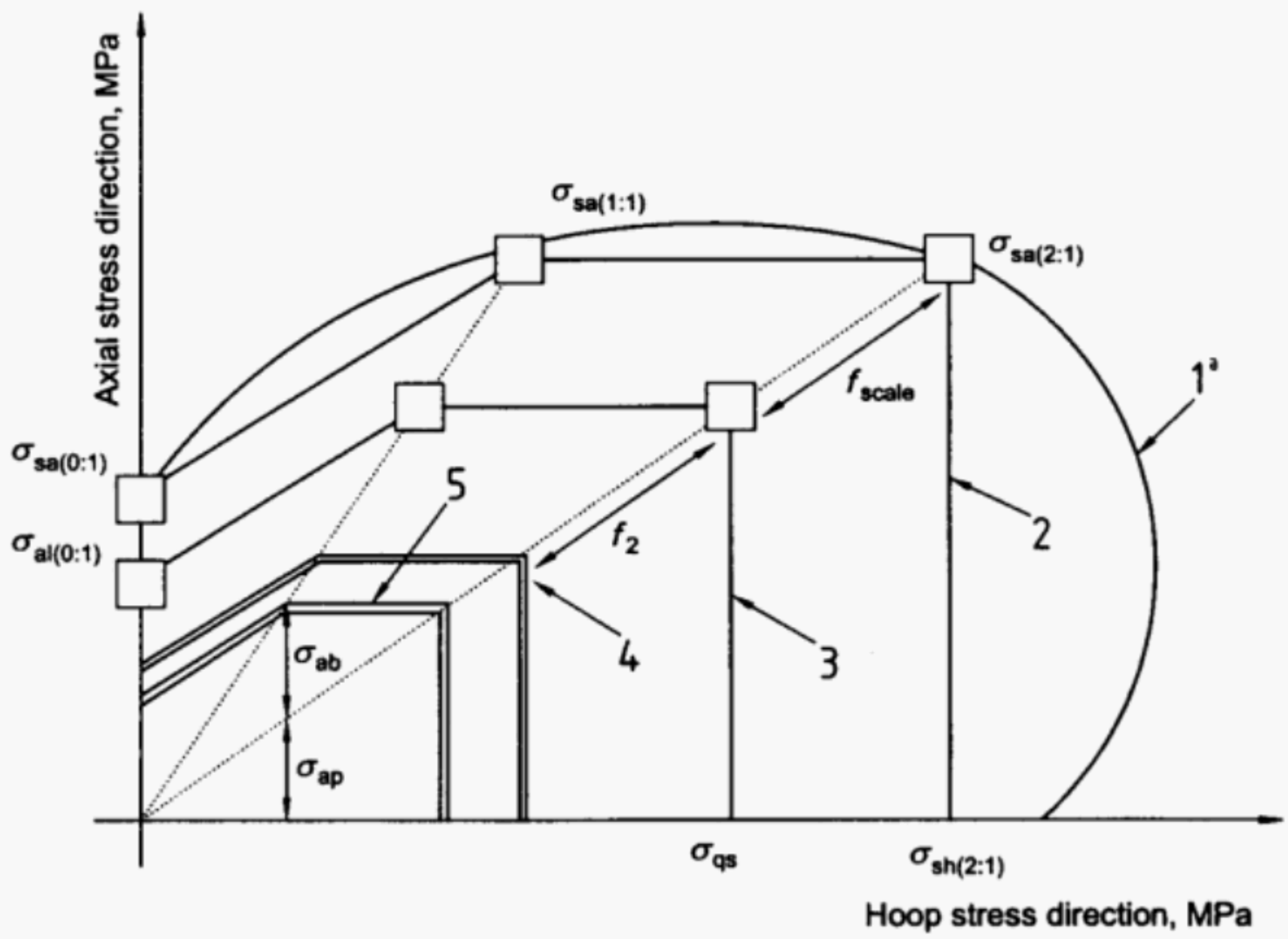

Key

1 schematic representation of the short-term failure envelope
2 idealized short-term envelope
3 idealized long-term envelope
4 non-factored long-term design envelope
5 factored long-term design envelope

[a] For design purposes, the shape should be based on actual measured data points.

Figure 1 — Idealized long-term envelope for a single wound angle ply GRP pipe with winding angles in the range of approximately 45° to 75°

© ISO 2002 — All rights reserved

7.11.3 Simplified envelope

7.11.3.1 General

This method makes use of the biaxial strength ratio r, which is the ratio of axial stresses at 0:1 and 2:1 stress ratios determined in 6.2.6 of ISO 14692-2:2002.

If a value of r for a component is unavailable, the default value given in 7.11.4 should be used.

7.11.3.2 Plain pipe

Figure 2 shows short- and long-term failure envelopes for a single wound angle ply GRP pipe with winding angle in the range ± 45° to 75° where the value of r can be expected to be less than 1. If r is greater than 1, e.g. hand lay-up pipe, 7.11.3.3 applies.

The idealized long-term failure envelope is geometrically similar to the short-term envelope and is derived according to Equation (17) or (18):

$$\sigma_{al(0:1)} = \sigma_{sa(0:1)} \times \frac{\sigma_{qs}}{\sigma_{sh(2:1)}} \tag{17}$$

or

$$\sigma_{al(0:1)} = r \times \frac{\sigma_{qs}}{2} \tag{18}$$

where

σ_{qs} is the qualified stress, in megapascals;

$\sigma_{al(0:1)}$ is the long-term axial (longitudinal) strength at 0:1 stress ratio, in megapascals;

$\sigma_{sa(0:1)}$ is the short-term axial strength at 0:1 stress ratio, in megapascals;

$\sigma_{sh(2:1)}$ is the short-term hoop strength at 2:1 stress ratio, in megapascals;

r is derived according to Equation (12).

The important feature of Figure 2 is that the axial tensile strength, $\sigma_{al(0:1)}$, is lower than the axial stress for the 2:1 internal pressure case, $\sigma_{sa(2:1)}$. The ratio of these strengths can range between 0,5 and 0,75 for plain pipe, depending on winding angle and specific pipe type. The non-factored long-term design envelope is based on this idealized envelope multiplied by an appropriate part factor, f_2, 7.6.2, depending on loading type.

© ISO 2002 — All rights reserved

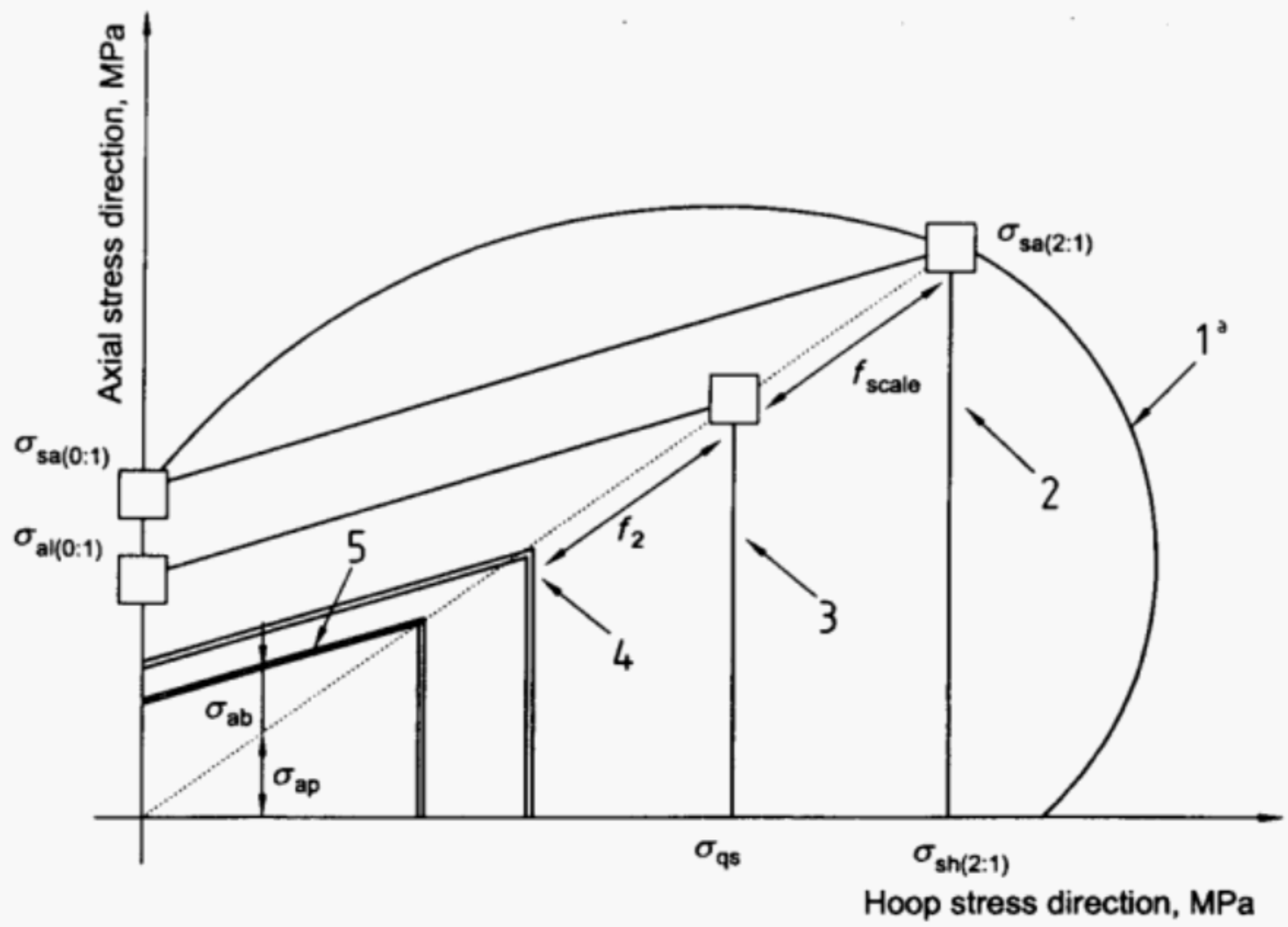

Key

1 schematic representation of the short-term failure envelope

2 idealized short-term envelope

3 idealized long-term envelope

4 non-factored long-term design envelope

5 factored long-term design envelope

a For design purposes, the shape should be based on actual measured data points.

Figure 2 — Short and long-term idealized failure and design envelopes for a single wound angle ply GRP pipe with winding angles in the range of approximately 45° to 75°

The equations for defining the factored long-term design envelope for hoop and axial stress, respectively, are defined such that:

$$\sigma_{h,sum} \leqslant f_2 \cdot A_1 \cdot A_2 \cdot A_3 \cdot \sigma_{qs} \tag{19}$$

or

$$\sigma_{h,sum} \leqslant = f_2 \cdot \sigma_{fs} \tag{20}$$

and

$$\sigma_{a,sum} \leqslant f_2 \cdot A_1 \cdot A_2 \cdot A_3 \left[\left(\frac{\sigma_{qs}}{2} - \sigma_{al(0:1)} \right) \frac{\sigma_{h,sum}}{\sigma_{qs}} + \sigma_{al(0:1)} \right] \tag{21}$$

or

$$\sigma_{a,sum} \leqslant f_2 \cdot A_1 \cdot A_2 \cdot A_3 \left((1-r) \frac{\sigma_{h,sum}}{2} + \frac{r \cdot \sigma_{qs}}{2} \right) \text{ assuming } r \leqslant 1 \tag{22}$$

© ISO 2002 — All rights reserved

where

$\sigma_{a,sum}$ is the sum of all axial stresses, in megapascals;

$\sigma_{h,sum}$ is the sum of all hoop stresses, in megapascals, (pressure plus system design);

σ_{qs} is the qualified stress, in megapascals;

A_1 is the partial factor for temperature;

A_2 is the partial factor for chemical resistance;

A_3 is the partial factor for cyclic service;

σ_{fs} is defined in accordance with Equation (8).

NOTE Equation (19) or (20) and Equation (21) or (22) describe the limits of the factored long-term design envelope in terms of hoop and axial stresses respectively. Both criteria as described by these equations must be satisfied. There is no conflict between these combined equations and Equation (11). In fact, it is possible to demonstrate that by combining Equation (19) or (20) with Equation (21) or (22), Equation (11) results.

7.11.3.3 Pipe plus joint

The idealized long-term failure envelope is rectangular, with the edges determined by the σ_{qs} and the long-term axial strength of the joint, σ_a. The long-term idealized envelope may be either that shown in Figure 3 a) or Figure 3 b), where Figure 3 a) is representative of a joint with quasi-isotropic properties, e.g. laminated joint and Figure 3 b) represents an adhesive joint with anisotropic properties.

In both cases $\sigma_{al(0:1)}$ is defined in accordance with Equation (17).

The non-factored long-term design envelope is based on this idealized envelope multiplied by an appropriate part factor, f_2, 7.6.2, depending on loading type. The factored long-term design envelope is defined in accordance with Equations (19), (20), (21), (22), (23) and (24).

$$\sigma_{a,sum} \leqslant \frac{f_2 \cdot A_1 \cdot A_2 \cdot A_3 \cdot r \cdot \sigma_{qs}}{2} \text{ for } r \geqslant 1 \tag{23}$$

or

$$\sigma_{a,sum} \leqslant f_2 \cdot \sigma_{fs} \cdot \frac{r}{2} \text{ for } r \geqslant 1 \tag{24}$$

7.11.3.4 Fittings

7.11.3.4.1 Bends

The response of bends to pressure-induced axial and bending loads is more complex than the equivalent loads on a straight pipe. Application of a bending moment causes ovalization, resulting in both induced axial and hoop stresses. The shape of the failure envelope depends on the layup configuration of the bend.

For filament-wound bends, the failure envelope is similar to the type shown in Figure 2, i.e. r is less than 1. The potential of applied pressure and bending loads to induce axial as well as hoop stresses results in a conservative approach to defining the long-term strength of a GRP bend.

For bends that are constructed entirely from hand lay-up, the shape of the failure envelope can be considered to be rectangular, with r greater than 1 as shown in Figure 3 a).

The non-factored long-term design envelope is based on this idealized envelope multiplied by an appropriate part factor, f_2, 7.6.2, depending on loading type.

If data are unavailable from the manufacturer, the default values given in 7.11.4 shall be used.

 © ISO 2002 — All rights reserved

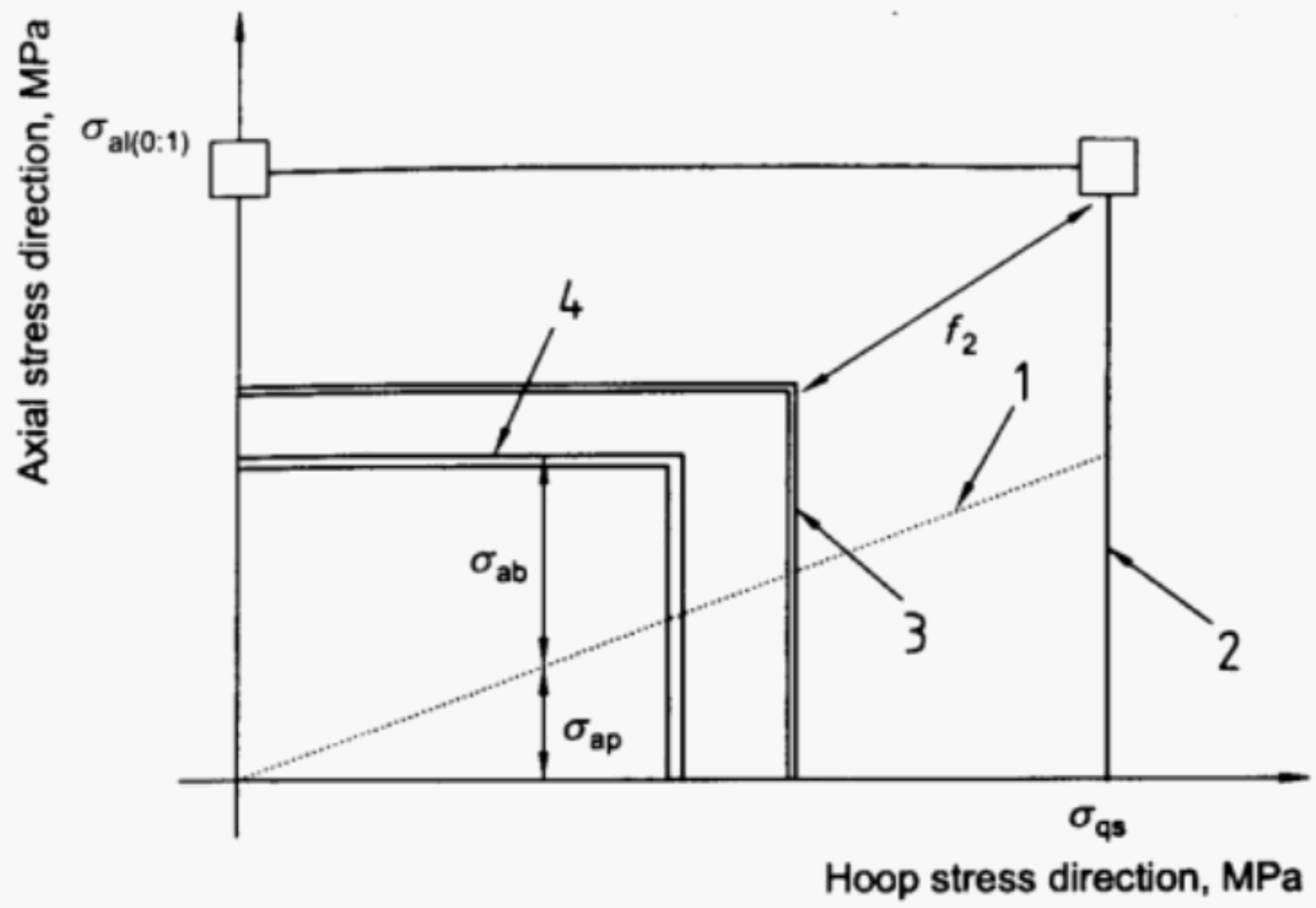

a) Quasi-isotropic GRP joints

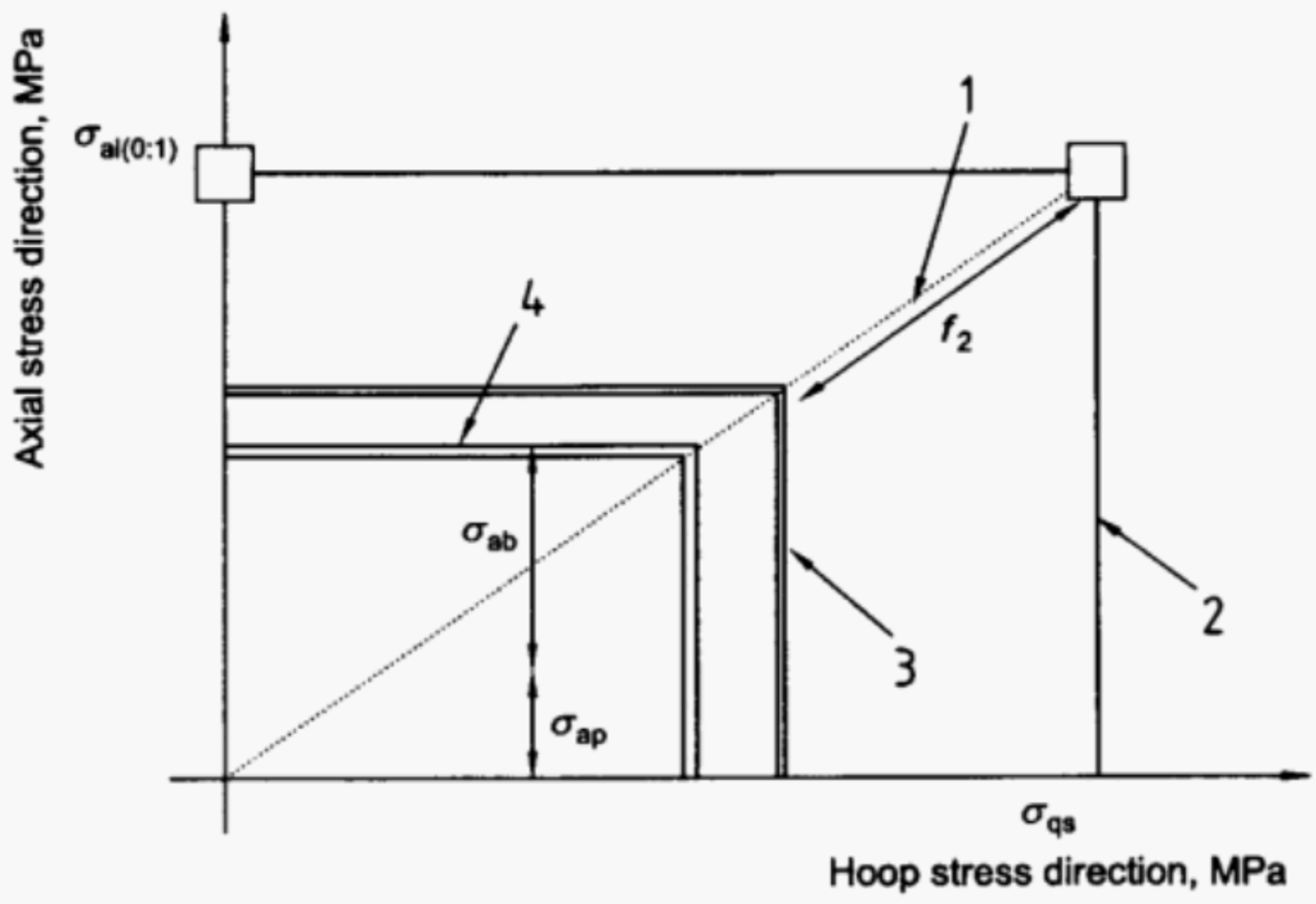

b) Adhesive joints

Key

1 2:1 pressure ratio

2 idealized long-term envelope

3 non-factored long-term design envelope

4 factored long-term design envelope

Figure 3 — Short and long-term idealized failure and design envelopes

© ISO 2002 — All rights reserved

7.11.3.4.2 Tees

At the intersection point of tee sections, stresses and their direction become complex and cannot easily be related to applied pressure and tensile loads. It is the intersection region which governs component performance, and therefore the design envelope for tees is similar to that for joints, 7.11.3.3. That is, failure under tensile load is dominated by axial "pull-out" at the intersection of the pipe and tee, and under pressure is dominated by weepage.

The failure envelope for tees can be considered to be rectangular, as shown in Figure 3 b).

If data are unavailable from the manufacturer, the default values given in 7.11.4 shall be used.

7.11.4 Default values for fittings and joints

The default values for the short-term biaxial strength ratio, r, for fittings and joints are given in Table 4.

NOTE 1 The value of r for plain pipe should always be available from the manufacturer. A typical value for 55° filament-wound glass epoxy pipe is about 0,4, but may be lower for other resin systems and wind angles.

If r is less than 1, the shape of the failure envelope is as shown in Figure 2.

If r is greater than 1, the shape of the failure envelope is rectangular, as shown in Figure 3 a) or Figure 3 b).

NOTE 2 If r is less than 2, e.g. adhesive bond, the joint is limited by axial tensile strength.

Table 4 — Values for the short-term biaxial strength ratio, r, for joints and fittings

Component	Short-term strength biaxial strength ratio r[a]
Fittings:	
Bends: filament-wound unidirectional 90° and ± θ°	0,45
Bends: filament-wound and hand lay	1
Bends: 100 % hand-lay	1,9
Tees: filament-wound and hand lay	1
Other hand-laminated: CSM/WR	1,9
Joints:	
Spigot/socket: adhesive or mechanical connection	1
Threaded	0,45
Flange	1
Laminated	2,0

[a] A higher factor may be used for r if justified by testing in accordance with 6.2.6 in ISO 14692-2:2002.

© ISO 2002 — All rights reserved

8 Stress analysis

8.1 Analysis methods

Either manual or computer methods shall be used for the structural analysis of piping systems. However, the degree of analysis depends on the following factors:

a) pipework flexibility;

b) layout complexity;

c) pipe supports;

d) pipework diameter;

e) magnitude of temperature changes;

f) system criticality and failure risk assessment.

As the pipe diameter increases, the pipework tends to become less flexible and the stress intensification factors at bends and tees increase.

8.2 Analysis requirements

8.2.1 General

The designer shall evaluate the total piping system, inclusive of system criticality and risk of failure due to operating/material factors, in order to assess the need for flexibility/stress analysis. At large diameters, the design of the pipe may be determined more by the support conditions than the internal pressure conditions. Anchor (support) loading shall be checked for acceptability. The information listed in 8.2.2 and 8.2.3, as a minimum, shall be obtained before performing flexibility/stress analysis.

NOTE The dimensions of GRP piping are usually referenced in terms of the inner diameter and wall thickness because of the nature of the manufacturing process.

8.2.2 Installation and design parameters

These parameters include:

a) design and working pressure of the pipe;

b) design and working temperature of the pipe;

c) mass per unit length of pipe component contents;

d) valve types and masses of all valves and other in-line items;

e) routing dimensions;

f) environmental loadings;

g) magnitude of possible support displacement during lifting operations;

h) magnitude of support displacement caused by hull flexure of mobile facilities;

i) acceleration forces and displacements caused by motion of mobile facilities.

© ISO 2002 — All rights reserved

8.2.3 Component properties

These properties include:

a) diameter and wall thickness for all parts of the system;

b) mass per unit length of empty component;

c) axial and hoop expansion coefficient of pipe material;

d) axial and hoop modulus of elasticity of pipe material;

e) Poisson's ratio (axial and hoop);

f) stress intensity factors (S_f) of fittings and bends;

g) flexibility factors of fittings and bends;

h) pressure stress multipliers;

i) allowable stress(es) for the material.

Annex C gives further information about the material properties. The application of stress intensity factors (S_f), flexibility factors, and pressure stress multipliers shall be in accordance with Annex D, or in accordance with procedures agreed with the principal.

8.3 External pressure/vacuum

The designer shall ensure that, where possible, vacuum conditions can be sustained by the selected component.

The external collapse pressure, p_c, in megapascals, of GRP pipes shall be calculated by the following equation which assumes that the length of the pipe is significantly greater than the diameter:

$$p_c = 2\left(\frac{1}{F_e}\right) \cdot E_h \left(\frac{t_r}{D}\right)^3 \tag{25}$$

where

D is the mean pipe diameter of reinforced wall, in millimetres, = ($D_i + 2t - t_r$);

t_r is the average reinforced wall thickness, in millimetres;

t is the nominal wall thickness, in millimetres;

D_i is the pipe inner diameter, in millimetres;

E_h is the hoop modulus, in megapascals;

F_e is the safety factor as defined in 7.6.3.

For thick and sandwich construction walls, the hoop bending modulus should be used in preference to the hoop tensile modulus.

The axial stresses, if compressive, shall be checked with the allowable stresses and checked with the axial buckling criteria given in 8.7.1 and 8.7.2.

© ISO 2002 — All rights reserved

8.4 Thermal loading

Thermally induced loads associated with the maximum operating or ambient temperature range shall be allowed for in the design.

When considering heating or cooling of the uninsulated pipe wall by the fluid contained within the pipe, the mean temperature change of the pipe wall to be used for stress analysis purposes should be calculated using Equation (26).

$$\Delta T_{\text{eff}} = k\,\Delta T_{\text{pa}} \tag{26}$$

where

ΔT_{eff} is the effective design temperature change to be used for stress analysis, in degrees Celsius;

ΔT_{pa} is the temperature difference between ambient temperature and the process design temperature, in degrees Celsius;

k is a factor to account for the low thermal conductivity of GRP (i.e. the average wall temperature of the pipe is always less than the design temperature because of GRP's low thermal conductivity). In the absence of further information, k should be taken as 0,85 for liquids and 0,8 for gases.

The axial stresses shall be checked with the allowable stresses and when the stress is compressive, the stresses shall be checked with the axial buckling criteria given in 8.7.1 and 8.7.2.

8.5 Stresses due to internal pressure

The hoop stress, in megapascals, due to internal pressure for plain pipe shall be calculated using Equation (27):

$$\sigma_{\text{hp}} = \frac{p \cdot D}{2 \cdot t_{\text{r}}} \tag{27}$$

where

p is the pressure, in megapascals;

D is the mean pipe diameter of reinforced wall, in millimetres, = $(D_{\text{i}} + 2t - t_{\text{r}})$;

D_{i} is the pipe inner diameter, in millimetres;

t is the nominal wall thickness, in millimetres;

t_{r} is the average reinforced wall thickness of the pipe, in millimetres.

The equivalent hoop stress, σ_{hp}, for fittings shall be calculated using Equation (28):

$$\left(\frac{\sigma_{\text{hp}}}{p}\right)_{\text{fitting}} = \left(\frac{\sigma_{\text{hp}}}{p}\right)_{\text{pipe}} \tag{28}$$

The axial stress, in megapascals, due to internal pressure for plain pipe shall be calculated using Equation (29):

$$\sigma_{\text{ap}} = \frac{p \cdot D}{4 \cdot t_{\text{r}}} \tag{29}$$

© ISO 2002 — All rights reserved

8.6 Stresses due to pipe support

The designer shall consider the effect of contact stresses at the support of large-diameter liquid-filled pipes, which become more significant with increasing diameter and D/t ratio. The calculation of axial stresses for pipes of diameter more than 0,6 m shall be in accordance with Annex E, or in accordance with procedures agreed with the principal. The magnitude of the stresses can be reduced by the application of local reinforcement at the supports and use of an elastomeric pad to reduce the rigidity of the support conditions.

For gas service and small- and medium-diameter pipes for liquid service, the support stresses are considered insignificant compared to the bending stresses at mid-span. The magnitude of the axial stresses shall be calculated in accordance with Equations (30) and (31) and checked with the appropriate allowable stresses. If the stress is compressive, the stresses shall be checked with the axial buckling criteria given in 8.7.1 and 8.7.2.

Considering a single span simply supported, the additional axial tensile stress due to self-mass induced through bending, σ_{ab} in megapascals, of the GRP pipe shall be calculated using Equation (30).

$$\sigma_{ab} = \frac{M_i\left[(D_i + 2t)/2\right]}{I_p \times 10^6} \tag{30}$$

where

I_p is the second moment of area about an axis through the centroid normal to the pipe axis, in metres^4 (m^4);

$= \frac{\pi}{64}\left[(D_i + 2t)^4 - D_i^4\right]$ which for thin-walled pipes = $\pi D^3 t_r / 8$

D is the mean pipe diameter of reinforced wall, in metres = $(D_i + 2t - t_r)$;

D_i is the pipe inner diameter, in metres;

t is the nominal wall thickness, in metres;

t_r is the average reinforced wall thickness, in metres;

M is the bending moment due to dead weight, one- and two-span beam, in newton metres;

$= \rho_o \times 9{,}81 \times L_s^2 / 8$

where

L_s is the support span, in metres;

ρ_o is the combined pipe and fluid linear mass, in kilograms per metre = $\rho_{eff} \cdot \frac{\pi D_i^2}{4}$

where

ρ_{eff} is the effective density of the combined fluid pipe material, in kilograms per cubic metre = $\left(\rho_L + 4\frac{\rho_c t}{D_i}\right)$;

ρ_c is the density of GRP, in kilograms per cubic metre;

ρ_L is the density of fluid within the pipe, in kilograms per cubic metre (kg/m^3).

© ISO 2002 — All rights reserved

NOTE Equation (30) ignores the effect of the pressure profile produced by the head of fluid within the pipe.

The total axial stress, $\sigma_{a,bp}$, in megapascals, due to internal pressure and bending due to self-mass at the bottom and top of the pipe is given by Equation (31).

$$\sigma_{a,bp} = \frac{p \cdot D}{4 \cdot t_r} \pm \sigma_{ab} \tag{31}$$

The equations used for calculating the deflection due to dead weight (pipe and fluid mass) shall be

$$\delta = (5 \times \rho_0 \times 9{,}81 \times L_s^4 \times 10^{-3})/(K_s \times E_a \times I_p) \tag{32}$$

where

δ is the deflection due to dead weight, in millimetres, one-and two-span beam and anchored beam;

K_s is the the support type factor, (dimensionless);

= 384 for single span beam (two supports);

= 925 for two span beam (three supports);

= 1 920 for anchored beam (two fixed supports built-in at both ends);

E_a = axial flexural (bending) modulus at design temperature, in megapascals.

8.7 Axial compressive load (buckling)

8.7.1 Shell buckling

The axial elastic buckling stress, σ_u, in megapascals, for a cylinder in pure bending may be taken as:

$$\sigma_u = 0{,}90 \times \beta \frac{E_{eff} t_r}{D} \tag{33}$$

where

D is the mean pipe diameter of reinforced wall, in metres = $(D_i + 2t - t_r)$;

D_i is the pipe inner diameter, in metres;

t is the nominal wall thickness, in metres;

t_r is the average reinforced wall thickness, in metres;

$E_{eff} = \sqrt{E_a \cdot E_h}$

E_a is the axial modulus, in megapascals;

E_h is the hoop modulus, in megapascals;

β = $0{,}188\,7 + 0{,}811\,3\beta_0$

The value β_0 is obtained from:

$$\beta_0 = \frac{0{,}83}{\sqrt{0{,}1 + 0{,}005(D_i / t_r)}} \tag{34}$$

© ISO 2002 — All rights reserved

The ratio of the buckling stress to the maximum axial stress shall be greater than 3.

NOTE Shell buckling is primarily an issue for thin-walled large-diameter pipe.

8.7.2 Euler buckling

For axial compressive system loads, e.g. constrained thermal expansion or vertical pipe runs with end compressive loads, and a given length of unsupported pipe, L in metres, the axial compressive load should not exceed $F_{a,max}$ in newtons, defined using the following formula where the moment of inertia has been approximated to $\pi D^3 t_r / 8$.

$$F_{a,max} = \frac{\pi^3 D^3 t_r}{8L^2} E_a \times 10^6 \tag{35}$$

where

E_a is the axial modulus, in megapascals;

L is the length of unsupported pipe, in metres;

D is the mean pipe diameter of reinforced wall, in metres $= (D_i + 2t - t_r)$;

D_i is the pipe inner diameter, in metres;

t is the nominal wall thickness, in metres;

t_r is the average reinforced wall thickness, in metres;

The equivalent buckling stress, in megapascals, is given by Equation (36).

$$\sigma_u = \frac{F_{a,max}}{\pi D \cdot t_r} \times 10^{-6} \tag{36}$$

The ratio of the buckling stress to the maximum axial stress shall be greater than 3.

9 Fire performance

9.1 General

The designer shall determine the fire performance requirements of the piping system. Fire performance is characterized in terms of the following properties:

a) fire endurance;

b) fire reaction.

Fire endurance is the ability of an element of the structure or component to continue to perform its function as a barrier or structural component during the course of a fire for a specified period of time.

Fire reaction properties are material-related and concerned with time to ignition; the surface flame spread characteristics including smouldering and post-fire-exposure flaming; and the rate of heat, smoke and toxic gas release.

If piping cannot satisfy the required fire endurance or fire reaction properties, the designer shall consider alternative options which include:

© ISO 2002 — All rights reserved

— re-routing of pipe to reduce or eliminate the fire threat;

— use of alternative materials;

— application of a suitable fire-protective coating.

If a fire-protective coating is used, the designer shall take into consideration the reliability by which the coating can be applied and its ability to maintain its properties over service lifetime.

Guidance on the influence of piping layout on the fire performance of the system is given in 5.7. The effect of blast overpressure is treated in 7.6.1.

9.2 Fire endurance

The fire protection requirements for piping shall be evaluated from the total endurance time established in the safety case for the facility and/or requirements for asset protection. The designer shall consider the alternative use of protective shielding, particularly if the severest fire threat, for example a jet fire, concerns just a small proportion of pipe.

The fire endurance of GRP piping components shall be determined using the appropriate method in Annex E of ISO 14692-2:2002 as agreed between the principal and the authority having jurisdiction. Guidance on the quantification of appropriate fire endurance properties is given in Annex F.

The designer shall also take into consideration the following factors:

a) orientation of the piping and fittings;

b) fluid conditions inside the pipe, i.e. dry, stagnant or flowing;

c) possibility of the formation of steam traps within the pipe, i.e. local removal of the cooling effect provided by water;

d) fire performance of penetrations;

e) interface with metal fittings (e.g. valves, support clamps) that may provide a path for heat conduction into the GRP component. Consideration shall be given to applying fire-protective coatings;

f) risk of premature failure of the supports in a fire, which could subject the pipe to additional stresses;

g) length of support span compared to the length used to qualify the fire performance in Annex E of ISO 14692-2:2002. If necessary, the designer shall reduce the span or provide additional wall thickness to ensure the piping can maintain its integrity while subject to self-weight in a fire.

The designer shall assign the required fire performance of the piping system according to the fire resistance classification code designated by a three-field number given in Table 7 of ISO 14692-2:2002. Here, service function A, fire type B and performance C are assigned prescribed levels in decreasing order of severity. For completeness, the fire classification code includes service conditions which may be outside the scope of this part of ISO 14692. It is not necessary for the entire piping system to have the same fire classification. The designer may assign more than one fire classification code requirement according to location, etc. Examples of classification codes are given in F.7. The design of a GRP pipe system that has no fire-protective coating and which is intended to function in a fire shall include provision for loss of structural wall thickness.

NOTE GRP is able to provide substantial fire resistance over a prolonged period of time because pyrolysis of the resin, which is an endothermic reaction, absorbs heat from the fire and delays temperature rise. It also enables an insulating and protective char to form, which protects the underlying material.

For non-fire-protected water service pipe, the slow weepage of water through the pipe wall is an important factor that contributes to the fire performance of GRP piping since it reduces the surface temperature of the pipe. The designer shall be satisfied that the fluid loss by weepage will not adversely affect the function of the

© ISO 2002 — All rights reserved

system. The fire endurance properties of GRP piping may be different for pipes containing fluids other than water, for example produced water, glycol, diesel fuel lines and closed drains. The designer shall be satisfied that the GRP piping can provide the required fire resistance under these conditions. This may require a risk analysis and/or additional testing to be carried out.

9.3 Fire reaction

Fire reaction is concerned with the following properties:

a) ease of ignition;

b) surface spread of flame characteristics;

c) rate of heat release;

d) smoke emissions;

e) toxic gas emissions.

Guidance on the quantification of appropriate fire reaction properties is given in Annex F. The designer shall assign the required fire performance of the piping system according to the classification code given in Table 8 of ISO 14692-2:2002. The fire reaction classification code is designated by a two-field number, where spread of fire and heat release D, and smoke and toxicity E are assigned prescribed levels in decreasing order of severity. It is not necessary for the entire piping system to have the same fire classification. The designer may assign more than one fire classification code requirement according to location etc.

9.4 Fire-protective coatings

The designer shall consider the following when determining the performance of the fire-protective coating.

a) Fire risk (fire zone) and fire type for the area in which the piping is installed;

b) type, grade and diameter(s) of pipe;

c) jointing system(s) used;

d) whether the piping is "dry" or contains stagnant or flowing water;

e) type and thickness of passive fire-protective coating;

f) effect of long-term weathering, exposure to salt water, temperature and exposure to UV radiation;

g) effect of flexing, vibration, mechanical abuse, impact and thermal expansion;

h) liquid-absorption properties of the coating and piping. The fire-protective properties of the coating should not be diminished when exposed to salt water, oil or bilge slops;

i) ease of attachment of the coating under site conditions and the effect of interfacial liquid entrapment. The adhesion qualities of the coating should be such that the coating does not flake, chip, or powder when subjected to an adhesion test;

j) ease of repair.

The fire-protective coating should preferably be applied by the manufacturer in the factory. The application of fire-protective materials to achieve the flame spread, smoke or toxicity requirements shall be permanent to the pipe construction. On-site application of such material shall be limited to that required for installation purposes, e.g. field joints. If a fire-protective coating is used for the sole purpose of meeting the fire endurance requirements, the pipes may be coated on-site in accordance with the approved procedure for each combination, using the approved materials of both pipes and insulation, subject to on-site inspection and verification.

© ISO 2002 — All rights reserved

10 Static electricity

10.1 General

The presence of GRP, in common with all other insulating and non-earthed conducting materials, provides an enhanced risk for the generation and accumulation of electrostatic charge. However the risks from an insulating surface depend on its geometry, and the risk from a narrow cylinder is much less than that from a flat sheet of the same area. Cables, GRP handrails, etc. are of small diameter, whereas GRP pipes can be large and more sheet-like. Unlike structures, pipes made from GRP and other insulating materials are also capable of generating electrostatic charge on the inside of the pipe. Consequently electrostatic charges can be generated both on the inside and outside of GRP pipes and give rise to external discharges that could ignite a flammable atmosphere in the region surrounding the pipe. This is more likely if there are non-earthed conducting objects such as couplings present on the pipe. Energetic discharges can also occur inside insulating pipes, and care should be taken when operating a pipe that is only partially filled and may contain a flammable vapour. Sparks from subsequent discharging can also puncture pipe walls, produce shocks and affect the performance of personnel. Personnel coming into contact with highly charged GRP pipe can convey electrostatic charge into a hazardous area.

Consideration during design should therefore be given to these hazards, if GRP piping systems

a) are used to carry fluids capable of generating electrostatic charges;

b) come into rubbing contact with insulating materials;

c) are used in hazardous areas.

10.2 Classification code for control of electrostatic charge accumulation

Table 5 summarizes the electrical conductivity, electrostatic dissipative and resistance to earth performance requirements defined in 10.4. The X component of the X/Y classification code for the electrical properties of GRP piping components is given in Table 9 of ISO 14692-2:2002. The Y parameter has a value of either 1 or 0, depending on whether the requirements of continuity across the joint are satisfied, see 10.9.

GRP pipe system components that are designed to be electrically conductive should meet the classification code requirements of C1a, C2a, C3 or C4. Codes C5 and C6 provide performance parameters that could be used as input to a risk assessment and are intended for use with GRP pipe system components that were not designed to be electrically conductive. The classification codes C7 and C8 allow the use of pipe components that do not meet the requirements of C1 to C6 on a case-specific basis if agreed with the principal and authority having jurisdiction.

10.3 Mitigation options

If no significant electrostatic hazard is identified and the GRP piping does not pass through a hazardous area, there shall be no requirement for the GRP piping to be made electrically conductive, have electrostatic dissipative properties or to be earthed. There shall be no requirement to carry out 10.5 to 10.9.

If the piping passes through a hazardous area, the designer shall either

— require all GRP piping to be electrically conductive, codes C2a and C1a, regardless of the fluid being conveyed. The resistance to earth from any point in the piping system shall not exceed $1 \times 10^6\ \Omega$. There shall be no need to carry out the requirements in 10.5 to 10.9.

NOTE 1 The above reproduces the requirements of IMO Resolution A.753(18) [11], see G.1.

or

© ISO 2002 — All rights reserved

— apply the risk-based approach given in 10.5 to 10.9. This may result in more than one performance standard, depending on whether the source of electrostatic accumulation is due to charge-generation mechanisms inside or external to the pipe component. *Where this occurs, the more severe performance requirement shall apply.* Further guidance about the factors that determine the requirements for electrical conductivity and resistance to earth of GRP piping components is given in Annex G.

NOTE 2 The predominant source of electrostatic incendive discharge from GRP piping is likely to arise from electrically isolated unearthed metal objects attached to the GRP piping, rather than the GRP material itself.

NOTE 3 Where external electrostatic-generation mechanisms are of concern, the risk approach taken is no different to that which ought to be applied to all electrically isolated non-GRP piping components and structures located within the same vicinity.

NOTE 4 The risk of electrostatic discharge due to external charge-generation mechanisms is in many cases theoretical and may require a set of circumstances to coincide for an event to occur. Therefore the presence of GRP piping may not necessarily result in any significant enhanced risk of an incendive discharge beyond that which might normally be expected for the facility.

10.4 Design and documentation requirements

The designer shall identify and document the electrical conductivity, electrostatic dissipative and earth linkage requirements for the piping system located in hazardous areas as required in accordance with 10.3 and 10.10. The requirements shall apply to GRP pipes and GRP pipes that have a permanent outer coating. Other considerations may apply to GRP pipe that is clad with a removable covering material, e.g. insulation, see G.7.

This information shall be made available to the installer and operator. If pipe has been qualified according to its surface resistivity C5, charge shielding C3, or charge decay C6 properties, the designer shall identify whether these properties need to be verified during installation or operation.

© ISO 2002 — All rights reserved

Table 5 — Electrical conductivity, electrostatic dissipative and earthing requirements as a function of service conditions in hazardous areas

Service conditions	*X* parameter of *X/Y* conductivity code	Resistance to earth
Internal charge-generating mechanisms		
Pipe components that may contain a fluid with an electrical conductivity more than 10 000 pS/m and in which highly charged droplets are unlikely to form (see 10.5.3 and 10.5.4).	No conductivity requirement.	Fluid contents earthed to 10^6 Ω at a minimum of one point in the line.
Pipe components that may contain highly charged droplets of a fluid with an electrical conductivity more than 10 000 pS/m (see 10.5.2, 10.6.4 and 10.6.9).	C1a, C2a, or C3. See Note.	Fluid contents earthed to 10^6 Ω at a minimum of one point in the line. All isolated metal objects of significant size earthed to 10^6 Ω.
Pipe components that may contain a flammable environment, i.e. only partially full, where the fluid has an electrical conductivity less than 10 000 pS/m (see 10.6.5 and 10.6.9).	C1a preferred but C2a and C3 acceptable. See Note.	Fluid contents earthed to 10^6 Ω at a minimum of one point in the line. All isolated metal objects of significant size earthed to 10^6 Ω.
Pipe components that contain a flowing fluid with a velocity of more than 1 m/s and an electrical conductivity less than 10 000 pS/m (see 10.6.4 and 10.6.9).	C1a, C2a or C3. See Note.	Fluid contents earthed to 10^6 Ω at a minimum of one point in the line. All isolated metal objects of significant size earthed to 10^6 Ω.
Pipe systems of less than 10 m length that contain a flowing fluid with a maximum flow velocity of less than or equal 1 m/s and an electrical conductivity less than 10 000 pS/m (see 10.6.7 and 10.6.8). Pipe systems more than 10 m long, particularly those that contain microfilters at the upstream end of the line, may be required to meet the requirements of 10.5.4, depending on the outcome of a risk analysis.	No conductivity requirement.	Fluid contents earthed to 10^6 Ω at a minimum of one point in the line. All isolated metal objects of significant size earthed to 10^8 Ω.
External charge-generating mechanisms		
Pipe components that are at risk from weak external charging mechanisms but unlikely to have a covering of a conductive layer of significant size or to experience strong external charge generation during normal operations (see 10.7.3).	No conductivity requirement.	All isolated metal objects of significant size earthed to 10^8 Ω.
Pipe components that are at risk of exposure to moderate charge-generation mechanisms and which could have a covering of a conductive layer of significant size (see 10.7.4).	C2a See Note.	All isolated metal objects of significant size earthed to 10^8 Ω.
Pipe components that have an identified significant risk from strong external electrostatic charge generation mechanisms during normal operations (see 10.8.4 and 10.8.5).	C2a See Note.	All isolated metal objects of significant size earthed to 10^6 Ω.
NOTE Alternative performance standards acceptable if agreed with the principal and authority having jurisdiction.		

© ISO 2002 — All rights reserved

10.5 Pipes that contain a fluid with an electrical conductivity more than 10 000 pS/m

10.5.1 Seawater and crude oil typically comply with these conditions.

10.5.2 If a charged mist can form inside the pipe, the requirements of 10.6 shall apply.

NOTE Conductive liquids cannot accumulate charge inside the pipe unless they are in the form of fine droplets like those a charged mist could form. This is considered extremely unlikely for the situations covered by this part of ISO 14692 and would require the velocity to be very high and/or the diameter of the pipe to be very large.

10.5.3 The inside of the pipe shall be connected to earth at a minimum of one exposed earthing point in the system. If the pipe may not always be completely filled with liquid, the inside of the pipe shall be earthed at the lowest point of the system and at locations where liquid may become trapped.

10.5.4 All isolated metal objects of significant size (see G.4) located on or attached to pipes should preferably have a maximum resistance to earth at any point of 10^6 Ω. Priority should be given to objects that may be in close proximity to both fixed and mobile earthed objects, including personnel, during normal operations.

NOTE This requirement is a precaution to address situations where external charge-generation mechanisms are believed unlikely to occur, and have not been considered in the risk analysis.

10.6 Pipes that contain a fluid with an electrical conductivity less than 10 000 pS/m

10.6.1 Typical examples of such fluids include refined products such as diesel and kerosene.

NOTE See also Note in G.3.1.

10.6.2 The requirements of 10.6.3 to 10.6.6 should also be applied in non-hazardous areas if there is a risk of electric shock to personnel and the possibility of charge being accidentally transferred by personnel into a hazardous area.

10.6.3 The inside of the pipe shall be connected to earth at a minimum of one exposed earthing point in the system. If the pipe may not always be completely filled with liquid, the inside of the pipe shall be earthed at the lowest point of the system and at locations where liquid may become trapped.

10.6.4 GRP piping systems with a linear flow velocity exceeding 1 m/s shall be required to have C1a, C2a or C3 electrical conductivity properties. The use of components with C4 in conjunction with C5, C6 or C7 electrostatic dissipative properties shall be in agreement with the principal and authority having jurisdiction.

NOTE The C3 classification assumes that the maximum voltage generated inside the pipe is less than 50 kV. The designer shall give consideration to modifying the acceptance criterion if information is available to indicate that voltages greater than 50 kV are likely to be generated inside the pipe during service. Conversely it may be acceptable to relax the performance standard if information is available to indicate that voltages much lower than 50 kV are likely to be generated.

10.6.5 Pipes that may contain a flammable environment, i.e. only partially full, should preferably have a maximum value of resistance to earth at any point on the inside of the pipe of 10^6 Ω (C1a).

10.6.6 If the integrity of the inner layer is important for reasons other than safety, e.g. product quality, and the inner layers of the wall might be vulnerable to puncturing, then the maximum value of resistance to earth at any point on the inside of the pipe should be 10^6 Ω (C1a).

10.6.7 Pipe systems of less than 10 m length that contain a flowing fluid with a maximum linear velocity of less than or equal to 1 m/s and an electrical conductivity less than 10 000 pS/m shall not be required to be conductive, provided isolated metal components of significant size (see Annex G) have a maximum resistance to earth of less than 10^8 Ω. Pipe systems more than 10 m long, particularly those that contain microfilters at the upstream end of the line, may have to meet the requirements of 10.6.4 depending on the outcome of a risk analysis.

© ISO 2002 — All rights reserved

10.6.8 Metal components in the pipeline that provide a direct electrical path between the inside and outside of the pipe shall have a maximum resistance to earth at any point of 10^6 Ω. This resistance may be increased to 10^8 Ω for pipes satisfying the requirements of 10.6.7.

10.6.9 All isolated metal objects of significant size (see G.4) located on or attached to pipes should preferably have a maximum resistance to earth at any point of 10^6 Ω. Priority should be given to objects that may be in close proximity to both fixed and mobile earthed objects, including personnel, during normal operations. See Note in 10.5.4.

10.7 Pipes exposed to weak/moderate external electrostatic-generation mechanisms

10.7.1 The requirements given in 10.7.3 and 10.7.4 should also apply in non-hazardous areas if there is a significant risk that charge accumulation could be transferred by personnel into a hazardous area.

10.7.2 GRP piping systems with removable cladding material that have exposed or covered isolated metal objects of significant size under the cladding shall also be subject to the requirements of this subclause, see G.7.

10.7.3 Pipe components that are unlikely to have a covering of a conductive layer of significant dimensions or unlikely to experience strong external charge generation during normal operations shall not be required to be conductive, provided they are exposed to only weak external charge-generation mechanisms, e.g. occasional tribocharging and proximity to small tank water wash. All isolated metal objects of significant size (see G.4) should have a maximum resistance to earth of less than 10^8 Ω. Priority should be given to objects that may be in close proximity to both fixed and mobile earthed objects, including personnel, during normal operations.

NOTE Large pipes are more likely to have a sizeable covering of possible conductive material than small pipes.

10.7.4 Pipe components that may be covered with a conductive layer of significant dimensions during service but are unlikely to experience strong external charge generation during normal operations should be required to have electrostatic dissipative properties, classification C2a, provided they are exposed to only weak or moderate external charge-generation mechanisms, e.g. proximity to large tank washing, changing atmospheric fields, frequent tribocharging. If a pipe cannot achieve C2a, a classification of C5 or C6 may be acceptable where agreed with the principal and authority having jurisdiction. All isolated metal objects of significant dimensions (see G.4) located on or attached to pipes should have a maximum resistance to earth of less than 10^8 Ω. Priority should be given to objects that may be in close proximity to both fixed and mobile earthed objects, including personnel, during normal operations.

10.8 Pipes exposed to strong external electrostatic generation mechanisms

10.8.1 GRP piping systems with removable cladding material that have exposed or covered isolated metal objects of significant size under the cladding shall also be subject to the requirements of this subclause, see G.7.

10.8.2 The principal mechanism of concern is the efflux past the pipe of a two-phase fluid, e.g. a gas with condensed droplets, for example from a nearby pipe leaking steam or hydrocarbon. The latter presents a potentially dangerous situation, since a hazardous atmosphere is always present.

10.8.3 As part of the risk assessment, the designer shall take into account the properties of the efflux fluid and its ability to enable charge separation, the pressure driving the efflux, the reliability of fittings and fixtures that could provide a source of leak, frequency of maintenance, the orientation and distance of the source of leak from the GRP pipe, the ventilation available, the distance to the nearest suitable earthed object for a potential incendive discharge and the proportion of time the facility is manned.

10.8.4 All isolated metal components of significant size (see G.4) located on or attached to the pipe at all locations likely to be affected should have a maximum resistance to earth of 10^6 Ω. Priority should be given to objects that may be in close proximity to both fixed and mobile earthed objects, including personnel, during normal operations.

© ISO 2002 — All rights reserved

10.8.5 Pipe components that have an identified significant enhanced risk from strong external electrostatic generation mechanisms during normal operations should be electrically conducting classification C2a. If a pipe cannot achieve C2a, a classification of C5 or C6 may be acceptable where agreed with the principal and authority having jurisdiction.

NOTE There is an enhanced possibility of a propagating brush discharge from the GRP surface itself if the GRP pipe contains a conducting fluid and has a wall thickness less than 8 mm. Larger pipes are more likely to provide the capacitance for an incendive discharge than small pipes.

10.9 Continuity of electrical path within piping system

10.9.1 If piping is specified to be conductive, the designer shall consider the nature of the continuity path across the joint and determine the spacing of earth grounding straps accordingly. All components that cannot satisfy the continuity classification $Y = 1$ shall be independently earthed according to the manufacturer's recommendations.

10.9.2 If application of an external conductive paint is required, it is recommended that the coating be applied under factory conditions before the pipe is installed. It is recommended that conductive paint not be applied in the field in regions not readily accessible during service for inspection.

10.9.3 If an external conductive paint is applied, the operator shall be required to monitor the integrity of the coating during service life to ensure that regions of coating do not become isolated from earth.

10.9.4 The operator shall be required to monitor the performance of all earth bonding points during service.

10.9.5 The frequency and method used to assess the integrity of the coating, if applicable, and earth bonding points shall be commensurate with the results of the risk analysis.

10.10 Lightning strike

The use of GRP pipe to convey flammable or dangerous fluids in situations where it could be exposed to lightning strike shall be subject to the outcome of a risk analysis.

11 Installer and operator documentation

The system designer shall provide the following information for use by the installation and operation personnel. The information shall include, but not be limited to

a) operating and design parameters;

   1) design pressure;

   2) design temperature;

   3) T_g of the resin;

   4) qualified pressure of each component;

   5) minimum qualified pressure in each piping system;

   6) mean and maximum velocity conditions in each piping system;

   7) chemical resistance limitations, if applicable;

   8) procedures to eliminate or control water hammer and cavitation, if applicable;

   9) fire classification and location of fire-rated pipe, if applicable;

© ISO 2002 — All rights reserved

10) conductivity classification, location of conductive pipe, earth linkage/grounding requirements and location of earthing points;

11) criticality.

b) system drawings and support requirements for heavy equipment;

c) preferred locations for connection of final joint in pipe loops, where appropriate;

d) guidance to enable early pressure-testing of piping sections, if appropriate;

e) inspection strategy.

The inspection strategy for installation and operations shall consider system criticality and accessibility for inspection. Guidance on the factors that need to be considered in the preparation of the inspection strategy is given in Annex H. Guidance on the choice of inspection methods is given in annex E of ISO 14692-4:2002. If acoustic emission testing is required, it shall be carried out in accordance with ASTM E1118. The assessment of the condition of the resin or adhesive should be carried out in accordance with 6.8.2 of ISO 14692-2:2002.

© ISO 2002 — All rights reserved

Annex A
(informative)

Guidance for design of GRP piping system layout

A.1 Support types

Supports allowing pipe to move with relative freedom include

a) hangers, which are free to move laterally or longitudinally with the pipe,

b) fixed supports over which the pipe may slide, allowing longitudinal movement and often lateral movement,

c) guides that permit longitudinal and rotational movement of the pipe but restrain lateral movement,

d) anchors, which restrict movements in all directions and divide the pipe system into individually expanding sections.

Hangers are free to move on their hanger rods and include band, ring, clevis or roller types. An orthodox pipe rack made of steel angle is a typical fixed support permitting both longitudinal and lateral movement.

A.2 Support spacing

Supports are designed into a piping system to prevent excessive deflection due to the pipe and fluid mass. When the mid-span deflection is limited to 12,5 mm or 0,5 % of span, the bending stress on the pipeline is normally below the allowable levels of the pipe and fittings. However, in more stringent designs, it may be necessary to use shorter spacing. This can be true if there are a number of heavy in-line components, such as valves, in the system, or if the design pressure or temperature is near the product limit. Once support spacing is calculated, the maximum stress levels should be determined.

A.3 Thermal expansion

The change in length due to thermal expansion for any above-ground piping system should be calculated. The thermal expansion of contact-moulded and filament-wound GRP pipe in the axial direction can vary greatly. The thermal expansion of GRP pipe is a function of the expansion coefficient and temperature change, as well as the total length of the piping system. Thermal expansion coefficients of GRP are approximately constant over their designed temperature use, thus making thermal expansion linear with temperature.

A.4 Pressure expansion

Although generally neglected, axial expansion due to internal pressure can sometimes be equal in magnitude to thermal expansion, due to the low modulus values of GRP pipe. The result is a significant pressure expansion which should be taken into account to achieve accurate results. The magnitude of pressure expansion depends upon the design pressure, the pipe size, wall thickness, and mechanical properties of the product. It is recommended to check the magnitude of pressure expansion and determine if it needs to be included as a factor in the design.

© ISO 2002 — All rights reserved

A.5 Controlling expansion with anchors

In the design of GRP piping systems, use should be made of their low axial modulus. One benefit of this mechanical property is the small end loads created from temperature and pressure effects, allowing lighter anchors to be used. For anchor-to-anchor conditions, it is normally not necessary to include pressure expansion in the design, as pressure effects only occur at direction changes. The pressure effects, however, should be evaluated for each design case.

A.6 Controlling expansion with guides

In the pipe wall, compressive forces from expansion may result in buckling, and in general, instability, unless the piping system is properly restrained with guides. Guides are rigidly fixed to the supporting structure to provide pipe support and prevent buckling due to expansion while still allowing the pipe to move in the axial direction. Under normal conditions, the linear expansion of the piping system between anchor points can be controlled without exceeding the allowable axial stress levels of the pipe and fittings.

Guides are recommended for lines that are subject to sideloads or uplift. Examples include lines subjected to pressure surges, lines emptied and filled during operation, and lines which can be lifted or moved (especially when empty) by wind or other external loads.

A.7 Controlling expansion with directional changes

Directional changes, as part of the geometry of the piping system, can alleviate the stresses created due to thermal and pressure expansion. However, the stress levels created in the GRP fittings, specifically elbows, at directional changes should be kept below the allowable bending stress level of the pipe and fittings. The stress level in the pipe and fittings depends on the total change in length and the distance to the first guide or hanger.

A.8 Controlling expansion with expansion loops

An expansion loop (loop of pipe usually C-shaped) is another method used to alleviate stresses due to length changes in the piping system. Expansion loops are generally employed between extremely long straight runs of pipe to alleviate the end loads and buckling between anchors. As with guide spacing for directional changes, the design is usually a simplified approach. Again, the design parameters include thermal and pressure expansions, not just temperature change. Decreasing the moduli to account for the effects of temperature leads to more conservative results, and should be considered in any detailed design.

A.9 Controlling expansion using bellows units

As far as possible, the use of bellows units (flexible pipe connectors) should be limited to applications in which the bellows accommodate expansion axially, i.e. in which they are only compressed/extended. Other methods, e.g. transverse displacement of a single bellows or an articulated bellows system, require special consideration.

© ISO 2002 — All rights reserved

Annex B
(informative)

Description and guidance on selection of jointing designs

B.1 General

Various types of bonded and mechanical joints are available for GRP piping. These tend to be proprietary in nature but can generally be categorized into the following types:

a) concentric adhesive-bonded joints;

b) laminated joints;

c) mechanical O-ring bell-and-spigot elastomeric seal joints (with/without locks);

d) flanged joints;

e) other mechanical joints;

f) metallic/GRP interfaces.

For most offshore applications, thrust-resistant types of joints are required, e.g. adhesive-bonded joint, elastomeric bell-and-spigot sealed joints (with locks), laminated joint or flanged joint.

However, for well-supported and anchored piping, non-thrust-resistant systems can be used, e.g. elastomeric bell-and-spigot sealed joints (without locks) or mechanically joined systems.

The designer should take into account the following factors when selecting the jointing method:

— criticality (reliability);

— performance under bending loads;

— installation environment (ease of inspection);

— ease of fabrication.

B.2 Adhesive-bonded joints

The adhesive-bonded joint is a rigid type of joint, which consists of a slightly conical (tapered) bell end and a machined (cylindrical or tapered) spigot end. Alternatively, the bell-and-spigot tapers may be threaded. A typical adhesive-bonded joint is shown in Figure B.1.

Adhesive joints have the lowest material cost of all joints, and are structurally efficient when made up correctly. If a cylindrical spigot is used, the joint is made up to a shoulder. The tapered bell and tapered spigot joint has two matching tapered surfaces and does not make up to a shoulder. The former has the advantage of enabling the position of final make-up to be readily determined. The latter (taper/taper joint) is a stronger joint but is more prone to positional errors if incorrectly assembled, which can weaken the joint.

Make-up of the adhesive joint tends to become more difficult for larger sizes, particularly for pipe above 450 mm diameter. A concern is the size of the adhesive bead that is created when the joint is made up and which could protrude into the bore of the pipe. This could create a substantial blockage factor as well as provide a source for erosion and cavitation damage.

© ISO 2002 — All rights reserved

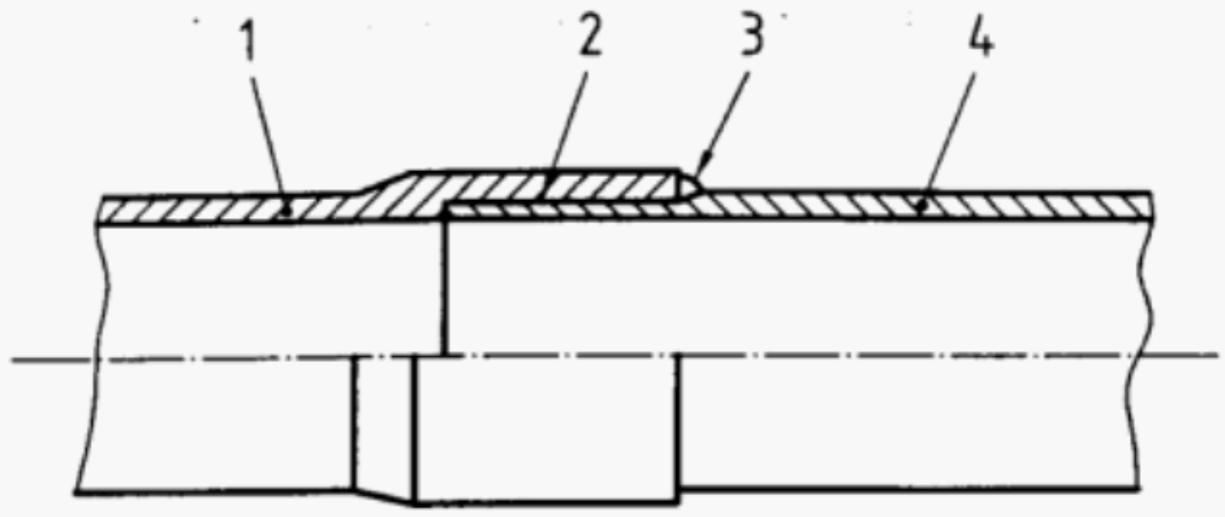

Key

1 pipe with integral socket end
2 adhesive
3 finishing fillet
4 pipe with spigot end

Figure B.1 — Typical adhesive-bonded joint

B.3 Laminated joints

The laminated joint consists of plain-ended pipe and fittings, prepared, aligned and laminated with reinforcing fibres and resin/hardener mixture as shown in Figure B.2. There are two types of laminated joint: the outer surface of the pipe can be either lightly abraded leaving a cylindrical surface, or else abraded to provide a taper. Laminated joints require a high degree of craftsmanship and their use on-site should be minimized. Lamination of pipes for a pipe spool assembly at a prefabrication shop or at a manufacturer's facility is recommended.

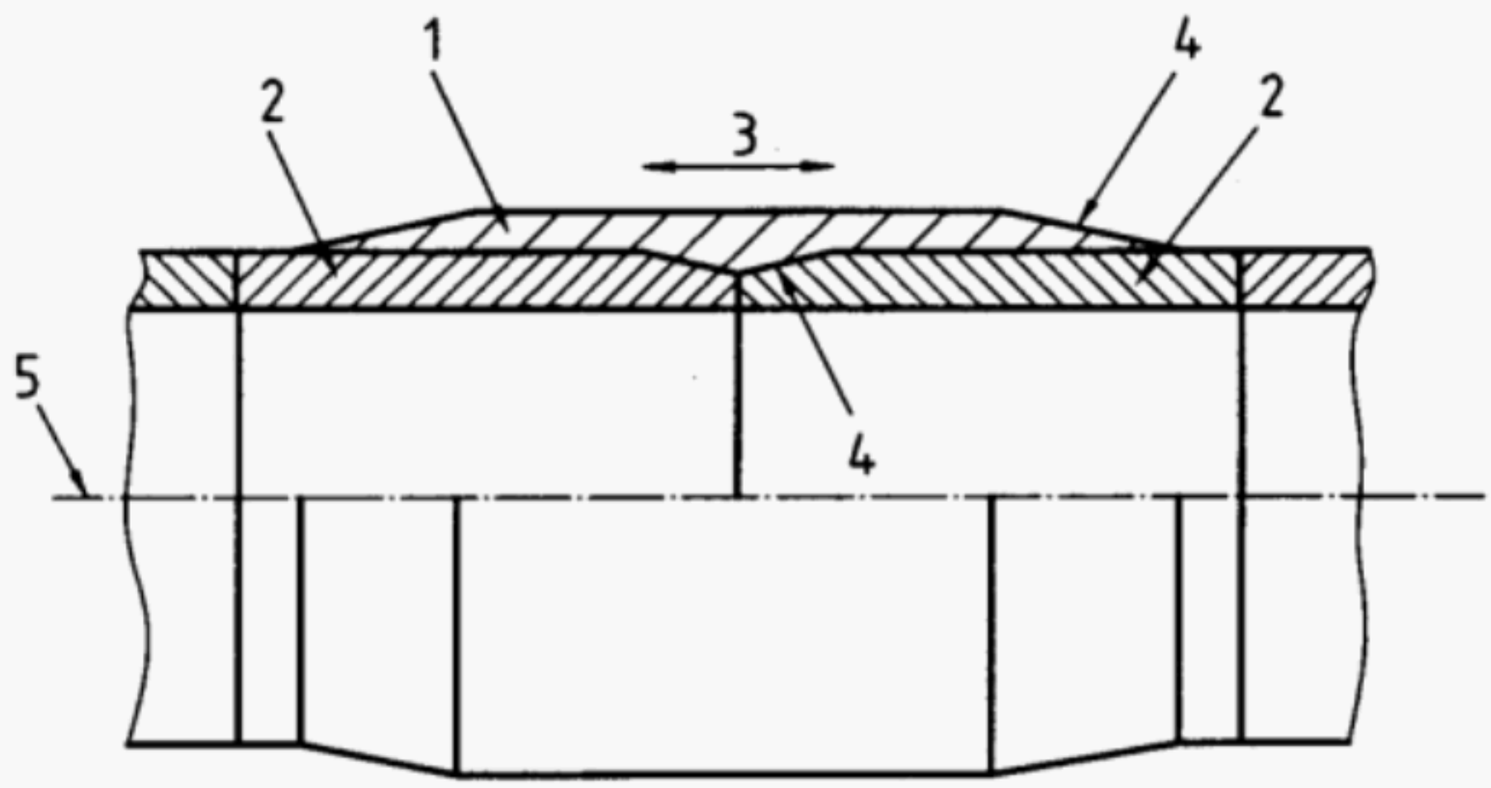

Key

1 laminate overlay
2 pipe laminate
3 laminate length
4 tapers not steeper than 1 in 6
5 pipe centreline

Figure B.2 — Typical laminated joint

© ISO 2002 — All rights reserved

The joint has the advantage over adhesive joints that preparation of the joint is from the outside only and the relative positioning of the two butt ends is less critical. For field joints (hook-up joints), laminated joints should be considered due to their flexibility to accommodate minor misalignments.

B.4 Mechanical O-ring elastomeric bell-and-spigot seal lock joints

Elastomeric bell-and-spigot seal lock joints are made up of a spigot end and a socket end with O or lip sealing rings. The socket may either be an integrated part of the pipe (single socket), or a separate item (double socket). A double socket is used for joining two pipes both with spigot ends. Joints with two or more O-rings may be used. Elastomeric seal joints allow for some axial movement as well as a certain amount of angular deflection. If a tensile-resistant joint is required, a locking strip can be incorporated as shown in Figure B.3.

These are the simplest joints to assemble and they can be designed to enable a small amount of axial and angular movement within the joint. They are cheaper and generally structurally more efficient than flanged joints, but more expensive than adhesive joints. They are more bulky than adhesive joints, but have the advantage that they can be quickly assembled in poor working conditions and are the preferred joint for concrete gravity-base system piping and ballast transfer piping in ships.

The joint is also used for pump riser columns, where a keyway is added in the axial direction of the joint to enable the transfer of torque.

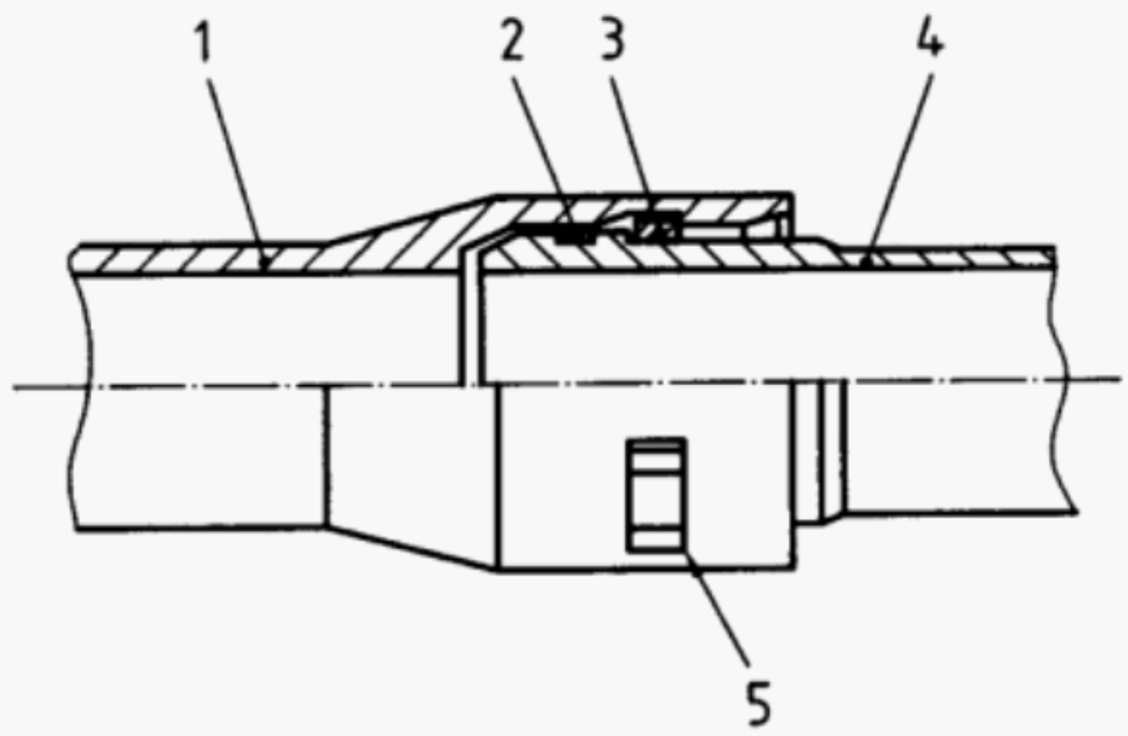

Key

1 pipe with integral socket end
2 elastomeric ring
3 locking strip
4 pipe with spigot end
5 insert hole for locking strip

Figure B.3 — Typical elastomeric bell-and-spigot sealed joints (locking type)

B.5 Flanged joints

Flanged joints facilitate connections with steel piping and allow easy assembly and disassembly of piping systems. The outside diameter and hole spacing of flanges should meet the requirements of either ISO 7005-3 [4] or, via ISO 15649 [5], of ASME B16.5 [6]. GRP flanges are always flat-faced and, accordingly, matching flanges should also be flat-faced.

© ISO 2002 — All rights reserved

Two types of flanges are commonly used:

— fixed-type flanges, adhesive-bonded or laminated to the pipe ends;

— loose ring-type flanges, with GRP collars adhesive-bonded or laminated to the pipe ends with loose backing flanges in GRP or steel.

Connecting bolts should always be used with washers on both flange faces, and consideration should also be given to the use of backing plates to avoid damage to the GRP on torquing the bolts.

Generally the use of flanged joints should be avoided if possible, since composite flanges are very sensitive to bad alignment and overtorquing of bolts. If possible, the use of heavy-duty flanges should also be avoided and should not be specified to compensate for the possibility of inadequate quality control during installation, since they significantly add to cost, mass and fitting length.

B.6 Threaded connections

Three types of threaded connection are available for both high- and medium-pressure GRP pipe systems:

a) male/male joint, using a coupler with standard API threads (e.g. EUE 10RD, EUE 8RD, so-called round threads), see Figure B.4;

b) female/male threaded "integral" joint with standard API threads and sealing via the threads using PTFE tape and/or special compounds, as recommended by the manufacturer, see Figure B.5;

c) female/male coarse threaded "integral" joint, including O-ring for sealing, see Figure B.6.

To reduce friction and enhance sealing performance, thread fillers may be used, e.g. graphite and/or ceramic particles. PTFE-based lubricants may also be used to reduce friction, i.e. to facilitate low make-and-break torque.

Threaded end connections which conform to API standards should meet the requirements of API Spec 15HR [18]. Threaded end connections which are the design of the manufacturer should meet the specification, e.g. manufacturing quality, surface finish, etc., of the manufacturer.

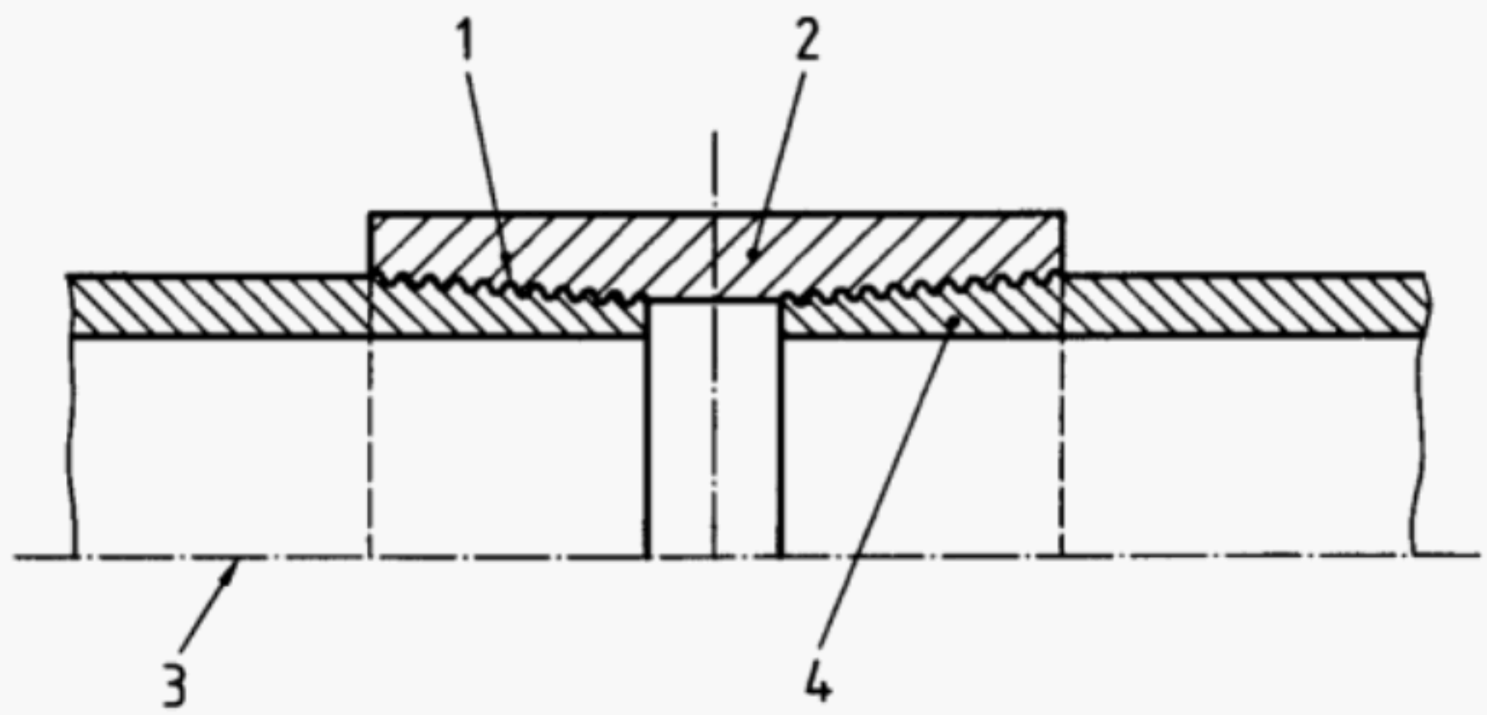

Key

1 standard API threads
2 female thread connector
3 pipe centreline
4 pipe laminate

Figure B.4 — Standard API joint

© ISO 2002 — All rights reserved

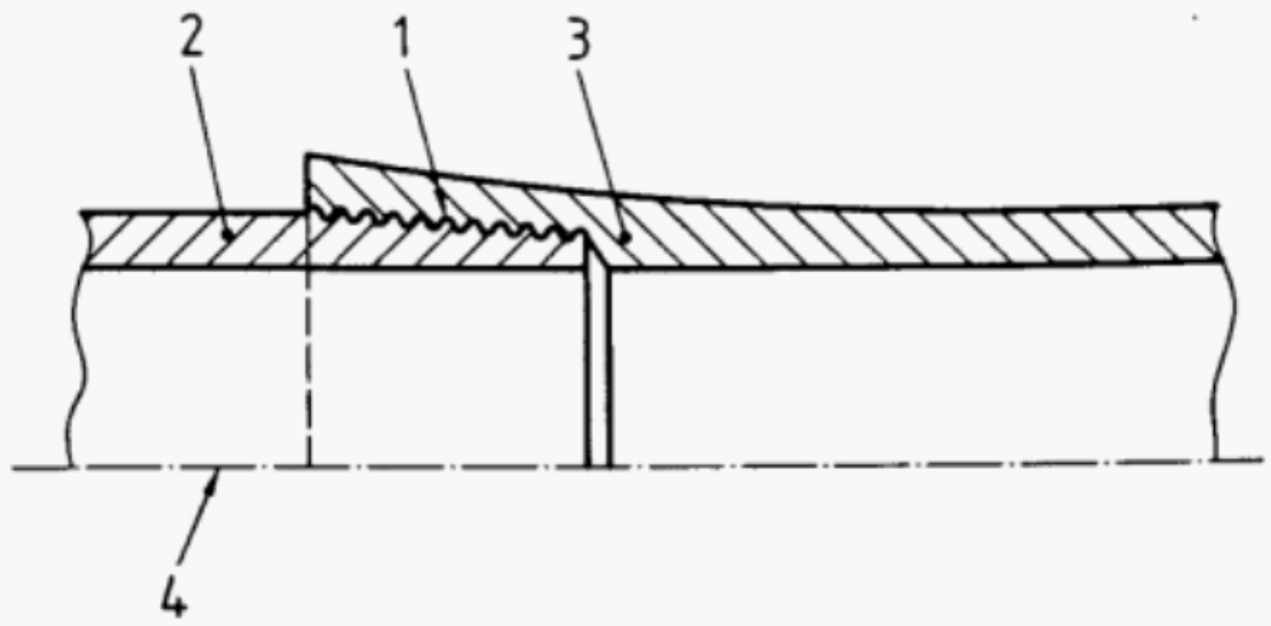

Key

1 standard API threads
2 pipe body – male end
3 pipe body – female end
4 pipe centreline

Figure B.5 — Integral joint (API thread)

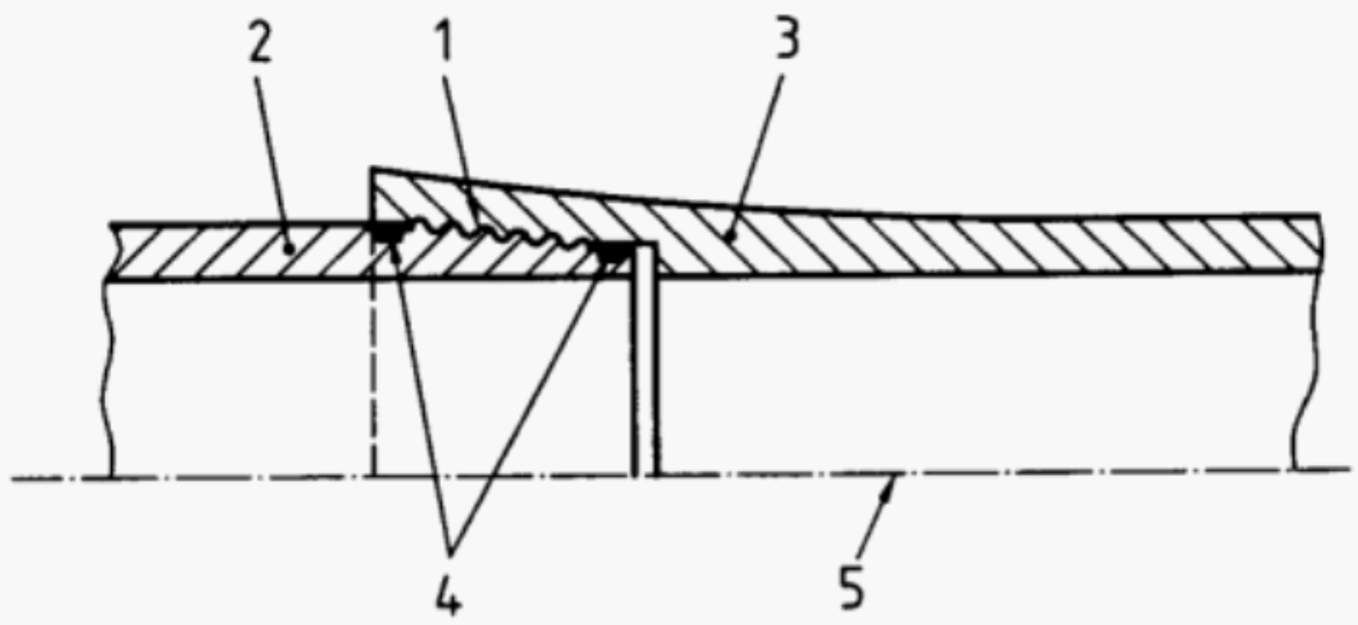

Key

1 coarse thread
2 pipe body – male end
3 pipe body – female end
4 O-ring seals
5 pipe centreline

Figure B.6 — Integral thread (coarse thread + O-ring seals)

B.7 Other mechanical joints

Various proprietary mechanical joints or couplers are available for GRP piping. Reference should be made to the manufacturer's data for guidance on use.

© ISO 2002 — All rights reserved

Annex C
(informative)

Guidance on material properties and stress/strain analysis

Manufacturers generally optimize the performance of GRP pipes for the internal pressure 2:1 hoop:axial stress ratio condition. This implies that the material behaviour is anisotropic and therefore the hoop modulus is greater than axial modulus.

The material properties, and their symbols, for GRP pipes/piping systems relevant for system design are:

Symbol	Material property
E_a	Young's modulus in the axial direction
E_h	Young's modulus in the hoop direction
ν_{ha}	Poisson's ratio, axial to hoop strain resulting from a stress in the hoop direction
ν_{ah}	Poisson's ratio, hoop to axial strain resulting from a stress in the axial direction
G_{shear}	Shear modulus
α_a	Coefficient of thermal expansion in the axial direction
α_h	Coefficient of thermal expansion in the hoop direction

where $\frac{\nu_{ha}}{E_h} = \frac{\nu_{ah}}{E_a}$

Typical values for the above-mentioned properties for 55° filament-wound glass-fibre-reinforced matrix pipe with a glass volume fraction of 55 % for epoxy, vinyl ester and polyester resins are given in Table C.1:

Table C.1 — Typical material properties

Material property	Value
E_a	12 000 MPa
E_h	22 000 MPa
ν_{ha}	0,55
ν_{ah}	0,30
G_{shear}	11 000 MPa
α_a	18 µm/m·°C
α_h	13 µm/m·°C

© ISO 2002 — All rights reserved

The relevant strains and stresses, and their symbols, for system design of GRP pipes/piping systems are:

Symbol	Stress/strain
ε_a	Strain in axial direction
ε_h	Strain in hoop direction
γ	Shear strain (in-plane)
σ_a	Stress in the axial direction
σ_h	Stress in the hoop direction
τ	Shear stress (in-plane)

The strains for a given applied stress are given by:

$$\varepsilon_a = \frac{\sigma_a}{E_a} - \nu_{ha}\frac{\sigma_h}{E_h}$$

$$\varepsilon_h = -\nu_{ah}\frac{\sigma_a}{E_a} + \frac{\sigma_h}{E_h}$$

$$\gamma = \frac{\tau}{G_{shear}}$$

Conversely, the stresses for a given applied strain are given by:

$$\sigma_a = \frac{E_a}{(1-\nu_{ha}\nu_{ah})}(\varepsilon_a + \nu_{ha}\varepsilon_h)$$

$$\sigma_h = \frac{E_h}{(1-\nu_{ha}\nu_{ah})}(\varepsilon_h + \nu_{ah}\varepsilon_a)$$

$$\tau = G_{shear} \cdot \gamma$$

© ISO 2002 — All rights reserved

Annex D
(normative)

Guidance on flexibility analysis

D.1 Overview and definitions

The following system design guidance provides an explicit means of deriving the imput parameters for the design allowances for filament-wound pipe and associated fittings. It is based on the use of the test data obtained by the vendor as part of the product qualification process and experience of how filament-wound laminates behave under combined loadings. The procedure involves the evaluation of allowed design envelopes for different load cases. A principle adopted during the development of the procedure was that it should not impose an additional test burden onto the component suppliers.

In the context of other codes, ISO 14692 should be regarded as a development of the UKOOA document[19]. The treatment and definition of system load cases, sustained, occasional, follows that used by ASME B31.3[20]. For system design parameters, flexibility factors, stress intensity factors and pressure stress multipliers, BS 7159 has been an important source of information. The fundamental difference between ISO 14692 and other documentation is that it specifies that products be offered and qualified on a performance basis.

This poses certain technical challenges when developing a method to establish parameters for design calculations, as the integrity of the components themselves has not been demonstrated by design but through testing.

For straight pipe, the procedure is conceptually straightforward, as there is normally sufficient data to construct a baseline short-term envelope for system stresses. Allowed design envelopes can then be developed by scaling from this baseline (it is the validity of this scaling which is the key technical assumption).

For fittings, however, the situation is less straightforward as explained by the following.

— The stress distribution for parts under pressure is complex and not limited to a simple membrane. For many components local bending will be the dominant component of stress. This issue is, for certain components, catered for in design by the use of a pressure stress multiplier (m_{psb}).

— The material of construction and manufacture method are different in fittings compared to straight pipe. The constraints of geometry mean that lay-ups will be different and, although the resin and glass reinforcement will be the same, the details of construction, winding angle, fibre fraction, etc. will vary. This means that mechanical properties such as strength and the degree of anisotropy will be different.

— The thickness of the laminate will vary markedly with position due to the application of material over $2D$ curvatures. For example, bends will be considerably thicker in the intrados compared to the extrados. This effect adds markedly to the complexity of the stress system.

The guidance adopted is to use the concept of "equivalent stress". This is a means of equating fitting performance to that of straight pipe so that an allowed "equivalent" design stress may be developed. It is not a means of calculating the *actual* stress in the part, which in itself will be highly variable and not simple to compute. The "equivalent stress" is derived on the basis that qualification testing will have demonstrated that the fittings have a pressure rating at least as high as the associated straight pipe.

This guidance represents the state of the art at the time of publication and is based on empirical data obtained[7] on pipes up to 0,3 m diameter. However, the accuracy of the stress calculations obtained using the methods described in this annex cannot be guaranteed, and alternative calculation procedures shall be acceptable if agreed with the principal. These include for example the use of finite element analysis techniques and procedures based on experience.

© ISO 2002 — All rights reserved

For the purposes of this annex, the following terms and definitions apply.

D.1.1
stress intensification factor
S_f
ratio of the actual/effective stress in a component/fitting under external load to the nominal stress in that fitting as determined based on a straight pipe run with the same section modulus and Young's modulus

D.1.2
flexibility factor
κ
ratio of the flexibility in bending of a component/fitting to the flexibility of a straight pipe of the same lamination, Young's modulus and thickness with a length corresponding to the developed length of the fitting

D.1.3
pressure stress multiplier
m_{psb}
fractional increase in hoop stress loading due to applied internal pressure acting on the fitting

NOTE The above definitions relate the flexibility stress intensification factors of a bend or tee to the flexibility of a pipe made of the same material and with the same diameter and wall thickness. In a conventional steel pipe system, the pipe bend and the pipe are usually of the same material and dimension. In GRP systems, the pipe and bend are usually separate parts that are adhesively bonded or laminated together. Material, layup and dimensions can differ between the bend and the pipe; in particular, the bend walls are thicker. The factor of increase in thickness is typically in the range of two to five, depending on diameter and pressure rating.

For GRP, little experimental evidence is available to substantiate the definition of S_f values. Recent studies made by SINTEF [7] indicate that S_f values and flexibility values as indicated in BS 7159 do not comply with their experimental results for recent designs of filament-wound GRP piping.

Given the debate related to the S_f values as included in BS 7159 and the lack of other well-established data, the following information shall be used for the definition of the S_f and flexibility factors. These are based on figures that have been used in a large number of analyses and have proven to be satisfactory.

For piping systems made with non-filament-wound fittings and/or pipe, it is acceptable for the user of this part of ISO 14692 to refer directly to BS 7159 in preference to this annex.

Reference shall be made to BS 7159 for the specific factors of the flexibility analysis for diameters larger than 0,5 m.

D.2 Flexibility analysis

D.2.1 General

There are two areas of flexibility analysis that specifically require judgement by the design engineer. First, the model of the piping system should be conceived in such a way as to reflect the actual behaviour of the piping system. Many good modelling techniques are common to both isotropic and anisotropic piping systems, although some are unique to anisotropic systems.

The second area that requires judgement is the interpretation of the results obtained from a flexibility analysis. When steel pipe is used, there are well-defined allowable stress levels for the various grades of steel available. However, for GRP piping there is a wide range of laminates available and definition of the allowable stress is far more complex.

© ISO 2002 — All rights reserved

D.2.2 Bends

D.2.2.1 General

The response of bends to pressure and thermally induced axial and bending loads is more complex than the equivalent loads on a straight pipe. Application of a bending moment causes ovalization, resulting in both induced axial and hoop stresses. The ratio of the induced hoop to axial stresses resulting from bending can for example range between 2,1 and 2,8, depending on whether the direction of loading is in-plane or out-of-plane. Therefore, stresses within bends and their direction become complex and cannot easily be related to applied pressure and tensile loads.

The potential of applied pressure and bending loads to induce axial as well as hoop stresses results in a conservative approach to defining the long-term strength of a GRP bend. The long-term axial strength is taken as one-half the long-term strength at the 2:1 condition (axial stress). This is the same conservative approach to system design of straight pipes.

The following empirical relationships for flexibility factor, stress intensification factors and pressure stress multipliers are based on BS 7159. The assumptions and restrictions of the empirical formulae shall be considered when using these relationships in a piping system design. In particular, attention shall be paid to the wall thickness of the adjoining pipe. In the derivation of empirical correlations for flexibility factor, pressure stress multipliers and stress intensification factors, it is assumed that the maximum wall thickness of the bend is 1,75 times the wall thickness of the pipe.

NOTE In terms of laminate types as described in BS 7159, only type 3 filament-wound laminates are considered.

D.2.2.2 Flexibility factor (κ_b)

The calculations given below determine the flexibility factor for bends, first in terms of the component itself and then translated to a global flexibility factor that can be used in pipe analysis computer programs. This is achieved by multiplying the local flexibility factor by the ratio of $(E_a I_b)_{pipe}/(E_a I_b)_{bend}$.

The flexibility factor, κ_b, for GRP bends is based on the pipe factor, λ_b, and the axial pressure correction factor, δ_a, due to the effect of internal pressure.

λ_b is given by:

$$\lambda_b = \frac{4 t_b R_b}{D_i^2} \tag{D.1}$$

where

t_b is the average wall thickness of the reference laminate of the bend, in millimetres;

D_i is the internal diameter of the reinforced body of the bend, in millimetres;

R_b is the mean pipe bend radius, in millimetres.

See Table D.1 for details.

NOTE 1 The wall thickness, t_b, of the reference laminate is defined as the wall thickness of the equivalent pipe section used for modelling purposes in the piping system design calculations.

© ISO 2002 — All rights reserved

δ_a is given by:

$$\delta_a = \frac{1}{\left[1+\left(2{,}53\,p/(E_{h,bend})\cdot(R_b/t_b)^{1/3}\cdot(D_i/2t_b)^2\right)\right]} \tag{D.2}$$

where

p is the applied pressure, in megapascals;

$E_{h,bend}$ is the hoop modulus of the bend, in megapascals;

The flexibility factor for smooth bends is given as a function of λ_b, see Table D.1:

$$\kappa_b = \delta_a \cdot \frac{0{,}7}{\lambda_b} \cdot \frac{E_{a,pipe}\cdot t_{pipe}}{E_{a,bend}\cdot t_b} \tag{D.3}$$

For a hand-lay bend, the factor 0,7 would be replaced by 1,0.

The flexibility factor for mitred bends is given as a function of λ_b, see Table D.1:

$$\kappa_b = \delta_a \cdot \frac{0{,}64}{(\lambda_b)^{0{,}83}} \cdot \frac{E_{a,pipe}\cdot t_{pipe}}{E_{a,bend}\cdot t_b} \tag{D.4}$$

where

$E_{a,pipe}$ is the axial modulus of the attached pipe, in megapascals;

$E_{a,bend}$ is the axial modulus of the bend, in megapascals.

NOTE 2 Equations (D.3) and (D.4) are different to the corresponding equations in BS 7159. The SINTEF work [7] indicates that it is possible for the increased flexibility due to ovalization of the bend to be more than compensated for by a large increase in the wall thickness of the bend, with the result that the global flexibility factor could be less than 1, i.e. the bend is stiffer than the pipe.

NOTE 3 The ratio of the wall thicknesses is taken as an approximation of the ratio of the second moment of areas. The axial modulus of the pipe may be used in place of that for the bend if the modulus of the bend is not known.

An upper limit, based on experience, is placed on κ_b. For either smooth or mitred bends, it shall not be greater than 3.

D.2.2.3 Stress intensification factor (S_f)

For bends, smooth or mitred, four stress intensification factors are required to quantify the principal stresses. They are:

$S_{fa,ib}$ axial SIF under in-plane bending;

$S_{fa,ob}$ axial SIF under out-of-plane bending;

$S_{fh,ib}$ hoop SIF under in-plane bending;

$S_{fh,ob}$ hoop SIF under out-of-plane bending.

These S_f are functions of the pipe factor, λ_b, the axial pressure correction factor, δ_a, and the hoop pressure correction factor, δ_h where δ_h is given by:

© ISO 2002 — All rights reserved

$$\delta_h = \frac{1}{\left[1+\left(1{,}1p/(E_{h,bend})\cdot(R/t_b)^{2/3}\cdot(D_i/2t_b)^{11/6}\right)\right]} \tag{D.5}$$

The axial SIF under in-plane bending for a smooth bend, $S_{fa,ib}$, is given by (see Table D.1):

$$S_{fa,ib} = \delta_a \frac{0{,}76}{(\lambda_b)^{2/3}} \tag{D.6}$$

For a hand-lay smooth bend, the factor 0,76 is replaced by 0,96.

The axial SIF under in-plane bending for a mitred bend, $S_{fa,ib}$, is given by (see Table D.1):

$$S_{fa,ib} = \delta_a \frac{0{,}5}{(\lambda_b)^{2/3}} \tag{D.7}$$

The axial SIF under out-of-plane bending for a smooth bend, $S_{fa,ob}$, is given by (see Table D.1):

$$S_{fa,ob} = \delta_a \frac{0{,}56}{(\lambda_b)^{2/3}} \tag{D.8}$$

For a hand-lay smooth bend, the factor 0,56 is replaced by 1,03.

The axial SIF under out-of-plane bending for a mitred bend, $S_{fa,ob}$, is given by (see Table D.1):

$$S_{fa,ob} = \delta_a \frac{0{,}51}{(\lambda_b)^{2/3}} \tag{D.9}$$

The hoop SIF under in-plane bending for a smooth bend, $S_{fh,ib}$, is given by (see Table D.1):

$$S_{fh,ib} = \delta_h \frac{1{,}6}{(\lambda_b)^{2/3}} \tag{D.10}$$

For a hand-lay smooth bend, the factor 1,6 is unchanged.

The hoop SIF under in-plane bending for a mitred bend, $S_{fh,ib}$, is given by (see Table D.1):

$$S_{fh,ib} = \delta_h \frac{1{,}2}{(\lambda_b)^{2/3}} \tag{D.11}$$

The hoop SIF under out-of-plane bending for a smooth bend, $S_{fh,ob}$, is given by (see Table D.1):

$$S_{fh,ob} = \delta_h \frac{1{,}58}{(\lambda_b)^{2/3}} \tag{D.12}$$

For a hand-lay bend, the factor 1,58 is replaced by 1,42.

The hoop SIF under out-of-plane bending for a mitred bend, $S_{fh,ob}$, is given by (see Table D.1):

$$S_{fh,ob} = \delta_h \frac{1{,}53}{(\lambda_b)^{2/3}} \tag{D.13}$$

An upper limit, based on experience, is placed on all four S_f . No S_f shall be greater than 2.5.

© ISO 2002 — All rights reserved

D.2.2.4 Pressure stress multiplier (m_{psb})

The procedures given in ISO 14692-2 establish the qualified pressure for components within the pipe system. If Equation (7) is used to determine the qualified service stress for bends, then the stress concentrations within the component will already be taken into account. In these circumstances the pressure stress multiplier, m_{psb}, used in system design calculations shall be set to 1.

For bends that have not been qualified according to the procedures given in ISO 14692-2,the following values of pressure stress multiplier, m_{psb}, shall apply;

— for smooth bends, the pressure stress multiplier, m_{psb}, shall be 1;

— for mitred bends, the pressure stress multiplier, m_{psb} shall be 1,3.

D.2.2.5 Stress analysis

The purpose of the stress analysis is to calculate effective hoop and axial stresses which can then be used to assess whether the stress levels in the bend are within acceptable limits, i.e. within the factored long-term design envelope.

The effective hoop and axial stresses, $\sigma_{heff,b}$ and $\sigma_{aeff,b}$, in megapascals, are given by:

$$\sigma_{heff,b} = \sqrt{\left(\sigma_{hp} + \sigma_{hb}\right)^2 + 4\xi^2}$$
$$\sigma_{aeff,b} = \sqrt{\left(\sigma_{ap} + \sigma_{ab}\right)^2 + 4\xi^2} \qquad \text{(D.14)}$$

where

σ_{hp} is the hoop pressure stress, in megapascals $= \dfrac{m_{psb} \cdot p\left(D_i + t_b\right)}{2t_b}$

σ_{ap} is the axial pressure stress, in megapascals $= \dfrac{p\left(D_i + t_b\right)}{4t_b}$

σ_{hb} is the hoop bending stress, in megapascals $= \dfrac{\left(D_i + 2t_b\right)}{2I_b}\sqrt{\left(S_{fh,ib}M_i\right)^2 + \left(S_{fh,ob}M_o\right)^2}$

σ_{ab} is the axial bending stress, in megapascals $= \dfrac{\left(D_i + 2t_b\right)}{2I_b}\sqrt{\left(S_{fa,ib}M_i\right)^2 + \left(S_{fa,ob}M_o\right)^2}$

ξ is the torsional stress, in megapascals $= 1{,}5 \times \dfrac{M_T\left(D_i + 2t_b\right)}{4I_b}$

NOTE 1,5 is a stress intensification factor.

p is the applied pressure, in bar (MPa)

M_i is the applied in-plane bending moment, in newton millimetres

M_o is the applied out-of-plane bending moment, in newton millimetres

M_T is the applied torsional moment, in newton millimetres

I_b is the second moment of area, in millimetres^4 (mm^4) $= \dfrac{\pi}{64}\left(\left[D_i + 2t_b\right]^4 - D_i^4\right)$

© ISO 2002 — All rights reserved

If the stresses, $\sigma_{heff,b}$ and $\sigma_{aeff,b}$, lie inside the factored long-term design envelope, then the bend is designed within acceptable limits. If the stresses lie outside the this envelope, then a higher-rated bend, i.e. a thicker-walled bend, shall be chosen and the stress calculations repeated.

Table D.1 — Summary of piping design factors for bends

Bends	Smooth	Mitred
Diagram	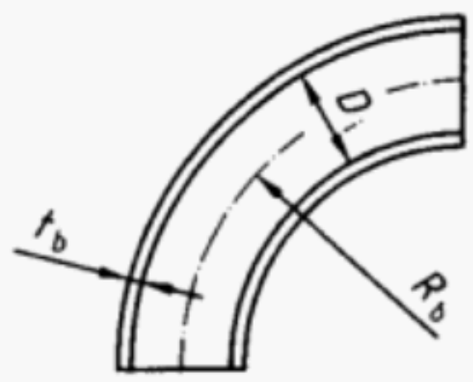	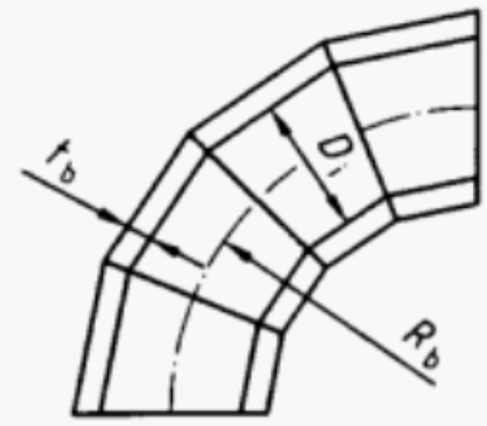
Pipe factor	$\lambda_b = \frac{4 t_b R_b}{D_i^2}$	
Axial pressure correction factor	$\delta_a = \frac{1}{\left(1+\left[2{,}53 p/(E_{h,bend})\cdot(R_b/t_b)^{1/3}\cdot(D_i/2t_b)^2\right]\right)}$	
Hoop pressure correction factor	$\delta_h = \frac{1}{\left(1+\left[1{,}1 p/(E_{h,bend})\cdot(R/t_b)^{2/3}\cdot(D_i/2t_b)^{11/6}\right]\right)}$	
Flexibility factor	$\kappa_b = \delta_a \cdot \frac{0{,}7}{\lambda_b} \cdot \frac{E_{a,pipe}\cdot t_{pipe}}{E_{a,bend}\cdot t_b}$	$\kappa_b = \delta_a \cdot \frac{0{,}64}{(\lambda_b)^{0{,}83}} \cdot \frac{E_{a,pipe}\cdot t_{pipe}}{E_{a,bend}\cdot t_b}$
SIF axial/in-plane	$S_{fa,ib} = \delta_a \frac{0{,}76}{(\lambda_b)^{2/3}}$ with $S_{fa,ib} \leqslant 2{,}5$	$S_{fa,ib} = \delta_a \frac{0{,}5}{(\lambda_b)^{2/3}}$ with $S_{fa,ib} \leqslant 2{,}5$
SIF axial/out-of-plane	$S_{fa,ob} = \delta_a \frac{0{,}56}{(\lambda_b)^{2/3}}$ with $S_{fa,ob} \leqslant 2{,}5$	$S_{fa,ob} = \delta_a \frac{0{,}51}{(\lambda_b)^{2/3}}$ with $S_{fa,ob} \leqslant 2{,}5$
SIF hoop/in-plane	$S_{fh,ib} = \delta_h \frac{1{,}6}{(\lambda_b)^{2/3}}$ with $S_{fh,ib} \leqslant 2{,}5$	$S_{fh,ib} = \delta_h \frac{1{,}2}{(\lambda_b)^{2/3}}$ with $S_{fh,ib} \leqslant 2{,}5$
SIF hoop/out-of-plane	$S_{fh,ob} = \delta_h \frac{1{,}58}{(\lambda_b)^{2/3}}$ with $S_{fh,ob} \leqslant 2{,}5$	$S_{fh,ob} = \delta_h \frac{1{,}53}{(\lambda_b)^{2/3}}$ with $S_{fh,ob} \leqslant 2{,}5$
Pressure stress multiplier	$m_{psb} = 1$	$m_{psb} = 1$ (see D.2.2.4 for conditions) or $m_{psb} = 1{,}3$
NOTE Modifications to these equations for smooth hand-lay components are given in the main text.		

D.2.3 Tees

D.2.3.1 General

At the intersection point of tee sections, stresses and their direction become complex and cannot easily be related to applied pressure and tensile loads. There are no analytical expressions that can be used to calculate stresses within tees and, as a consequence of this, relationships for pressure stress multipliers, stress intensification factors and flexibility factors available in piping codes are empirical.

© ISO 2002 — All rights reserved

From recent work within the Marinetech programme [8], where typical tee sections were loaded under combined bending and internal pressures, the following conclusions can be drawn.

a) Maximum stress intensification factors due to pressure are of the order of unity and are located in the intersection region.

b) Maximum stress intensification factors due to bending are also of the order of unity. Additional stresses due to bending can therefore be added to pressure stresses.

Therefore, it is the intersection region that governs component performance. Based on this conclusion, the design envelope for tees is therefore similar to that for joints. That is, failure under tensile load is dominated by axial "pull-out" at the intersection of the pipe and tee, and under pressure is dominated by weepage. This implies that the long-term failure envelope is rectangular.

The following empirical relationships for flexibility factor, stress intensification factors, and pressure stress multipliers are based on BS 7159. The assumptions and restrictions of the empirical formulae should be considered when using these relationships in a piping system design.

NOTE In terms of laminate types as described in BS 7159, only type 3 filament-wound laminates are considered.

D.2.3.2 Flexibility factor (κ_t)

The flexibility factor, κ_t, for GRP tees irrespective of whether the tee is equal or unequal, moulded or fabricated shall be 1, see Table D.2.

D.2.3.3 Stress intensification factor (S_{ft})

The stress intensification factor, S_{ft}, for tees is non-directional and is a function of the pipe factor, λ_t, where λ_t is given by:

$$\lambda_t = \frac{2t_t}{D_i} \text{ for equal tees}$$

$$\lambda_t = \frac{(2t_{br}/D_b)^2}{2t_t/D_i} \text{ for unequal tees} \qquad \text{(D.15)}$$

where

t_{br} is the average wall thickness of the branch laminate of the tee, in millimetres;

D_b is the internal diameter of the branch of the tee, in millimetres (see Table D.2 for details).

NOTE The wall thickness of the reference laminate is defined as the wall thickness of the equivalent pipe section used for modelling purposes in the piping system design calculations.

The stress intensification factor is given as a function of λ_t:

$$S_{ft} = \frac{0{,}66}{(\lambda_t)^{0{,}5}} \qquad \text{(D.16)}$$

An upper limit, based on experience, is placed on S_{ft}. It shall not be greater than 2,3.

© ISO 2002 — All rights reserved

D.2.3.4 Pressure stress multiplier (m_{pst})

The procedures given in ISO 14692-2 establish the qualified pressure for components within the pipe system. If Equation (7) is used to determine the qualified service stress for tees, then the stress concentrations within the component will already be taken into account. In these circumstances, the pressure stress multiplier, m_{pst}, used in system design calculations shall be set to 1.

For tees that have not been qualified according to the procedures given in ISO 14692-2, the value of the pressure stress multiplier, m_{pst}, shall be determined according to the following method.

The pressure stress multiplier, m_{pst}, for tees is non-directional and is a function of the pipe factor, λ_t, where λ_t is given by equation (D.15). The pressure stress multiplier, m_{pst}, is given as a function of λ_t:

$$m_{pst} = \frac{1{,}4}{(\lambda_t)^{0{,}25}} \tag{D.17}$$

An upper limit, based on experience, is placed on m_{pst} such that m_{pst} shall not be greater than 3.

D.2.3.5 Stress analysis

The effective hoop and axial stresses, $\sigma_{heff,t}$ and $\sigma_{aeff,t}$, in megapascals, are given by:

$$\begin{aligned} \sigma_{heff,t} &= \sqrt{(\sigma_{hp} + \sigma_{hb})^2 + 4\xi^2} \\ \sigma_{aeff,t} &= \sqrt{(\sigma_{ap} + \sigma_{ab})^2 + 4\xi^2} \end{aligned} \tag{D.18}$$

where

σ_{hp} is the hoop pressure stress, in megapascals $= \dfrac{m_{pst}\,p(D_i + t_t)}{2t_t}$

σ_{ap} is the axial pressure stress, in megapascals $= \dfrac{p(D_i + t_t)}{4t_t}$

σ_{hb} is the hoop bending stress, in megapascals $= 0$

σ_{ab} is the axial bending stress, in megapascals $= \dfrac{(D_i + 2t_t)}{2I_b} S_{ft} \sqrt{M_i^2 + M_o^2}$

ξ is the torsional stress, in megapascals $= \dfrac{1{,}5 \times M_T (D_i + 2t_t)}{4I_t}$

p is the applied pressure, in megapascals;

M_i is the applied in-plane bending moment, in newton millimetres;

M_o is the applied out-of-plane bending moment, in newton millimetres;

M_T is the applied torsional moment, in newton millimetres;

I_t is the second moment of area of tee, in millimetres^4 (mm^4) $= \dfrac{\pi}{64}\left(\left[D_i + 2t_t\right]^4 - D_i^4\right)$

© ISO 2002 — All rights reserved

If the stresses, $\sigma_{heff,t}$ and $\sigma_{aeff,t}$, lie inside the long-term factored design envelope, then the tee is designed within acceptable limits. If the stresses lie outside this envelope, then a higher-rated tee, i.e. a thicker-walled tee, shall be chosen and the stress calculations repeated.

Table D.2 — Summary of piping design factors for tees

Diagram	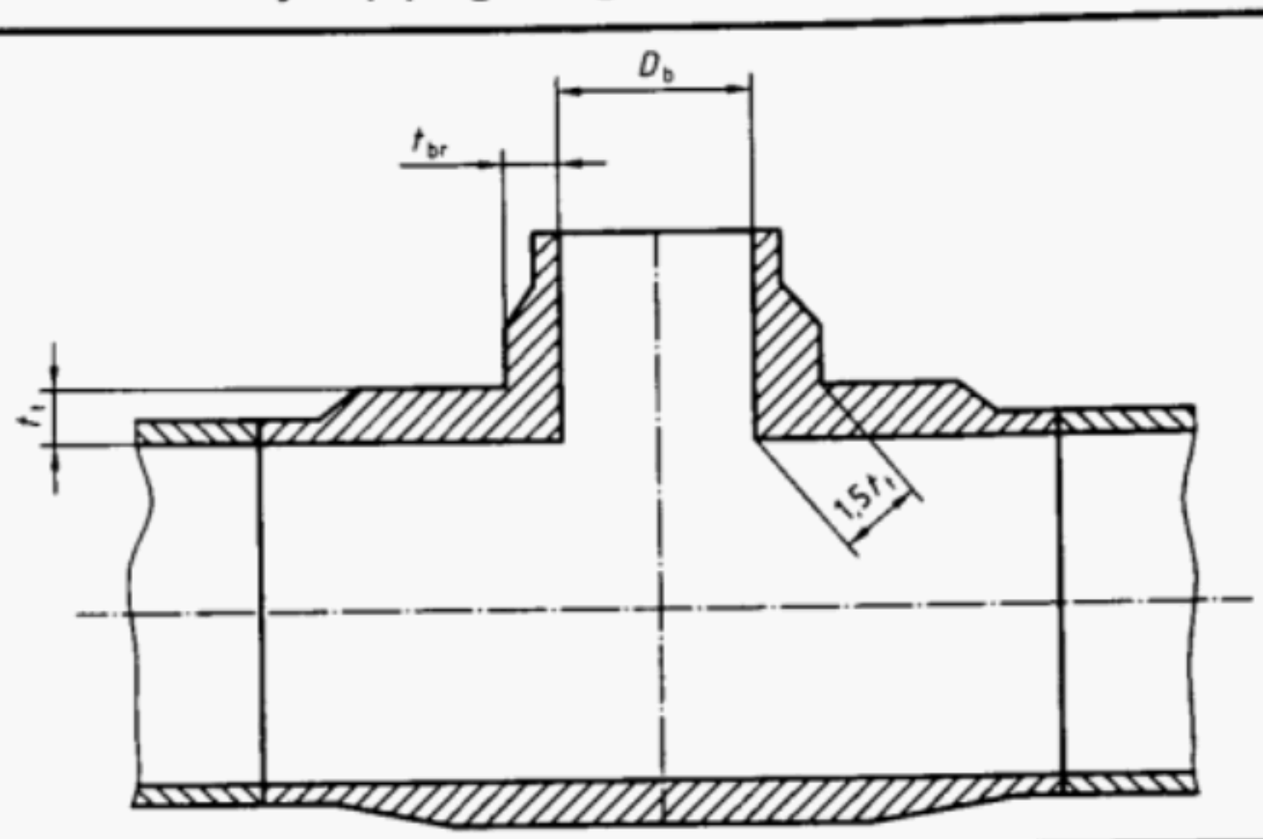	
Flexibility factor	$\kappa_t = 1$	
Stress intensification factor	$S_{ft} = \dfrac{0{,}66}{(\lambda_t)^{0{,}5}}$ with $S_{ft} \leqslant 2{,}3$	
Pipe factor	Equal tee	Unequal tee
	$\lambda_t = \dfrac{2t_t}{D_i}$	$\lambda_t = \dfrac{(2t_{br}/D_b)^2}{2t_t/D_i}$
Pressure stress multiplier	$m_{pst} = 1$ (see D.2.3.4 for conditions) or $m_{pst} = \dfrac{1{,}4}{(\lambda_t)^{0{,}25}}$ with $m_{pst} \leqslant 3{,}0$	

© ISO 2002 — All rights reserved

Annex E
(normative)

Calculation of support stresses for large-diameter liquid-filled pipe

E.1 General

The contact stresses at the support become significant for large-diameter liquid-filled pipes with large D/t ratio. This annex provides guidance on the calculation of the support stresses for large-diameter liquid-filled pipes using the following assumptions.

a) The mass of the GRP pipe is considered insignificant compared to the mass of the liquid contents.

b) The pipe material is considered isotropic, i.e. the hoop and axial modulus are the same.

NOTE 1 A conventional filament-wound GRP pipe has a hoop modulus about twice that in the axial direction.

c) The supports are flexible, for example they include an elastomeric pad.

d) The empirical coefficients are based on experimental data obtained on vessels of diameter 1 m and greater.

Alternative calculation procedures shall be acceptable if agreed with the principal. These include for example the use of finite element analysis techniques and procedures based on experience.

E.2 Axial stresses at mid-span

Consider a single span simply supported. The axial stresses at mid-span arise from the overall pressure, p , in megapascals, and the hydrostatic pressure head, together with the bending of the pipe between the span, L_s.

The axial stress, in megapascals; at the highest point of the cross-section is:

$$\sigma_{a,bp} = \frac{0,125}{t_r}\left[(2p \cdot D) + [\rho_L \times 9,81 \times (0,5D_i^{\,2} - L_s^2)] \times 10^{-6}\right] \qquad \text{(E.1)}$$

where

p is the pressure, in megapascals;

D is the mean pipe diameter of reinforced wall, in metres = $(D_i + 2t - t_r)$;

D_i is the pipe inner diameter, in metres;

t is the nominal wall thickness, in metres;

t_r is the average reinforced wall thickness, in metres;

L_s is the support span, in metres;

ρ_L is the density of fluid within the pipe, in kilograms per cubic metre.

NOTE The mass of the GRP pipe is insignificant compared to the mass of the liquid contents.

© ISO 2002 — All rights reserved

The axial stress, in megapascals, at the lowest point of the cross-section is:

$$\sigma_{a,bp} = \frac{0,125}{t_r}\left[(2p \cdot D) + [\rho_L \times 9,81 \times (1,5D_i^{\,2} + L_s^2)] \times 10^{-6}\right] \quad \text{(E.2)}$$

The mid-span vertical deflection, considering a single span simply supported, may be obtained from Equation (32).

E.3 Axial stresses at the pipe support

In this case, a section of the pipe is isolated on either side of the support (see Figure E.1).

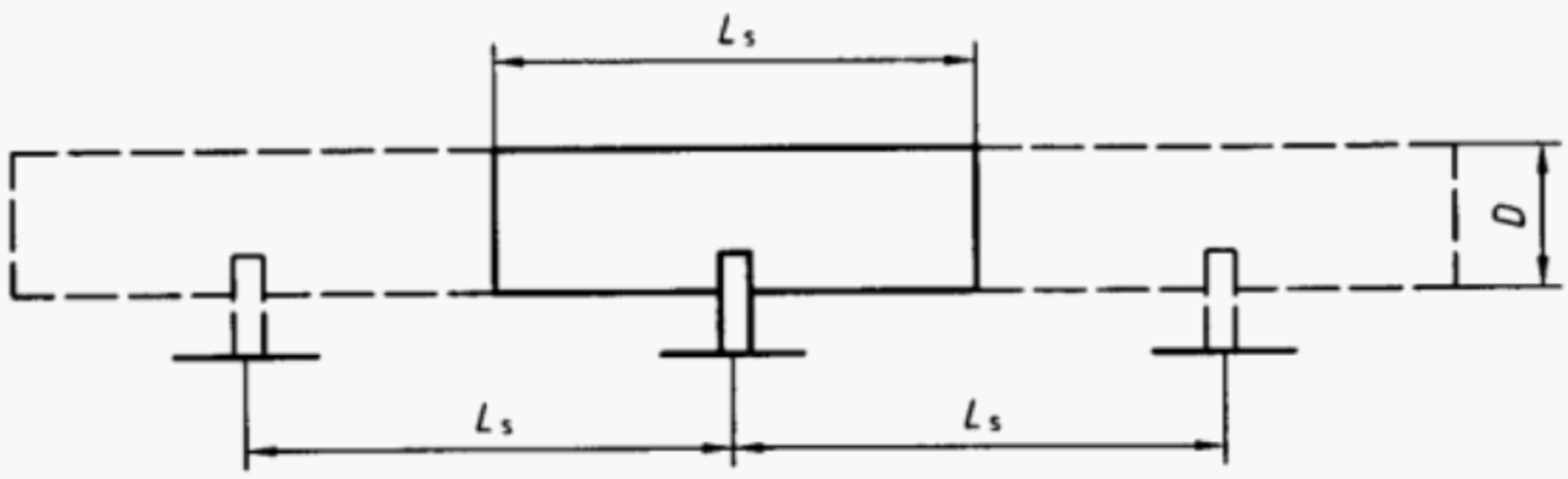

Figure E.1 — Section of the pipe isolated on either side of the support

The axial stress, in megapascals, at the point of greatest overall bending tensile stress is:

$$\sigma_{a,bp} = \frac{0,125}{t_r}\left[(2p \cdot D) + [\rho_L \times 9,81 \times D_i^{\,2} + \frac{\rho_L \times 9,81}{K_1}(L_s^2 - 0,5D_i^{\,2})] \times 10^{-6}\right] \quad \text{(E.3)}$$

where the dimensions and parameters are the same as in E.2.

The axial stress, in megapascals, at the lowest point of the cross-section is:

$$\sigma_{a,bp} = \frac{0,125}{t_r}\left[(2p \cdot D) + [\rho_L \times 9,81 \times D_i^{\,2} - \frac{\rho_L \times 9,81}{K_2}(L_s^2 - 0,5D_i^{\,2})] \times 10^{-6}\right] \quad \text{(E.4)}$$

The constants K_1 and K_2 for a range of total saddle angles, θ, are given in Table E.1.

Table E.1 — Values of constants K_1 and K_2

θ degrees	K_1	K_2
120	0,107	0,192
135	0,132	0,234
150	0,161	0,279
165	0,193	0,328
180	0,229	0,380

© ISO 2002 — All rights reserved

E.4 Shear stress in the pipe at the support

Using the isolated support concept employed above, the maximum shear stress, in megapascals, is given by:

$$\tau_{max} = K_3 \times \rho_{eff} \times 9{,}81 \times \left[\frac{\pi D}{4t_r}\right] \times L_s / 10^6 \qquad \text{(E.5)}$$

where the dimensions and parameters are the same as in 8.6.

NOTE This equation does not include the effect of internal pressure.

The constant K_3 for a range of total saddle angles, θ, is given in Table E.2:

Table E.2 — Values of constants K_3 for a range of total saddle angles, θ

θ degrees	120	135	150	165	180
K_3	1,171	0,958	0,799	0,675	0,577

The allowable shear stress, $\tau_{allowable}$, in megapascals, shall not be greater than $50/K$, where $K = 5$ for filament-wound pipes

Alternatively the value of K may be determined by experiment.

In all cases, $\tau_{allowable} > \tau_{max}$.

E.5 Hoop stresses at the pipe support

E.5.1 General

Hoop stresses, in megapascals, shall be determined at the lowest point of the support cross-section (the nadir) and at the uppermost point of the support (the saddle horn). Using again the isolated support concept, the following stress equations are obtained.

E.5.2 Hoop stress at the nadir

$$\sigma_h = -K_4 \times \frac{9{,}81 \times L_s \times \rho_0}{t_r(b_1 + 10 \cdot t_r) \times 10^6} \qquad \text{(E.6)}$$

where

the dimensions and parameters are the same as in 8.6;

b_1 is the width of the saddle support, in metres.

NOTE This equation does not include the effect of internal pressure.

The constant K_4 for a range of total saddle angles, θ, is given in Table E.3:

Table E.3 — Values of constants K_4 for a range of total saddle angles, θ

θ degrees	120	135	150	165	180
K_4	0,750	0,711	0,673	0,645	0,624

© ISO 2002 — All rights reserved

If the pipe and support are fixed together, K_4 is 1/10th the value given in Table E.3.

If the pipe is not fixed to the support, the full value of K_4 shall be used.

E.5.3 Hoop stress at the saddle horn

$$\sigma_h = \left[\frac{9{,}81 \times L_s \times \rho_0}{4t_r(b_1 + 10t_r)} + \frac{3}{2} K_5 \left(\frac{9{,}81 \times L_s \times \rho_0}{t_r^{\,2}} \right) \right] / 10^6 \qquad \text{(E.7)}$$

where

the dimensions and parameters are the same as in 8.6;

b_1 is the width of the saddle support, in metres.

NOTE This equation does not include the effect of internal pressure.

The constant K_5, for a range of total saddle angles, θ, is given in Table E.4:

Table E.4 —Values of constants K_5 for a range of total saddle angles, θ

θ degrees	120	135	150	165	180
K_5	0,0528	0,0413	0,0316	0,0238	0,0174

The hoop stresses given by Equations (E.6) and (E.7) shall be checked with the appropriate allowable values.

© ISO 2002 — All rights reserved

Annex F
(informative)

Guidance on quantifying fire performance properties

F.1 General

This guidance is intended primarily for GRP piping systems for seawater. The test procedures described can also be applied in some cases to GRP piping containing hydrocarbon and/or flammable liquids, for example produced water, diesel fuel lines and drains. However, high-pressure hydrocarbon applications such as process pipe requires more rigorous consideration of fire engineering and fire performance requirements. If the failure of a piping system has no significant consequence, fire testing may not be required.

The methodology for selection of the fire performance requirements can be summarized as follows.

a) Each application has a location and criticality of service associated with it.

b) The criticality of service enables a consequence of failure to be identified.

c) The location identifies

   1) the nature of the threat to which the application may be subject;

   2) the consequences of fire spread and smoke/toxic emissions.

d) The performance parameters to withstand the threat can then be identified.

e) The performance standards are quantified. The performance standards should match or surpass the functional requirements.

f) A fire classification code is selected which matches the required performance standards.

g) Supporting engineering data are reviewed to confirm that performance standards can be met. If there is a shortfall of information, further testing should be carried out or an alternative design selected.

Fire performance is defined in ISO 14692-1 as the combination of fire endurance plus fire reaction properties, i.e. smoke and toxic emissions, heat release and spread of flame properties. The fire test parameters and the performance standards which can be derived from the specified functional requirements can then be matched to piping systems which have been tested according to the requirements given in Annexes E and F of ISO 14692-2:2002 and found to have acceptable fire endurance and reaction properties under clearly defined fire conditions.

F.2 System definition

F.2.1 Application

The first stage in the selection of fire performance requirements for a GRP piping system is to identify the application and extent of the system in service. The function of the system in a fire, and if required by the design thereafter, should be clearly defined.

© ISO 2002 — All rights reserved

F.2.2 Criticality

Once the system application has been defined, a risk assessment shall be made to evaluate the criticality of the system. A critical system can be defined as any system which should perform a function either during or after a fire, the loss of which results in personnel hazard or unacceptable facilities damage, either directly or indirectly. The criticality for a given application depends on the precise function of that application on a given installation. For example, the continuing operation of a cooling-water system that may service an item of equipment is either essential or non-essential to the survival of the facilities and/or personnel, in the event of a fire.

F.2.3 Location

The location or locations of a system on an installation shall be defined, as these affect the probability of piping being exposed to a potential fire and/or blast and other hazards.

Location is a major factor on the type of fire to which a system could be exposed (see F.6). For example, firewater piping could be exposed to either jet fire or hydrocarbon pool fire depending on the design of a facility, but piping within safe areas is likely to be subject to only a cellulosic type fire.

Location will also determine the "consequence" of non-functional "fire reaction" performance elements, including

a) spread of fire;

b) escalation of fire;

c) personnel safety (smoke and toxicity emissions from the GRP pipe material).

These consequences primarily depend on the proximity of personnel and escape routes, and the amount of ventilation available. The spread and escalation of fire could also contribute to failure of essential instrument lines and other equipment.

F.3 Consequence of system failure and/or spread of flame and emissions

There are two separate "consequence" considerations for GRP piping exposed to a fire. These are the consequence of system failure, i.e. loss of service, and the consequence of fire reaction.

An assessment of the consequence of failure of any system is essential prior to the identification of appropriate fire performance requirements. For example, in a piping system, it is clear that the consequence of failure of a potable water system and a fire-water main are very different. The potable-water pipework, being non-essential, is unlikely to require fire endurance properties, whereas the fire-water main in most cases will. The direct and indirect consequences should be evaluated, and if the consequence of failure is unacceptable in terms of personnel safety and asset integrity, other engineering solutions should be evaluated (i.e. redesign, relocation of equipment, or reduction of inventory, etc.).

There may be a fire-reaction consequence within confined areas or for transits through fire-rated walls. Concerns as to the heat release, the surface spread of flame to adjacent areas and the release of smoke and toxic emissions should be addressed.

To summarize, the consequence of the failure of a system to maintain its function following exposure to fire is determined by the criticality of the service. The consequence of fire reaction depends upon the location(s), and also on the nature and extent of the system.

© ISO 2002 — All rights reserved

F.4 Performance parameters

F.4.1 General

Having established the consequence of failure for a piping system, and/or having identified that there is a consequence of system loss and/or of fire reaction, the relevant performance parameters during and after the fire should now be identified.

F.4.2 Functional performance parameters

The following parameters may be required:

a) maximum blast overpressure to which a system can be exposed;

b) minimum rate of fluid flow through a piping system for the system to function as needed;

c) retention of a minimum fluid pressure in a piping system which is required for the system to function correctly;

d) system endurance, i.e. the minimum time the system is required to perform at the required level. For example, the dry endurance time for deluge piping may be defined as an input to a quantitative risk assessment, whilst the endurance time under conditions of flowing water may be defined by other considerations, e.g. survival time for safe refuge, personnel evacuation, asset protection, etc.

F.4.3 Parameters for reaction to fire performance

The following parameters are recommended.

a) The requirement for smoke visibility and toxicity performance should be identified, particularly for piping in enclosed areas.

b) The requirements for spread of flame should be identified. Consideration should be given to

   1) orientation of the pipe and proximity of reflective surfaces,

   2) spread of fire through chimney effect of clustered pipes and entrapped heat,

   3) spalling and wicking of the GRP and potential to absorb hydrocarbon as fuel.

c) The potential for addition to the fuel inventory from the GRP pipework should be identified. This should be quantified in terms of the heat-release characteristics of the GRP.

d) Consideration should also be given to the possible effects of

   1) post-fire-exposure flaming (i.e. time required for the material to self-extinguish),

   2) smouldering (i.e. production of carbon monoxide and smoke),

   3) potential for re-ignition.

Suitable methods for quantifying spread of flame, heat release and emissions of smoke and toxicity are given in Table 8 of ISO 14692-2:2002. Heat release may also be measured using the cone calorimeter [9]. This test can be used to determine the ease by which the material is likely to self-extinguish on removal of the heat source, and whether a thermal feedback can be set up which is likely to cause an increase in burning rate. The wall thickness has a major effect on the magnitude of heat release. Heat release is often an indicator of the magnitude of smoke emission, since high heat-release rates are usually associated with heavy smoke generation.

© ISO 2002 — All rights reserved

The testing of small samples under laboratory conditions provides some guidance to the ranking of smoke performance of different materials. However, the smoke testing of any system is difficult to simulate realistically, as the performance of a material in an actual fire is directly influenced by the flow of surrounding air which can dilute the smoke produced and can also affect the degree of combustion of the smoke particles to CO and CO_2. In addition, the rate of smoke development is related to the rate of heat release and fire growth. Therefore care is needed when applying these parameters to a real fire situation that may arise offshore.

For open or well-ventilated areas, the relevance of toxicity testing becomes questionable, as significant dilution with fresh air will reduce the harmful effects of smoke produced from burning GRP and such testing may then not be required. If an enclosed area contains GRP piping, the toxicity of the fumes should be below the maximum permissible levels given in IMO MSC.61(67) [10].

Typical glass-reinforced thermosetting composites, i.e. without intumescent coatings and fire-retardant additives, do not produce irritant gases, and harmful gas emissions are limited to primarily carbon monoxide and carbon dioxide. The potential toxicity for base resins is therefore usually restricted to the production of carbon dioxide, which is determined more by external oxygen availability rather than by the oxygen intrinsic in the material. If the pipe is made from no matrix material apart from the base resin, the only location where emissions could build up to a toxic level is likely to be within confined areas.

F.5 Performance standards

Once the performance parameters have been identified for the critical properties of any system (see F.4), the performance standards can be quantified. As a minimum, the performance standards should match the functional requirements. Consideration should be given to possible degradation of the fire and mechanical performance properties due to ageing, weathering, etc. If a safety factor is considered necessary, it is included within the performance standard and documented. This provides an auditable trail, and avoids the possibility for compounding safety factors beyond reasonable levels. The performance standards and all included safety factors should be agreed between the principal and the authority having jurisdiction.

F.6 Evaluation of fire threat

There are three clear steps in the evaluation of a fire threat.

e) The location in which any system is used should be clearly defined, as this may affect not only the consequence of failure but also the type, extent and duration of a fire event, as well as the proximity of active and passive fire control equipment.

f) Having defined the location of the system, the fire threat can be qualitatively determined. This will largely be concerned with the pre-fire blast, fuel inventories, the ventilation available and the potential for jet fires that may exist.

g) The qualitative threat evaluation leads directly to the quantitative evaluation of the threat, to produce estimates of duration and values of blast over-pressure, temperature and/or heat flux and flame erosion/inertia effects that would be experienced during a fire. The quantification of the fire threat should be consistent with that derived in the safety case.

The designer should be aware of possible deficiencies/inaccuracies in the modelling software and their influence on the above evaluation.

F.7 Classification code (type test envelopes) for pipe system fires

The classification codes given in Table 7 and Table 8 of ISO 14692-2:2002 provide a means of identifying the fire performance of pipe in terms of service conditions and severity of fire threat. Whilst the number of test scenarios and the different performance requirements may appear daunting to a supplier trying to standardize

© ISO 2002 — All rights reserved

systems, it is anticipated that 95 % of all offshore applications will be covered by a limited number of classification codes. These in time would come to represent typical "type test" envelopes. The fire classification codes listed below illustrate potential uses of GRP.

A.B.C/xxx-(D.E) where:

a) **EF.JF.EC/030-(3.4)** represents a firewater dry deluge system in an open ventilated area which may be exposed to a hydrocarbon jet fire and which may be empty initially but become water-filled very soon after a fire is detected. The system is required to function for 30 min, and spread of fire along the pipes to adjacent areas should be limited.

b) **ST.HF.EB/030-(3.4)** represents a water-filled firewater piping system feeding hose reels and monitors inside the hazardous area in an open ventilated area, which may be exposed to a limited hydrocarbon pool fire. Spread of fire along the pipes to adjacent areas should be limited.

c) **ST.IF.EB/030-(3.4)** represents a water-filled firewater ring main running around the outside perimeter of a platform in an open ventilated area, which may be exposed to a limited hydrocarbon pool fire. Spread of fire along the pipes to adjacent areas should be limited.

d) **SF.IF.EB/030-(2.3)** represents piping typical of continuously water-filled systems, either stagnant or stagnant then flowing, such as critical cooling-water supply lines, which may be exposed to a limited hydrocarbon pool fire. No spread of fire is permitted away from area subject to fire, and smoke and toxicity levels should remain acceptable within the evacuation time.

e) **ST.CF.EF/000-(2.2)** represents piping within safe areas such as accommodation, safe refuges and control rooms. Typically these systems transport fresh water, utility water or sewage. The fire type is cellulosic, but in this instance no active fire protection can be relied upon from the sprinkler system. Spread of fire is severely limited, and smoke and toxicity levels should meet the needs of a safe area.

f) **HL.HF.EA/60-(3.4)** represents systems containing hydrocarbon that may be exposed to a conventional hydrocarbon pool fire. No significant spread of fire is permitted, although smoke and toxicity levels may be unlimited. It should be noted that this application is beyond the experience of most fire testing carried out to date.

NOTE 1 The classification codes only provide a first-level guide to performance. Assigned to each code are details of the performance standards, e.g. blast, endurance time, pressure and flow retention, fire spread and smoke/toxicity levels achieved during testing.

NOTE 2 The equivalent IMO Resolution A.753(18) [11] fire endurance requirements are:

a) Level 1: DE.HF.EA/60;

b) Level 2: DE.HF.EA/30;

c) Level 3: ST.IF.EB/30.

F.8 Fire test parameters

The fire test parameters are derived from the fire threat evaluation. Having qualitatively identified the fire type, a fire test method appropriate for that fire type should be identified for the purpose of type-testing GRP piping in accordance with 6.5 of ISO 14692-2:2002.

The goal-setting performance standards previously established in F.5 provide the pass/fail parameters for the tests. In this way the performance-based criteria are clearly identified and given an appropriate prescriptive level as a performance requirement.

© ISO 2002 — All rights reserved

Annex G
(informative)

Static electricity

G.1 General

The guidance in this annex is applicable to both piping and non-piping applications that may involve the use of insulating or semi-insulating materials. The guidance is primarily concerned with static electricity created by transport of liquids in the pipe, but the philosophy can be extended to cover powder transport applications if required.

NOTE 1 Past guidance based on the IMO Regulations for piping is perceived as overly onerous for many offshore situations. This is because IMO Resolution A.753(18) [11] requires that: "Regardless of the fluid being conveyed, plastic pipes should be electrically conductive if the piping passes through a hazardous area". However, electrostatic-related problems in oil and natural gas facilities are as likely to arise as a consequence of external generation mechanisms, as due to flow inside a pipe. In this respect GRP piping is no different from other components that have electrically insulated surfaces, such as electric cables, handrails, grating, passive fire protection (PFP), coated steel, GRP safety equipment lockers, etc. that have always been present in hazardous areas. Such components are not usually required to be made electrically conductive and have not given rise to a major electrostatic problem.

NOTE 2 Coated steel surfaces not subject to high charge are at low risk because of the earthed backing. However, insulated surfaces on a grounded conducting substrate that are potentially subject to high charging are at extreme risk because of propagating brush discharges which are exceedingly energetic and incendive [15]. This may be relevant to some water-filled GRP pipe situations.

A performance-based approach is adopted to limit conductivity, electrostatic dissipative and earthing requirements to just those piping system components that present a risk.

This part of ISO 14692 treats GRP piping covered with a permanent integral outer coating, such as fire protection, in the same manner as plain pipe. However, a different situation arises for piping that is covered with a removable insulation cladding, since the material specification of the cladding is outside the scope of this part of ISO 14692. See G.7.

G.2 Hazard assessment

An energy discharge causes a potential hazard if

— a flammable atmosphere may be present,

— a pipe puncture could release a dangerous fluid,

— minor electric shocks could affect the performance of personnel.

The following factors influence the build-up and discharge of static electricity:

a) method of charge generation;

   This requires flow or movement across either the inside or outside of the pipe.

b) mechanism enabling charge accumulation;

   This requires the material to provide a capacitor, to be electrically isolated from earth and/or have high-resistivity properties.

© ISO 2002 — All rights reserved

c) nature of the electrode structure on the surface of the pipe.

This relates to the availability of a sufficiently energetic electric discharge.

The approach taken to control risks from electrostatic discharges is largely determined by the mechanism of charge generation and opportunity for retention on isolated conductors. Since the threat from electrostatic discharges is primarily concerned with situations where a flammable atmosphere may be present, the threat is a location issue and can be related to the zone classification of hazardous areas. The steps taken to eliminate the hazard from ignition of a flammable atmosphere are likely to address the other more minor issues of electric shocks, which have an impact on safety as well as being an irritation.

The threat from a punctured pipe is considered unlikely, because the circumstances needed to generate sufficient charge are not common in the applications covered by this part of ISO 14692.

G.3 Method of charge generation

G.3.1 Flow inside the pipe

If charge generation is due to internal flow within the pipe, tests have shown [12] that charge accumulation cannot occur if the fluid has a conductivity of more than about 10 000 pS/m. This applies to seawater and crude oil service. A possible exception concerns pipe in which the fluid can take the form of a fine mist that could become electrically charged.

NOTE For most practical situations, for example involving short runs of pipe between earthing points, significant charge accumulation cannot occur if the fluid has a conductivity of more than about 1 000 pS/m. This is the value adopted in IMO Resolution A.753(18) [11].

If the internal fluid has a conductivity less than 10 000 pS/m, for example a refined fluid such as kerosene, then precautions are required to ensure that the pipe cannot become sufficiently charged to cause an incendive discharge from the inside (in the case of a partially filled pipe) or outside of the pipe. This risk is further exacerbated if there are electrically isolated conductive components in or on the pipe, or metal components such as couplings are present that can provide a direct electrical path from the inside to the outside of the pipe. The presence of pumps and filters in the line can also lead to substantial enhancement of the charging current.

The risk of electrostatic charge generation is significantly reduced if the linear velocity of flow is less than 1 m/s and the product of linear velocity (m/s) and diameter (m) remains below 0,5 m^2/s [17].

G.3.2 External charging mechanisms

G.3.2.1 Changing atmospheric electrical fields and lightning strike

Changing atmospheric electrical fields, particularly near thunderstorms, can produce a moderate to strong external charging mechanism, although past experience [13] suggests that fears about inadvertent ignition are unwarranted. In the vicinity of a lightning strike it is possible to produce substantial charge build-up.

It is likely that lightning strike provides a more significant ignition source than any discharge produced from the surface of the GRP pipe. In many situations, the effect of this charge generation mechanism is mitigated by the shielding provided by metal walkways and decks located around the pipe. However, a lightning strike could result in puncturing of a GRP pipe and release of flammable or toxic fluid.

G.3.2.2 Mechanical rubbing (tribocharging)

The risk of significant charge generation due to mechanical rubbing by another insulating material, for example from rubbing of clothing, is generally a remote possibility and would require vigorous rubbing [12].

© ISO 2002 — All rights reserved

G.3.2.3 Interaction with mists and soots produced by high-pressure liquid spray, washing and inert gas operations

Interaction of the surface of the GRP pipe with high-pressure releases of liquids can give rise to the generation of charge from the break-up of a liquid to form a spray or mist. After separation, the liquid droplets retain their charge until they settle out or until a discharge occurs. Discharges observed have tended to be of the non-incendive corona type rather than spark discharges.

The conductivity of the fluid appears to be a factor determining the magnitude of charge density that could be created in a mist or spray. The presence of 5 % of water in kerosene can produce a 1 000-fold increase in the space charge density [14].

G.3.2.4 Interaction with efflux plumes from leaking two-phase fluids

The interaction of the surface of the GRP pipe with the efflux from two-phase high-pressure gas jets is a strong external charging mechanism. It has been more frequently witnessed for carbon dioxide and steam jets [12] but is applicable to process gas that contains a second phase [14]. This mechanism can still act if the GRP pipe is outside the visible jet, but it should be in the immediate vicinity. The risk from process gas is particularly dangerous, since it not only provides the charging mechanism but also the source of hazard from fire and explosion.

The movement of pure gases generates little, if any, electrostatic charge but can carry electrostatic charges on suspended liquid or solid particulate matter, for example on the condensed phase of the process gas. Therefore, as part of the risk assessment, it is necessary to determine whether the efflux of the gas jet of concern could have a significant second phase able to convey the electrostatic charge [15].

NOTE The source of charge separation is likely to be at the high-pressure leak orifice. Therefore the velocity of the second phase past the GRP pipe is a less important factor for generating charge since the second phase is already charged, and the charge can be readily deposited onto the GRP pipe.

In view of the significant momentum that may be present in a jet from a gas leak, it may be possible for significant charge accumulation to be produced on GRP piping located some distance from the leak source. However, for most practical situations it is unlikely this distance will exceed 12 m and it is recommended that most attention be paid to leak sources that are less than 3 m from the GRP pipe. The designer should give consideration to determining whether an alternative maximum distance is appropriate.

G.4 Accumulation of charge

In most practical circumstances it is necessary for the discharge to have an energy equivalence greater than about 0,2 mJ for ignition of hydrocarbon vapours to take place [12].

NOTE BS 5958-1 [15] gives the minimum ignition energy for hydrocarbon gases as 0,01 mJ to 1,0 mJ.

The risk of incendive discharge is greatest if electrically isolated metal components, e.g. flange bolts, deluge nozzles and couplings, are present on the outside of the pipe to provide a capacitance store of electrical energy. The amount of capacitance depends on the dimensions of the metal component and whether it is located near an earthed object such as a pipe support or bulkhead. An indication of the size of metal components likely to be affected can be estimated from the minimum energy and electric potential required for an incendive discharge. These are related by the equation

$$\text{Energy of a charged surface } E = 0{,}5\ C \cdot V^2 \qquad \text{(G.1)}$$

This shows that the capacitance C needed is strongly dependent on the field potential V available. If the metal object is located close to the walls or decks, a geometric factor limits the magnitude of potential to which the object can be exposed. However, the close proximity of a metal object to an earthed plane increases the capacitance and reduces the voltage required to produce an incendive spark.

© ISO 2002 — All rights reserved

Unfortunately there is little information available to enable the designer to make an accurate assessment of the magnitude of voltage that could be present in some situations. If values of 0,2 mJ and 1 000 V are assumed for the energy and electric potential, then a capacitance of about 400 pF is needed to produce an incendive discharge. If 20 000 V are assumed for the electric potential, then a much smaller capacitance of about 1,0 pF is needed to produce an incendive discharge. For a relatively isolated object, the capacitance is reasonably accurately given by equation (G.2), which takes into account the distance of a cylinder from an earthed plane. On this basis, it can be seen that a capacitance of 400 pF corresponds to a very large object, while a relatively small object of just a few tens of millimetres in size can produce a capacitance of 1,0 pF.

The accumulation of charge is not just restricted to metal components. If the GRP has a wetted or contaminated surface, this can result in significant capacitance, particularly for large-diameter pipes. *This also highlights the danger that may arise if regions of conductive paint applied to the outside of the GRP pipe become detached, leaving an isolated section of conductive paint that can provide a large capacitor for electric charge.* If very high voltages can be generated and there is a risk of brush discharge or propagating brush discharge, the GRP itself can provide the capacitance store.

The capacitance per unit length, in farads, of an isolated cylinder is given by Equation (G.2).

$$C = \varepsilon_r \cdot \varepsilon_o \cdot \left[\frac{2\pi}{\ln\left(\left[h + \left(h^2 - r_m{}^2 \right)^{0,5} \right] / r_m \right)} \right] \qquad \text{(G.2)}$$

where

r_m is the radius of the metal component, in metres;

h is the distance from the earthed plane to the axis of the component, in metres.

For air, $\varepsilon_r = 1$ and $\varepsilon_o = 8,85 \times 10^{-12}$ F/m.

A simpler expression for the capacitance, in picofarads, of an isolated sphere is given in Equation (G.3).

$$C = 100\ r_m \qquad \text{(G.3)}$$

The capacitance between two finite parallel planes is given by Equation (G.4).

$$C = \varepsilon_r \cdot \varepsilon_o \cdot A/y \qquad \text{(G.4)}$$

where

A is the area of the planes, in square metres;

y is the distance between the planes, in metres.

G.5 Conditions for an incendive discharge

For an electrostatic hazard to occur, it is necessary for the accumulated charge to be able to dissipate as an incendive discharge. This concerns three principal types of discharge:

— spark discharge, which requires two conducting electrodes at different potentials;

— brush discharge, which requires a curved but not pointed conducting electrode at earth potential in the vicinity of an isolated electrically charged region (that can be a surface or mist, etc.). The localized energy density in a brush discharge is generally not high, but could be high enough to be incendive [15];

© ISO 2002 — All rights reserved

— propagating brush discharge, which requires a curved but not pointed conducting electrode at earth potential in the vicinity of an electrically isolated surface that is backed by a conductor at earth potential. The result is an intense and highly energetic spark-like discharge, which can be very dangerous [15].

The conditions needed to produce an incendive spark depend on the capacitance of the isolated metal object, the magnitude of voltage induced or deposited on the GRP/isolated steel, and the distance to an earthed object. For most situations, the electric potential must exceed 1 000 V for ignition of hydrocarbon vapours to take place. To produce an incendive spark discharge, the isolated metal objects must be in reasonably close proximity of an earthed object. In clean air, more than 14 kV is needed to produce an incendive discharge across a 12-mm gap between needle-point electrodes (20 kV for spherical electrodes [13]).

The conditions required to produce an energetic brush discharge from an earthed conductor close to an insulating surface, e.g. GRP or charged mist, requires higher potentials, perhaps within the range 25 kV to 60 kV [12]. Propagating brush discharges are particularly energetic, but require potentials in excess of 60 kV and the thickness of the insulating layer to be less than 8 mm [13]. A water-filled non-conductive GRP pipe with a wall thickness less than 8 mm in the vicinity of a leaking process gas flange could in principle provide a source for a propagating brush discharge.

The presence of unearthed conducting components on the outside of the pipe is an important factor influencing the ability to produce an incendive spark discharge, since it provides an electrode that more efficiently transfers energy into any discharge with the result that ignition can arise at much lower potentials than discharges directly from the GRP insulating material. It is also normally necessary to assume that the pipe does support a non-earthed conductor, such as a patch of relatively conductive dirt or water, which lowers the potential needed for ignition.

G.6 Control of electrostatic charge

G.6.1 General

To minimize the risk of electrostatic charge accumulation, it is necessary to ensure that electrically isolated metal objects of significant size located on the surface of the GRP pipe, e.g. couplings, are reliably earthed. Since this is not always practical to apply to the entire piping system, a risk-based approach should be adopted to identify areas at greatest risk.

If it is not practicable to ensure all metal objects can be individually and reliably earthed, it may be necessary to make the pipe electrically conductive to provide a path to earth. This may be necessary for pipes in tanks, because earth braids corrode rapidly and may not be accessible for inspection.

For some applications, it may be necessary to also ensure that the GRP itself always is adequately earthed and therefore electrostatic dissipative, for example if there is persistent tribocharging, significant risk of exposure to the efflux from a two-phase jet or if the GRP can be charged by fluid flowing inside the pipe.

If the pipe is used to transfer non-electrically conducting liquids, there is also a need to control the time period for filling and draining of flammable liquids from the pipe since incendive discharges may also occur inside the pipe, particularly after the fluids have passed through a filter.

G.6.2 Requirements for resistance to earth

If there is risk from electrostatic charge, BS 5958-1 [15] and IMO Resolution A.753(18) [11] recommend that the resistance to earth should not at any point exceed 10^6 Ω. However, BS 5958 also recognizes that this value is conservative since it is designed to be suitable under the most onerous conditions. This is the situation for strong electrostatic charge generation mechanisms, such as the interaction of the surface of the GRP pipe with the efflux from two-phase high-pressure gas jets, and if charge generation is due to internal flow within the pipe with the presence of pumps and filters in the line that can lead to substantial enhancement of the charging current.

© ISO 2002 — All rights reserved

BS 5958-1 [15] proposes that a higher limit of resistance to earth limit of 10^8 Ω may be specified if it is certain there are no strong generation processes and suggests that even higher resistance can be safely tolerated in many applications. An analysis of the information given in [12] identifies situations where this may apply, for example:

a) if charge generation is due to internal flow within the pipe and there are no pumps and filters in the line (see NOTE 1);

b) if charge generation is due to changing atmospheric electrical fields (see NOTE 2);

c) if charge generation is due to interaction of the surface of the GRP pipe with the high-pressure releases of liquids that can give rise to the generation of charge from the break-up of a liquid to form a spray or mist (see NOTE 3).

NOTE 1 For a 0,4 m diameter GRP line used to carry refined product, it is estimated [12] that the resistance to earth needs to be kept to less than about 1×10^9 Ω.

NOTE 2 For an exposed pipe located several metres above the ground or deck, it is estimated [12] that a resistance to earth of 1×10^8 Ω is adequate to protect against changing atmospheric electrical fields. However, a resistance to earth that is one magnitude higher, i.e. 1×10^9 Ω, would probably suffice in most circumstances.

NOTE 3 The worst-case requirement for resistance to earth for tank-washing operations is estimated [12] to be about 1×10^9 Ω. For most situations, reference [12] suggests that the required resistance to earth could be one to two orders of magnitude higher, i.e. 10^{10} Ω to 10^{11} Ω.

BS 5958-1 [15] also suggests that for many applications the retention of charge can be avoided if the surface resistivity is kept below a certain magnitude. Another approach, for where there are concerns about explosions and electrostatic discharge, is to require rigid ventilation ducting made from GRP materials to have a surface resistivity that does not exceed $1{,}2 \times 10^9$ Ω [16]. In the case of high-resistivity materials, BS 5958-1 [15] proposes that the need for earthing can be dispensed with if it can be shown that significant charge accumulation will not occur. In the absence of charge accumulation, BS 5958 does not require components to be earthed that are located in zone 2 areas (i.e. zone in which an explosive atmosphere is not likely to occur in normal operation, and if it occurs it will exist only for a short time).

G.6.3 Requirements for pipe conductivity

For some situations there may be no need for the pipe itself to be made conductive, although it may be necessary to ensure that metal components in the line are adequately earthed.

In other situations, it will be necessary to make the pipe conductive for one or more of the following reasons:

a) there is risk of an incendive brush or propagating brush discharge from the surface of the GRP itself;

b) there is a risk of an incendive spark discharge from conductive patches on the surface of the GRP;

c) there is persistent risk of tribocharging from rubbing contact with an insulating material;

d) there is the risk of charge being transferred to a hazardous area by personnel who come into direct contact with the outside surface of the pipe;

e) it is not practical to individually earth all metallic objects on the pipe.

The resistance per unit length of the pipe component depends on the required resistance to earth at the maximum distance from the nearest earth-grounding clamp.

In addition, as indicated in G.6.2, it may be possible to accept a higher resistance to earth if it can be shown that the resistivity of the material is below 10^9 Ω.

The means of making GRP piping conductive are discussed in G.6.4.

© ISO 2002 — All rights reserved

G.6.4 Electrical properties of the pipe material

GRP pipe components may be of four types:

a) plain GRP where no additional measures have been taken to enhance the electrical conduction properties;

b) components that incorporate a network of conductive filaments within the wall of the pipe;

c) components that have a conductive resin through the wall of the pipe;

d) components that have a conductive coating painted on the outside.

In some circumstances, depending on the resin system, GRP pipes exposed to a conductive fluid such as seawater over a period of time may permanently develop a lower value of surface resistivity and may provide adequate protection against accumulation of electrostatic charge. If the outside of the pipe is exposed to the marine environment, i.e. sea spray, high humidity, immersion in tank, etc., a similar lowering of the surface resistivity may take place.

Pipes that incorporate conductive elements in their construction may have a surface layer with high electrical resistivity properties that prevent the component from complying with the requirements for resistance to earth taken at any point on the pipe. Measurements based on the charge shielding, charge decay and surface resistivity properties provide an alternative means to determine whether significant charge can accumulate in areas of concern. The charge-shielding test determines whether charge generated on the inside of the pipe is able to accumulate in significant quantity on the outside of the pipe. The charge-decay test determines the rate of decay of electrostatic charge present on the exterior surface of a grounded GRP pipe, fitting or joint when a charge is briefly applied to the exterior surface. Details of these tests are given in G.3 and G.4 of ISO 14692-2:2002.

NOTE 1 If a pipe passes the decay test, the generation of localized high potentials, by e.g. tribocharging, is unlikely to occur. However, it is a localized test so the generation of high potentials by the action of extended charging mechanisms (e.g. due to changes in external space potentials) is not prevented and there is not necessarily protection against internal charging due to liquid flow.

NOTE 2 If a pipe passes the surface resistivity test, the outer layer can dissipate a modest amount of charge. However, depending on pipe geometry, resistances up to 10^{10} Ω could occur, so only weak and some moderate charge generation mechanisms are guarded against.

If components incorporate a network of conductive elements, there should be no electrically isolated conductors which cannot be connected to earth in the normal manner using a grounding clamp. In particular, there should be no direct current path from the inside to the outside of the pipe by electrically isolated conducting filaments.

It is recommended that external conductive coatings should not be applied in the field to GRP pipe that is located in regions not readily accessible during service for inspection. See G.4.

G.6.5 Ensuring continuity of conductive path to earth

The contents of the inside of the pipe should be connected to earth at a minimum of one exposed earthing point in the system.

For pipes that contain a fluid with a conductivity of less than 10 000 pS/m and which may not always be completely filled with liquid, the inside of the pipe should be earthed at the lowest point of the system and at locations where liquid can become trapped.

The resistance to earth includes contribution from both the main pipe components and the coupling resistances between components. The ability to achieve the required minimum degree of conductivity in the piping system can be compromised if the design of a joint does not provide the correct conductive path. This is easier to achieve with pipe systems that rely on the use of a conductive resin than the case where a

© ISO 2002 — All rights reserved

network of layers of conducting fibres is used, because contact with the relevant conductive layer may be missed. The piping assembly procedure should include checks of the conductivity across the joint to ensure the joint and pipes are able to provide the required conductive path.

Pipes that incorporate embedded conducting elements within their structure should be correctly grounded to earth, especially if strong electrostatic charging mechanisms may be present. If not, this type of construction can provide a greater electrostatic hazard than if the conducting fibres had not been present, because the pipe will behave like a capacitor.

If the GRP is coated with a conductive paint to provide the necessary electrical path, it is important that there be a reliable electrical bond between the pipe and metal objects attached to the pipe, for example deluge nozzles and support hangers. Reliance should not be placed on the integrity of the paint applied over a fitting, since a crack in the paint may result in the formation of an isolated conductor that is fractions of a millimetre away from an earthed conductor and across which an incendive spark can easily jump. In these situations it is necessary to provide an independent means of providing a good conductive path between the pipe and support, for example by use of an adhesive-backed copper tape.

G.6.6 Effect of humidity

Hazardous levels of electrostatic charges can be accumulated only on bodies that are electrically isolated from each other and from the ground. The accumulation of charge is therefore greatly influenced by humidity. During periods of normal humidity (50 % or more), an invisible film of water may enable a continuous monomolecular layer to form on the surface, which produces a rapid rise in surface conductivity [17]. In desert and arctic conditions and in areas with comparable periods of dryness, reliance on humidity leakage is not sufficient and should be supplemented by earth bonding.

At lesser humidity levels, water molecules absorbed onto the surface provide intrinsic sites for ions to reside, which can increase surface charge density and exacerbate the risk of electrostatic discharge by providing localized areas from which incendive discharges can occur [13].

G.7 Pipe with removable cladding

In a hazardous area where the GRP piping system is entirely covered by cladding and the source of electrostatic charge is due to external mechanisms only, the control of electrostatic discharge is determined more by the electrical properties of the cladding than the piping. In such situations, there may be less need for the GRP piping to be conductive, since it is the electrical properties of the cladding that may be at issue rather than those of the GRP pipe, although charge accumulation on isolated metal components underneath the cladding could present a potential ignition source in a hazardous area. This part of ISO 14692 places no mandatory requirement for such cladding to have electrostatic dissipative properties, although it is recommended that the designer consider the situation and take action accordingly.

If isolated metallic components of significant size, e.g. valves, are exposed or present under the cladding, precautions may be required to ensure these are earthed.

© ISO 2002 — All rights reserved

Annex H
(informative)

Inspection strategy

H.1 General

This procedure, which is based on NORSOK M-622 [17], is considered suitable for developing comprehensive inspection strategies for GRP systems and constructions.

A system is non-critical if

a) failure will not result in injury to personnel,

b) failure will not result in unacceptable economic consequences,

c) acceptable functionality is maintained even if the most likely failure modes occur,

d) the operating pressure is significantly less than nominal design pressure, e.g. the system includes open drains, cooling-water systems.

A system is considered ready and available for testing if it is:

— physically accessible;

— not prohibitively expensive to prepare for pressure testing (i.e. blinding off joints, blocking deluge nozzles, etc.).

H.2 Condition monitoring

Table H.1 gives suggested inspection programmes based on the likelihood of defects or degradation occurring and the criticality of the system. The interactions between materials and process conditions should be considered when selecting condition-monitoring methods. This entails a comprehensive materials engineering evaluation that considers the most probable failure/degradation mechanisms and defects. Relevant non-destructive testing (NDT) methods should be selected if possible, bearing in mind the possibilities and limitations of each method. A combination of several methods may be required in order to achieve safe and cost-effective utilization of the equipment/system. Suggested inspection intervals are given in Table H.2.

The selection of an inspection programme should be based on a thorough evaluation of the consequences of failure. Assessment of the likelihood and severity of failure should be based on parameters such as previous experience, material properties, design of process units, operating process conditions, etc.

The inspection programmes in Table H.2 include the use of destructive testing of material samples to characterize long-term material degradation under the most aggressive operating conditions, and as a justified means to extend GRP equipment past its rated life. Such material samples should be representative of the equipment in-service, i.e. by testing a pipe sample removed from service, or by testing coupons which have been exposed to the same media and stress levels that are seen in service. If the initial materials engineering evaluation indicates that destructive tests are required, the same test methods as those used to pre-qualify the material should be used.

© ISO 2002 — All rights reserved

Table H.1 — Selection of inspection programme

Equipment classification	Probability of failure	Severity (consequence) of failure	Inspection programme (see Table H.2)
Critical	High	High	A
		Medium	A
		Low	B
	Medium	High	A
		Medium	B
		Low	C
	Low	High	B
		Medium	C
		Low	C
General	High	High	A
		Medium	B
		Low	C
	Medium	High	B
		Medium	C
		Low	D
	Low	High	B
		Medium	D
		Low	D

NOTE Seawater systems are typically Programme D, and sometimes Programme C, since these systems have a demonstrated low probability of failure once commissioned. When failure occurs it is most often limited to weeping (i.e. a low-flow leak through the GRP pipe wall) or leaking gaskets/joints, which do not impair function.

© ISO 2002 — All rights reserved

Table H.2 — Recommended NDT methods and inspection intervals

	Inspection programme			
	A	B	C	D
Inspection methods	Visual inspection, internal/external Other NDT (most suitable method for degradation mechanisms) Destructive testing of material samples exposed to the actual process conditions	Visual inspection, internal/external Other NDT (most suitable method for degradation mechanisms) Destructive testing of material samples exposed to the actual process conditions	Visual inspection, internal/external Other NDT (most suitable method for degradation mechanisms) Destructive testing of material samples exposed to the actual process conditions	Visual inspection, internal/external
Inspection frequency:				
First Inspection (years after start of service)	0,5 to 1	0,5 to 1	1 to 2	1 to 2
Inspection interval (years)	1 to 2	2 to 3	0,2 × service life	0,3 × service life
Comments:	Inspection interval should be reduced if results from previous inspection show severe degradation All inspection methods listed should be applied during every inspection Inspection programme B can be applied when sufficient confidence in the material and construction performance has been gained. At the earliest, this should be considered after 5 years service.	Inspection interval should be reduced if results from previous inspection show severe degradation All inspection methods should be applied during the first inspection, while the following inspections can alternate between destructive and non-destructive methods. Inspection programme C can be applied when sufficient confidence in material and construction performance has been gained. At the earliest, this should be considered after 5 years service.	Inspection interval should be reduced if results from previous inspection show severe degradation Destructive testing is required if the service life has extended beyond the originally estimated service life Inspection programme D can be applied to process equipment classified as "General" when sufficient confidence has been gained. At the earliest, this should be considered after 5 years service.	Destructive testing is required if the service life has extended beyond the originally estimated service life

© ISO 2002 — All rights reserved

Bibliography

[1] BS 4994, *Specification for design and construction of vessels and tanks in reinforced plastics*, British Standards Institution

[2] ISO 13703, *Petroleum and natural gas industries — Design and installation of piping systems on offshore production platforms*

[3] DNV RP 0501, *Erosive wear in piping systems*

[4] ISO 7005-3, *Metallic flanges — Part 3: Copper alloy and composite flanges*

[5] ISO 15649, *Petroleum and natural gas industries — Piping*

[6] ASME B16.5, *Pipe flanges and flanged fittings — NPS ½ through NPS 24*

[7] WANG, D.T., ANISDAHL, L. and STOKKE, R. *Determination of GRP pipe bend flexibility fore use in piping engineering*, Proc. Second International Conf. Composite Materials for Off-shore Operations, University of Houston, Texas, November 1996

[8] KITCHING, R. and TANG, W.M. Comparison of glass reinforced plastic T-junction/straight pipe combinations for offshore use, *Int. J pressure vessels and piping*, **71**(3), 1997, p. 263

[9] ISO 5660-1, *Reaction-to-fire tests — Heat release, smoke production and mass loss rate — Part 1: Heat release rate (cone calorimeter method)*

[10] IMO MSC.61(67) (Part 2 of Annex), *Adoption of the International Code for application of Fire Test Procedures* (FTP Code)

[11] IMO Resolution A.753(18), *Guidelines for the Application of Plastic Pipes on Ships*

[12] WALMSLEY, H.L. *Charge relaxation in pipes*, 6th Conf. Electrostatics Phenomena, Institute of Physics, Oxford, April 1983

[13] PRATT, T. *Electrostatic Ignitions of Fires and Explosion*, ISBN 0-9659092-4, Burgoyne Inc., 1997

[14] LEES, F.P. *Loss Prevention in the Process Industries: Hazard identification, Assessment and Control*, Vol. 2, 2nd ed., Butterworth Heineman, 16/84 to 16/133

[15] BS 5958-1, *Code of practice for control of undesirable static electricity — Part 1: General considerations*

[16] API RP 2003, *Protection against ignitions arising out of static, lightning, and stray currents*

[17] NORSOK M-622, *Guideline for NDT of GRP piping systems and tanks*

[18] API Spec 15HR, *Specification for high pressure fiberglass line pipe*

[19] *Specification and recommended practice for use of GRP piping offshore*, UK OOA, 1st ed., 1994

[20] ASME B31.3, *Process piping*

© ISO 2002 — All rights reserved

ICS 75.200; 83.140.30

Price based on 79 pages

© ISO 2002 — All rights reserved