INTERNATIONAL STANDARD

ISO 12215-9

First edition
2012-06-15

Small craft — Hull construction and scantlings —

Part 9: Sailing craft appendages

Petits navires — Construction de la coque et échantillonnage —

Partie 9: Appendices des bateaux à voiles

Reference number
ISO 12215-9:2012(E)

© ISO 2012

Copyright International Organization for Standardization

COPYRIGHT PROTECTED DOCUMENT

© ISO 2012

All rights reserved. Unless otherwise specified, no part of this publication may be reproduced or utilized in any form or by any means, electronic or mechanical, including photocopying and microfilm, without permission in writing from either ISO at the address below or ISO's member body in the country of the requester.

ISO copyright office
Case postale 56 • CH-1211 Geneva 20
Tel. + 41 22 749 01 11
Fax + 41 22 749 09 47
E-mail copyright@iso.org
Web www.iso.org

Published in Switzerland

Copyright International Organization for Standardization
© ISO 2012 – All rights reserved

Contents

Page

Foreword iv
Introduction v
1 **Scope** 1
2 **Normative references** 1
3 **Terms and definitions** 2
4 **Symbols** 3
5 **Design stresses** 4
6 **Structural components to be assessed** 6
7 **Load cases** 6
7.1 **General** 6
7.2 **Load case 1 — Fixed keel at 90° knockdown** 7
7.3 **Load case 2 — Canted keel steady load at 30° heel with dynamic overload factor** 8
7.4 **Load case 3 — Keelboat vertical pounding** 9
7.5 **Load case 4 — Keelboat longitudinal impact** 10
7.6 **Load case 5 — Centreboard on capsize recoverable dinghies** 11
7.7 **Load case 6 — Centreboard or dagger board upwind** 11
7.8 **Other load cases** 12
8 **Computational methods** 15
8.1 **General** 15
8.2 **General guidance for assessment by 3D numerical procedures** 15
8.3 **Assessment by strength of materials/non-computational-based methods** 16
9 **Compliance** 16
Annex A (normative) **Application declaration** 18
Annex B (informative) **Information on metal for appendages and fasteners and "established practice" for fastening and welding** 19
Annex C (informative) **"Established practice" structural arrangement for ballast keels** 30
Annex D (informative) **"Established practice" calculation of keel fin strength (fixed or canting) and fixed ballast keel connected by bolts** 44
Annex E (informative) **Geometrical properties of some typical appendage foil shapes** 61
Annex F (informative) **Simplified fatigue strength assessment** 64
Bibliography 76

Copyright International Organization for Standardization © ISO 2012 – All rights reserved

Foreword

ISO (the International Organization for Standardization) is a worldwide federation of national standards bodies (ISO member bodies). The work of preparing International Standards is normally carried out through ISO technical committees. Each member body interested in a subject for which a technical committee has been established has the right to be represented on that committee. International organizations, governmental and non-governmental, in liaison with ISO, also take part in the work. ISO collaborates closely with the International Electrotechnical Commission (IEC) on all matters of electrotechnical standardization.

International Standards are drafted in accordance with the rules given in the ISO/IEC Directives, Part 2.

The main task of technical committees is to prepare International Standards. Draft International Standards adopted by the technical committees are circulated to the member bodies for voting. Publication as an International Standard requires approval by at least 75 % of the member bodies casting a vote.

Attention is drawn to the possibility that some of the elements of this document may be the subject of patent rights. ISO shall not be held responsible for identifying any or all such patent rights.

ISO 12215-9 was prepared by Technical Committee ISO/TC 188, *Small craft*.

ISO 12215 consists of the following parts, under the general title *Small craft — Hull construction and scantlings*:

— *Part 1: Materials: Thermosetting resins, glass-fibre reinforcement, reference laminate*

— *Part 2: Materials: Core materials for sandwich construction, embedded materials*

— *Part 3: Materials: Steel, aluminium alloys, wood, other materials*

— *Part 4: Workshop and manufacturing*

— *Part 5: Design pressures for monohulls, design stresses, scantlings determination*

— *Part 6: Structural arrangements and details*

— *Part 7: Scantling determination of multihulls*

— *Part 8: Rudders*

— *Part 9: Sailing craft appendages*

Copyright International Organization for Standardization
© ISO 2012 – All rights reserved

Introduction

The reason underlying the preparation of this part of ISO 12215 is that standards and recommended practices for loads on the hull and the dimensioning of small craft differ considerably, thus limiting the general worldwide acceptability of craft.

The loss of a keel leading to craft capsize is one of the major casualty hazards on sailing craft and therefore the structural efficiency of all elements of the keel and its connection to the craft is paramount.

This part of ISO 12215 specifies the design loads and their associated stress factors. The user then has a choice between one or the other of the following available options for assessing the structural arrangement.

a) Use of advanced engineering methods which allow the structure to be modelled as three-dimensional: suitable methods include finite element analysis and subsets thereof such as matrix displacement or framework methods. General guidance is provided on modelling assumptions within this part of ISO 12215.

b) Use of simplified, generally two-dimensional, “strength of materials”-based stress equations: These are presented in Annexes B to F and, if this option is chosen, use of the equations will be necessary to fulfil the requirements of this part of ISO 12215.

This part of ISO 12215 has been developed applying present practice and sound engineering principles. The design loads and criteria of this part of ISO 12215 may be used with the scantling determination equations of this part of ISO 12215 or using equivalent engineering methods as indicated in a), above.

The dimensioning according to this part of ISO 12215 is regarded as reflecting current practice, provided the craft is correctly handled in the sense of good seamanship and equipped and operated at a speed appropriate to the prevailing sea state.

During the latter stages of the development of the ISO 12215 series, and after publication of key parts, a number of authorities adopted this International Standard for the assessment of high-performance racing yachts. While, in theory, a category A blue-water cruising yacht could experience the same loads as a competitive racing yacht, the latter has not been the principal focus of ISO 12215. Consequently, designers are strongly cautioned against attempting to design high-performance racing craft such that nearly all structural components only just comply.

Copyright International Organization for Standardization © ISO 2012 – All rights reserved

Copyright International Organization for Standardization

Small craft — Hull construction and scantlings —

Part 9:
Sailing craft appendages

1 Scope

This part of ISO 12215 defines the loads and specifies the scantlings of sailing craft appendages on monohull sailing craft with a length of hull, L_H, of up to 24 m, measured according to ISO 8666. It gives

— design stresses,

— the structural components to be assessed,

— load cases and design loads for keel, centreboard and their attachments,

— computational methods and modelling guidance, and

— the means for compliance with its provisions.

2 Normative references

The following referenced documents are indispensable for the application of this document. For dated references, only the edition cited applies. For undated references, the latest edition of the referenced document (including any amendments) applies.

ISO 898-1, *Mechanical properties of fasteners made of carbon steel and alloy steel — Part 1: Bolts, screws and studs with specified property classes — Coarse thread and fine pitch thread*

ISO 3506-1, *Mechanical properties of corrosion-resistant stainless steel fasteners — Part 1: Bolts, screws and studs*

ISO 8666, *Small craft — Principal data*

ISO 12215-3, *Small craft — Hull construction and scantlings — Part 3: Materials — Steel, aluminium alloys, wood, other materials*

ISO 12215-5:2008, *Small craft — Hull construction and scantlings — Part 5: Design pressures for monohulls, design stress, scantlings determination*

ISO 12215-6:2008, *Small craft — Hull construction and scantlings — Part 6: Structural arrangements and details*

ISO 12217-2, *Small craft — Stability and buoyancy assessment and categorization — Part 2: Sailing boats of hull length greater than or equal to 6 m*

Copyright International Organization for Standardization

3 Terms and definitions

For the purposes of this document, the following terms and definitions apply.

3.1
design category
sea and wind conditions for which a craft is assessed to be suitable, provided the craft is correctly handled in the sense of good seamanship and operated at a speed appropriate to the prevailing sea state

3.1.1
design category A
"ocean category"
category of craft considered suitable to operate in seas with significant wave heights above 4 m and wind speeds in excess of Beaufort Force 8, but excluding abnormal conditions such as hurricanes

3.1.2
design category B
"offshore category"
category of craft considered suitable to operate in seas with significant wave heights up to 4 m and winds of Beaufort Force 8 or less

3.1.3
design category C
"inshore category"
category of craft considered suitable to operate in seas with significant wave heights up to 2 m and a typical steady wind force of Beaufort Force 6 or less

3.1.4
design category D
"sheltered waters category"
category of craft considered suitable to operate in waters with significant wave heights up to and including 0,3 m with occasional waves of 0,5 m height, for example from passing vessels, and a typical steady wind force of Beaufort 4 or less

3.2
loaded displacement mass
m_{LDC}
mass of the craft, including all appendages, when in the fully loaded ready-for-use condition as defined in ISO 8666

NOTE 1 The displacement includes all possible options (generator, air conditioning, etc.).

NOTE 2 The loaded displacement mass is expressed in kilograms.

3.3
sailing craft
craft for which the primary means of propulsion is wind power, having $A_{\mathrm{S}} > 0{,}07(m_{\mathrm{LDC}})^{2/3}$ where A_{S} is the total profile area of all sails that may be set at one time when sailing closed hauled, as defined in ISO 8666 and expressed in square metres

NOTE 1 For the headsails, A_{S} considers the area of the fore triangle.

NOTE 2 The area of the wing-mast(s) is included in A_{S}.

3.4
mass of keel
m_{KEEL}
mass of the ballast keel, i.e. keel fin plus bulb, where fitted, and, for twin or multiple keels, of a single keel

NOTE The mass of keel is expressed in kilograms.

Copyright International Organization for Standardization
© ISO 2012 – All rights reserved

4 Symbols

For the purposes of this document, unless specifically otherwise defined, the symbols given in Table 1 apply.

Table 1 — Symbols, coefficients, parameters in the main core of ISO 12215-9

Symbol	Unit	Designation/meaning of symbol	(Sub)clause/table concerned
A_{CB}	m²	Area of fully deployed centreboard	7.7.1
A_S	m²	Reference sail area (mainsail + fore triangle + wing mast) as per ISO 12217-2	7.7.1
a	m	Distance along keel centreline, from centre of gravity (CG) of keel to keel junction with hull or tuck	7
c	m	Distance along keel centreline from keel junction to floor mid-height	7
c_a	m	Average value of c for several floors	7.5
e	m	Proportion of the total side force taken by the centreboard	7.7.1
F_i	N	Design force with i according to load case	7
g	m/s²	Acceleration of gravity = 9,81 m/s²	7
h_{CE}	m	Height of centre of area of A_S	7.7.1
h_K	m	Height of keel between its bottom and hull connection	7.5.2
h_{F4}	m	Height of application of force F_4 (load case 4)	7.5.2
k_{DC}	1	Design category coefficient	5, Table 2
k_{LC}	1	Load case coefficient	5, Table 3
k_{LD}	1	Length displacement coefficient	7.7.1
k_{MAT}	1	Material coefficient	5, Table 2
L_{WL}	m	Length of waterline in m_{LDC} conditions	7.5.2, 7.7.1
m_{LDC}	kg	See definition 3.2	3.2, 7
m_{KEEL}	kg	See definition 3.4	3.4, 7.4
M_{IJ}	N·m	Design bending moment, with index I and J according to load case	7
st_i	N/mm²	Stress, which can be σ or τ, and where i can be LIM, d, u, y, yw or yu	5
α	deg.	Angle of attack of centreboard foil	7.7
ε_R	%	Elongation at break	Table 2
θ	deg.	Angle between keel axis and centreline for canting keels	7.3

Copyright International Organization for Standardization

5 Design stresses

The maximum stress shall be calculated for each relevant structural component and load case.

The design stress, st_{d}, is the relevant limit stress multiplied by various stress coefficients:

$$st_{\mathrm{d}} = st_{\mathrm{LIM}} \times k_{\mathrm{MAT}} \times k_{\mathrm{LC}} \times k_{\mathrm{DC}} \ \mathrm{N/mm^2} \tag{1}$$

where

st_{LIM} is the limit stress, with st representing either σ, in direct stress, or τ, in shear stress, and index LIM is as follows:

— for metal in unwelded state or well clear of HAZ, $\min\left(st_{\mathrm{y}};0{,}5 \times st_{\mathrm{u}}\right)$, where index y is the yield strength and index u is the ultimate strength, i.e. $\sigma_{\mathrm{y}},\sigma_{\mathrm{u}}$ for direct stress, $\tau_{\mathrm{y}},\tau_{\mathrm{u}}$ for shear stress and $\sigma_{\mathrm{by}},\sigma_{\mathrm{bu}}$ for bearing stress;

— for metal within HAZ, $\min\left(st_{\mathrm{yw}};0{,}5 \times st_{\mathrm{uw}}\right)$, where index y is the yield strength and index u is the ultimate strength, i.e. $\sigma_{\mathrm{yw}},\sigma_{\mathrm{uw}}$, for direct stress, $\tau_{\mathrm{yw}},\tau_{\mathrm{uw}}$ for shear stress and for $\sigma_{\mathrm{byw}},\sigma_{\mathrm{buw}}$ bearing stress;

— for wood and fibre-reinforced polymer (FRP), the ultimate strength in tensile σ_{tu}, compressive σ_{cu}, flexural σ_{fu}, bearing, σ_{bu} or shear stress τ_{u};

k_{MAT} is the material coefficient as defined in Table 2, with the design stress adjusted according to the material;

k_{LC} is the load case coefficient as defined in Table 3, with the design stress adjusted according to the load case;

k_{DC} is the design category coefficient as defined in Table 2, with allowance for an increase in design stress for lower design categories due to less severe dynamic loadings than in higher design categories.

Table 2 gives details on these variables.

The values of st_{LIM} — i.e. $\sigma_{\mathrm{y}},\sigma_{\mathrm{u}},\tau_{\mathrm{u}}$ for unwelded metals, $\sigma_{\mathrm{yw}},\sigma_{\mathrm{uw}},\tau_{\mathrm{yw}},\tau_{\mathrm{uw}}$ for welded metals in a heat-affected zone (HAZ), or σ_{tu}, σ_{cu}, σ_{fu}, σ_{bu} or τ_{u} for wood and FRP — shall be taken

— in accordance with ISO 12215-5:2008, i.e. according to tests or default values specified in its Annex C for FRP, its Annex D for sandwich core, and its Annex E for laminated wood and plywood,

— in accordance with Annex B for the listed metals, including, where relevant, ISO 3506-1 for stainless steel fasteners and ISO 898-1 for carbon steel or alloy steel fasteners, and

— for other metals, either from a recognized standard or from tests made in accordance with the relevant International Standard.

Copyright International Organization for Standardization
© ISO 2012 – All rights reserved

Table 2 — Design stresses and stress coefficients

Variable	Material/designation	Value
st_{LIM}	Metals, unwelded or well clear of HAZ[a]	min.$\left(st_y;0,5\times st_u\right)$ [b,c]
	Metals, within HAZ, in welded condition[a]	min.$\left(st_{yw};0,5\times st_{uw}\right)$ [b,c]
	Wood or FRP as dictated by sense of applied stress	$\sigma_{uc},\sigma_{ut},\sigma_{uf},\sigma_{ub}$ and τ_u as relevant[c]
k_{MAT}	**Stress factor**	
	Metals with elongation at break, ε_R % ≥ 7	0,75
	Metals with elongation at break, ε_R % <7	min.(0,0625ε_R + 0,3125;0,75)[d]
	Wood and FRP	0,33
k_{LC}	**Stress factor** (see Table 3)	
k_{DC}	**Stress factor**	
	Craft of design categories A and B	1,00
	Craft of design categories C and D	1,25

a Generally, the heat-affected zone is considered as being 50 mm from the weld (see also the Note in F.3.4.3).

b For metals, $\tau = 0,58\times\sigma$.

c Bearing stress depends on material type (Ref [8] gives σ_{ub}/σ_{uc} = 2,8 for Glass CSM and 0,91 for roving), metal regulation usually gives 2,4 to 3 for bolts (but with restrictions: far from edges, min. bolt spacing, min. thickness/bolt d). Values derived from tests are recommended.

d The factor gives 0,75 for ε_R ≥ 7%, and 0,375 for ε_R =1% and linear interpolation in between. Values of ε_R are given in Table B.2.

Table 3 — Value of k_{LC} stress factor according to load case

Load case	Keels and appendages — Load case description	Subclause	Value of k_{LC}
1	Keel bolt[a]	7.2	0,67
	Other elements of fixed keel — metal	—	0,8
	Other elements of fixed keel — FRP[b]	—	0,9
2	Canting keel — metal	7.3	0,8
	Canting keel — FRP	—	0,9
3	Keel vertical pounding	7.4	1
4	Keelboat longitudinal impact	7.5	1
5	Dinghy capsize recovery (strength of centre/dagger board)	7.6	1,34
6	Centre/dagger board upwind	7.7	1,0

a Load case 1 treats bolts differently from other structural materials components. The design stress of bolts is lower than that of other structural components so as to recognize stress concentration effects in bolts and accord with long-standing design practice.

b The requirements of this part of ISO 12215 are strength-criteria based. In some cases, such as keel fins constructed of lower modulus materials, the need to limit deflections and/or increase natural frequencies may require a substantial increase in scantlings above those requirements. Such cases are outside the scope of this part of ISO 12215.

Copyright International Organization for Standardization
© ISO 2012 – All rights reserved

6 Structural components to be assessed

CAUTION — Keel loss has been found on several occasions to be attributable to insufficient thickness of bottom plating in respect of the keel, in particularly, connecting bolts or inadequate load paths between connecting bolts and the corresponding structure, including bolts located too far from the relevant stiffener. It is strongly recommended that the provisions of D.5 and Table D.2 be followed and, in particular, for bolts located too far from a stiffener, those of Table D.2, item 3.

The following shall be considered when assessing or designing the structure covered by this part of ISO 12215.

— Keel-to-hull connection (bolts, wedge connection, stub keel, etc.) — see Figures 1, C.3, C.4 and D.1.

— Bottom shell plating in respect of the keel bolts and transition arrangements beyond the keel bolt zone into the hull structure: in the case of bolted keels on a hull bottom of sandwich construction, the general practice outlined in Annex D is to have a single skin construction for keel and bolts. If this is not the case, the structural arrangement shall ensure that all loads — keel compression loads, bolt preload, etc. — are safely transferred, using proper core material, inserts, etc. The risk of water permeating the sandwich core via the bolt holes shall be seriously considered.

— Backing plates/washers, where relevant.

— Floors, girders and associated supporting structure.

— Keel boxes.

— Fins, foils, centreboards, dagger boards.

Wherever possible, assessment should be conducted by numerical methods in accordance with Clause 8. Alternatively the “established practice” methods given Clause 9 shall be used.

Where calculation procedures do not exist, assessment should be conducted by a combination of semi-empirical methods and the established practice given in Clause 9.

7 Load cases

7.1 General

7.1.1 Status of design load cases

CAUTION — For load cases 1 and 2 (see references in the list below) **— where keels have a large rake angle, the centre of gravity (CG) of the bulb/fin can be located a significant distance aft or forward of the fin or bolt group longitudinal centre at the root. This will induce a torsional moment in addition to bending about the fore and aft axis, equal to the weight of the fin/bulb multiplied by the horizontal distance between the fin/bulb longitudinal centre of gravity (LCG) and root/bolt group LCG. In such cases, it will be necessary to combine direct stresses owing to bending with shear stresses due to the torque. The resulting von Mises equivalent stress shall not exceed the design stress given in Equation (1).** See also 7.8.1.

The design stress shall be assessed for each load case using Equation (1), together with the design stress coefficients given in Tables 2 and 3, as follows:

— 7.2 defines the *fixed keel 90° knockdown* load case 1 and corresponding force, F_1, and design bending moment, M_1, at 90° heel, for the keel at its root/bolt level and floor neutral axis, respectively; it shall be used for fixed keels, either vertical or angled as in the case of twin keel craft, and axially lifting/swing ballast keels;

Copyright International Organization for Standardization
© ISO 2012 – All rights reserved

— 7.3 defines *canted keel* load case 2 and the corresponding force, F_2, and design bending moment, M_2, at 30° steady heel plus a dynamic overload factor; it shall only be used for canting keels;

— 7.4 defines *vertical pounding* load case 3 and design vertical force, F_3;

— 7.5 defines *longitudinal impact* load case 4 and design horizontal force, F_4, considering a longitudinal impact with a fixed or floating object or animal;

— 7.6 defines *dinghy capsize recovery* load case 5 and the design vertical force, F_5, in 90° knockdown, applied on the tip of a centreboard for dinghy capsize recovery;

— 7.7 defines *centreboard/dagger board* load case 6 and the transverse horizontal force, F_6, applied to centreboard or dagger board used while sailing upwind;

— 7.8 considers other load cases, particularly where specific designs bring combined stresses.

NOTE On ballast keels, any buoyancy or lifting forces (as the craft is considered to have stopped) which have been exerted have been neglected for simplification, making all calculations slightly conservative.

7.1.2 Limitation of load cases

This part of ISO 12215 is based on the presumption that load magnitudes are set at such a high level of severity that the number of expected occurrences during the lifetime of the craft will be low. Hence, all load cases are considered to be “static” in the sense that they are used in conjunction with static design stresses according to Tables 2 and 3.

This presumes a certain relationship between static strength and fatigue strength, which is generally preserved for unwelded metals of modest static strength and low stress concentration effects. However, for welded structures and poor detail design/fabrication, compliance with the “static” load cases cannot guarantee that fatigue failure will not occur. In such cases, an explicit fatigue life assessment or inspection regime shall be considered. See Annex F.

In addition, the load cases consider that, for bolted connections, the methods for assessing keel bolts are based on the presumption of a broadly uniform distribution of diameter and spacing along the fin root or keel flange (see D.4 for details).

7.2 Load case 1 — Fixed keel at 90° knockdown

This case corresponds to a 90° knockdown case (heeled at 90°) (see Figure 1), which is usually the most severe transverse bending load for fixed ballast keels:

$$F_1 = m_{\mathrm{KEEL}} \times g \tag{2}$$

expressed in newtons (N) as the vertical force, at 90° knockdown, exerted by gravity at the keel CG

$$M_{1.1} = F_1 \times a \tag{3}$$

expressed in newton metres (N·m) as the keel heeling design moment at the keel junction

$$M_{1.2} = F_1 \times (a + c) \tag{4}$$

expressed in newton metres (N·m), keel heeling moment at floor mid height

where

a is the distance, in metres (m), along the keel centreline, from the keel CG to the keel's junction with the hull or tuck;

Copyright International Organization for Standardization
© ISO 2012 – All rights reserved

c is the distance, in metres (m), along the keel centreline from the keel junction to the floor at mid-height;

g is the acceleration of gravity, taken as 9,81 m/s^2 and used throughout this part of ISO 12215.

For craft fitted with a fin and tuck [see Figure 1 b)], it may be necessary to consider a range of values of c to establish the most highly stressed point.

Annex C gives information on how to calculate the shear force and bending moment on each floor when these are analysed as independent beams.

NOTE For single fixed keels, when considered parallel to the centreline these bending moments correspond to a heel angle of 90°knock-down. For fixed twin keels [see Figure 1 c)], the cosine of angle ϕ from the horizontal when the craft is knocked down is not considered, as the keels will be parallel to the waterline at some point before or after the craft reaches 90° of heel.

7.3 Load case 2 — Canted keel steady load at 30° heel with dynamic overload factor

7.3.1 General

This case only applies to canting keels [see Figure 1 d)]. It corresponds to a steady heel at 30° that can be experienced as a long-term load in upwind passages, with an additional dynamic overload factor which represents the additional fluctuating load experienced as the craft progresses in an adverse seaway.

Load case 2 represents the normal upwind sailing condition for a craft with canted keel, but is augmented by a 40 % dynamic overload factor[1)] to allow for unusual combinations of rigid body motions and accelerations, and is thereby considered to constitute an infrequently occurring case, i.e. fatigue is not expected to be an issue required to be considered, except for welded metals relevant to 7.1.2:

$$F_2 = 1{,}4 \times m_{\mathrm{KEEL}} \times g \tag{5}$$

expressed in newtons (N) as the vertical force exerted by gravity at the keel CG

$$M_{2.1} = F_2 \times a \times \sin\left(30° + \theta\right) \tag{6}$$

expressed in newton metres (N·m) as the canting keel design heeling moment at the keel junction

where θ is the maximum canting angle from axial (vertical) plane, and shall not be taken as greater than 60° or less than 30°.

NOTE 1 The lower limit of 30° ensures a load at least 22 % greater than load case 1.

NOTE 2 Very thin fins of canting keel, especially those of FRP construction, may need a “flutter” (vibration) analysis, but this is considered outside the scope of this part of ISO 12215 (see 7.1.2).

For calculation of floors, the keel design heeling moment of supporting structure floors is

$$M_{2.2} = F_2 \times \left[a \times \sin\left(30° + \theta\right) + 0{,}5\,c\right] \tag{7}$$

expressed in newtons (N) as the design bending moment of canting keel floors.

Annex C gives information on how to calculate the shear force and bending moment on each of the two “wet-box” bulkheads when these can be analysed as independent beams.

---

1) The dynamic overload factor for normal sailing conditions is in the order of 15–20 %.

Copyright International Organization for Standardization
© ISO 2012 – All rights reserved

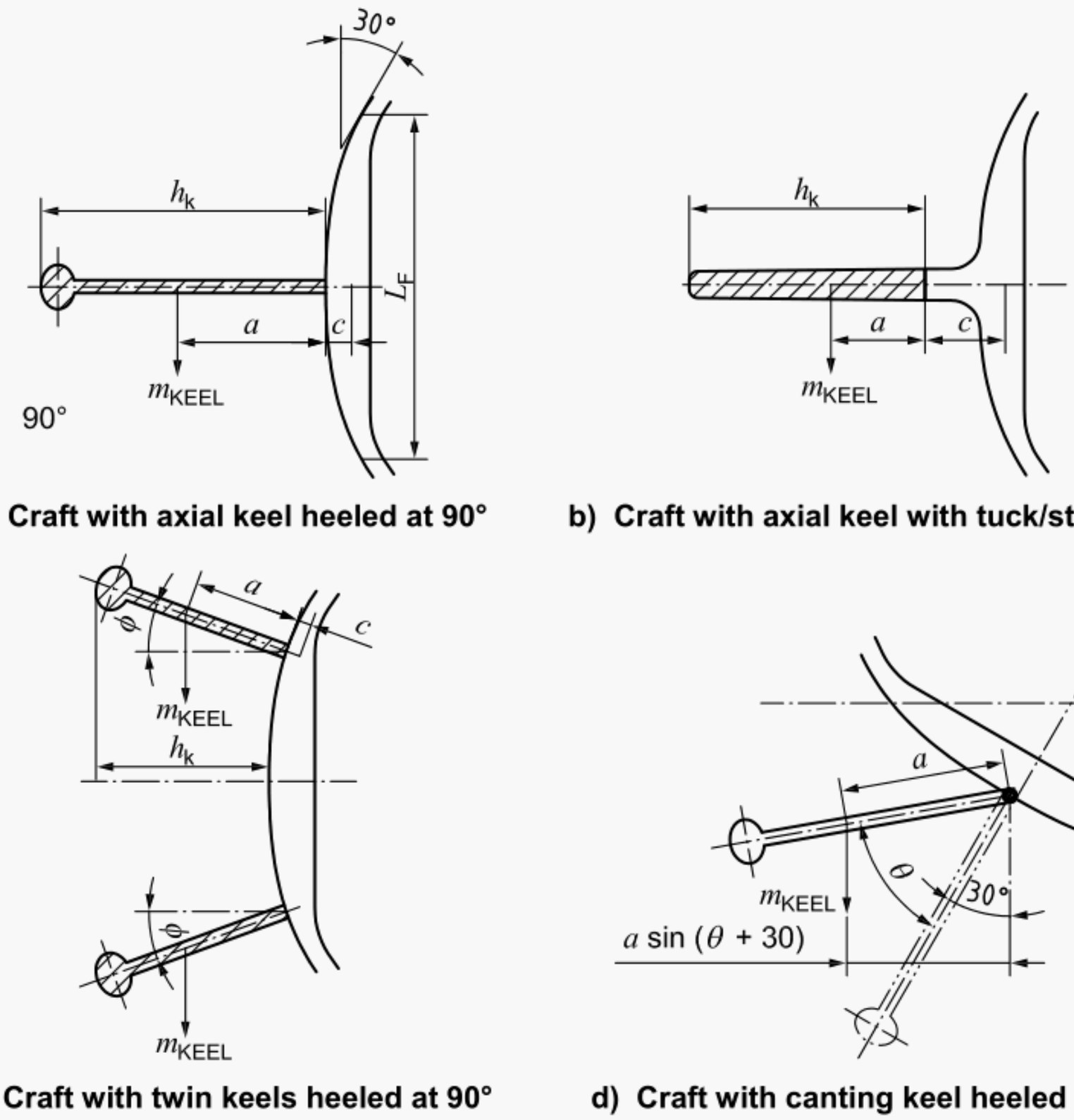

a) Craft with axial keel heeled at 90°

b) Craft with axial keel with tuck/stub keel

c) Craft with twin keels heeled at 90°

d) Craft with canting keel heeled at 30°

Figure 1 — Sketch of fixed axial keel, twin keels and laterally canting keel

7.3.2 Specific requirements for canting keel structure

The canting keel system shall be fitted with a box that is watertight at least up to $0{,}01L_{WL}$ above the deepest load waterline, in order to ensure water tightness in case of leakage or loss of keel. This water tightness may be achieved by flexible elements, e.g. bellows.

Structural elements shall be provided to support the efforts from the canting keel head, in case of leakage or a defect in the orientation rams or system, and to protect the surrounding structure, e.g. stops, locking pin, etc.

7.4 Load case 3 — Keelboat vertical pounding

This case considers a vertical impact load in relation to the events of dry-docking or purely vertical and upwards grounding:

$$F_3 = g\left(m_{LDC} - m_{KEEL}\right) \tag{8}$$

expressed in newtons (N) as the vertical pounding force exerted at keel bottom with the craft upright.

The bending moment is not specifically given here as it depends of the floor and keel arrangement (number, length, stiffness, end fixity, etc.). Annex C gives information on how to calculate the shear force and bending moment on each floor when these may be analysed as independent beams.

Copyright International Organization for Standardization
© ISO 2012 – All rights reserved

The craft structure, keel connection and stiffeners shall be able to withstand a vertical force, F_3, exerted at the ballast keel bottom, passing through the keel CG, without exceeding the grounding design stresses defined in Clause 5.

For twin or multiple keels, 100 % of F_3 is considered to be applied on the bottom of each keel and its structure and attachment, as the grounding could happen on one keel. This will induce a bending moment for canted-out bilge keels that shall be taken into account (see 7.8.2).

Adjustable canting keels are considered in the “neutral” (cant angle of zero) position.

For lifting keels, this requirement applies to the worst case of deployed or retracted condition.

In the deployed condition, the lifting/deploying device shall

— either be able to support load F_3 without surpassing the design stress, or

— retract without damaging the actuating system until the retracted condition is attained.

7.5 Load case 4 — Keelboat longitudinal impact

7.5.1 Preliminary

The value of the force impact load F_4 has been defined by “reverse engineering” of previous satisfactory craft.

7.5.2 Value of longitudinal impact force and bending moment

The craft structure and keel connection shall be able to withstand, without exceeding design stresses, a longitudinal and horizontal force, F_4, exerted at the bottom of the leading edge of the keel and which does not need to be taken lower than $0{,}2L_{\mathrm{WL}}$ below the loaded waterline.

CAUTION — The moments given in the following equations are not the bending moments in the various floors; see Annex C.

$$F_4 = 1{,}2 \times g \times \left(m_{\mathrm{LDC}} - m_{\mathrm{KEEL}}\right) \tag{9}$$

expressed in newtons (N) as the longitudinal and horizontal impact force

$$M_{4.1} = F_4 \times h_{\mathrm{F4}} \tag{10}$$

expressed in newton metres (N·m) as the longitudinal bending moment at keel connection level

$$M_{4.2} = F_4 \times \left(h_{\mathrm{F4}} + c_{\mathrm{a}}\right) \tag{11}$$

expressed in newton metres (N·m) as the longitudinal bending moment at floor mid-height

where

$h_{\mathrm{F4}} = \min\left(h_{\mathrm{k}};0{,}2L_{\mathrm{WL}}\right)$, expressed in metres (m), is the lesser of

— the height of the keel, h_{k}, measured parallel to the axial plane of the craft, between its bottom and its connection to the hull or skeg (see Figure 1), and

— $0{,}2L_{\mathrm{WL}}$, measured from the loaded waterline;

c_{a} is the average vertical distance, in metres (m), of the c values from the keel junction to mid-height of the loaded floor.

Copyright International Organization for Standardization
© ISO 2012 – All rights reserved

For canting keels, h_k is measured with the keel oriented so as to have the maximal draft, with the craft upright.

For twin or multiple keels, F_4 is considered to be applied on each keel at the level of h_{F4}, as defined above, because the impact can be on only one keel when heeled.

For lifting keels, h_k is measured with the keel fully deployed. The device shall resist F_4 in the worst case of deployed or retracted condition.

In the deployed condition, the lifting/deploying device shall either

— be able to support F_4 without surpassing the design stress, or

— retract without damaging the actuating system until the retracted condition is attained.

The centreboards and lifting keels that are not required by ISO 12217 to be locked in the deployed condition need not be considered for the application of F_4.

NOTE For tilting centreboards, the lifting rope or ram usually acts as a breaking-pin. For dagger boards, the well or a crash box acts as the device supporting F_4, but this is generally difficult to calculate.

7.6 Load case 5 — Centreboard on capsize recoverable dinghies

On capsize recoverable sailing craft, as defined in ISO 12217, and where the capsize recovery method, according to that International Standard, uses the centreboard as a lever, this centreboard shall be assessed using the more demanding of either F_5, calculated using Equation (12), or F_6 as defined in 7.7:

$$F_5 = 80 \times 9{,}81 \times n_{PR} \tag{12}$$

expressed in newtons (N) as the vertical force at the tip of the deployed centreboard on a knocked-down dinghy

where n_{PR} is the minimal required number of persons for recovering from capsize according to ISO 12217.

NOTE This requirement represents the case where the crew weight is pushed down on the tip of the centreboard to right the craft. The mass of 80 kg corresponds to a wet “sportsman”.

In either case, the greatest bending stress generally occurs at the point where the centreboard enters the hull. The centreboard shall be taken as fully deployed.

7.7 Load case 6 — Centreboard or dagger board upwind

7.7.1 Non-ballasted centreboards

The design force, F_6, exerted at the centre of surface of the outside area of a non-ballasted, fully deployed centreboard shall be the greater of

$$F_{6.1} = 136 \times (0{,}075\,\alpha) \times A_{CB} \times V^2 \tag{13}$$

expressed in newtons (N) as the design force from lift at angle of attack, α, or

$$F_{6.2} = e\frac{M_{RUP}}{h_{CE}} \tag{14}$$

expressed in newtons (N) as the design force balancing the force on sails when sailing upwind

Copyright International Organization for Standardization © ISO 2012 – All rights reserved

where

α is the design angle, in degrees, of attack of the foil, which shall not be taken as less than 5°;

A_{CB} is the centreboard foil area average (chord × span outside of hull), in square metres (m^2), in the fully deployed condition, where relevant;

V is the maximum speed of the craft, in knots, in the minimum operation condition, m_{MOC} (see ISO 12217), and where, if this speed is not known, it may be taken as

$$V = 2{,}5 \times L_{WL}^{0{,}5} \times \left(\frac{k_{LD}}{6{,}15}\right)$$

where

$$k_{LD} = \frac{L_{WL}}{\left(\frac{m_{LDC}}{1025}\right)^{0{,}33}}$$

but shall not be taken as less than 6,15;

e is the proportion of the total side force carried by the centreboard or dagger board, depending on the contribution from the keel, rudder and canoe body for balancing the force from sails, and which, in the absence of better data, may be taken as 0,6;

M_{RUP} expressed in newton metres (N·m), is the righting moment when the craft beats upwind, which shall be taken as the moment at 30° heel, unless otherwise documented;

h_{CE} expressed in metres (m), is the height of the centre of the area of the nominal sail area, A_S, above the waterline when the craft is upright, as used in F_{KR} of STIX (stability index) according to ISO 12217-2.

F_6 is considered to be exerted at the centre of surface of the part of the centreboard outside of hull (typically 0,5× span), the corresponding bending moment being calculated through multiplying F_6 by the distance between its point of application and the point at which the centreboard exits from the hull (also typically 0,5× span).

The coefficient, 0,075, given in Equation (13) is valid for centreboards with a symmetrical profile but may not be valid for non-symmetrical profiles, which usually achieve greater force.

If the centreboard is not designed to support the forces defined by Equations (13) and (14) at maximum speed V, as defined above, information shall be included in the owner's manual recommending a speed in accordance with centreboard deployment.

7.7.2 Ballasted centreboards

Ballasted centreboards shall also be analysed according to all the relevant load cases specified in Clause 7, with the more demanding requirement being applied.

7.8 Other load cases

7.8.1 General

This part of ISO 12215 should not be regarded as a complete structural design procedure. Load cases 1 to 6 are intended to correspond to those loads which normally govern keel attachment scantlings for most conventional keel configurations. Consequently, it may not be taken that compliance with this part of

Copyright International Organization for Standardization
© ISO 2012 – All rights reserved

ISO 12215 will ensure a satisfactory design in all cases, or that such compliance will absolve the designer or builder of their design responsibilities.

The following sets out general guidance for areas where the designer may wish to exercise judgement beyond the scope of this part of ISO 12215 and offers simple methods for checking the validity of the annexes.

7.8.2 Combined bending and torsion (knockdown case)

For load cases 1 and 2, with large keel rake angle and/or bulb centroid well aft (or, less usually, forward), the CG of the bulb/fin may be located a significant distance aft or forward of the fin or bolt group longitudinal centre at the root. See CAUTION in 7.1.1.

The presence of torque significantly complicates the simplified independent beam approach used to assess floor strength in Annex C (for example, see Table C.1). For users using 3D structural analysis methods, it is recommended that the keel be modelled as a stiff member/framework and the ballast force applied at its correct vertical and fore and aft locations. This is considered to be good practice as point loads should generally be applied well away from the area of interest in finite element analysis (FEA). See 8.2.3.

The effect of a torque on the bolt stress can be easily determined assuming the reference axis is:

— for the torque, T, a vertical line passing through the CG of bolt group areas (see Key item 1 in Figure 2);

— for the bending moment, M, a horizontal line defined by the hinge bearing axis (see Key item 2 in Figure 2 and Key item 1 in Figure D.1), and using equations of the form:

$$\sigma_{\text{max}} = \frac{M \times y_{i\text{max}}}{\sum_{1}^{n} a_i \times y_i^{\,2}} \tag{15}$$

$$\tau_{\text{max}} = \frac{T \times r_{i\text{max}}}{\sum_{1}^{n} a_i \times r_i^{\,2}} \tag{16}$$

Figure 2 indicates a relationship between the applied torque and bending moment ($M_{1.1}$) for a set of n = 10 bolts (identical area a_i) set up in a uniform “keel-flange” style arrangement.

Copyright International Organization for Standardization
© ISO 2012 – All rights reserved

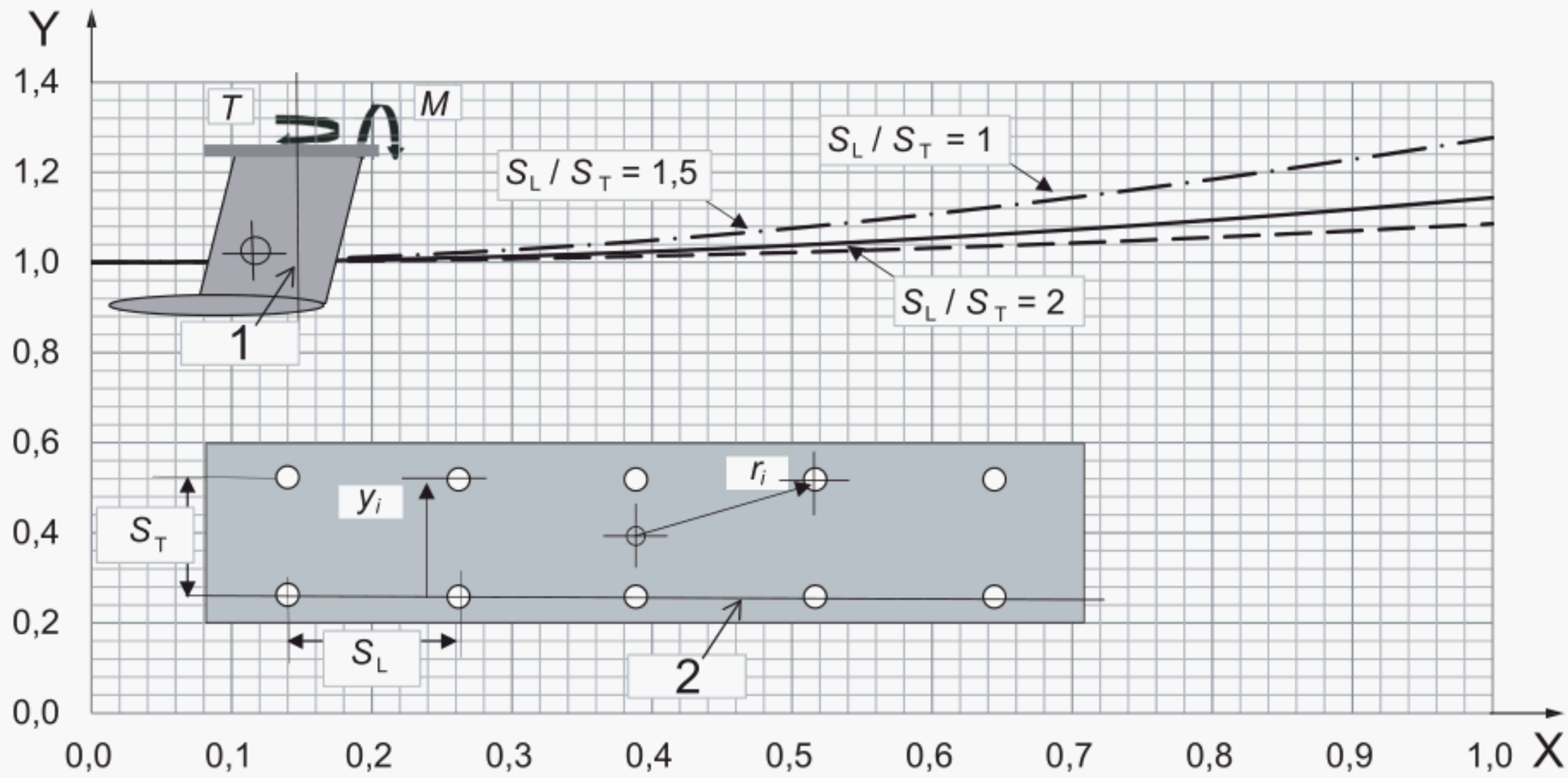

Key

1 torque reference axis (bolt group centroid)

2 bending moment reference axis

X torque transverse bending moment

Y von Mises Stress/stress due to bending moment alone

Figure 2 — Effect of torque on bolt stress under load case 1

It can be seen that the torque increases the von Mises equivalent stress by a factor of, typically (10–20) % for moderate fore and aft offset. The force is the same as for case 1, i.e. $m_{\text{KEEL}} \times g$, so that the ratio torque/transverse bending moment is equal to the fore and aft torque offset from the bolt group centroid divided by a, as defined in 7.2). This increase is a function of the ratio S_L/S_T, the longitudinal and transverse spacing of bolts, respectively.

This implies that in cases of moderate torque/moment ratio, the effect may be allowed for by ensuring that the bolt stress compliance factor is not less than about 1,2 when $M_{1.1}$ is acting alone.

It should be noted that the structure in way of keel bolts (see Annex D) only considers a vertical force and the additional transverse bearing force induced by a torque is neglected. This should be borne in mind in cases of minimum compliance with the requirements of Annex D.

7.8.3 Combined bending moment and vertical load (load case 3)

Load case 3 assumes that the craft impacts such that the vertical force passes through its centreline. This induces no bending moment at the keel root and the equations in Table C.1 will be valid. However, it is possible that the craft could be “dropped” onto a seabed/hard standing at an angle, β. This would induce a moment of $m_{\text{LDC}} \times S_{\text{KEEL}} \times \sin\beta$ (where S_{KEEL} is the keel span). Assuming a (see 7.2) is $0{,}6S_{\text{KEEL}}$ and $m_{\text{KEEL}}/m_{\text{LDC}}$ = 0,5, an angle β greater than about 20° could mean that load case 1 no longer gives the worse transverse bending.

A keel with large wings could also give rise to the same effect at much smaller angles. For users using 3D structural analysis methods, it is recommended that the keel be modelled as a stiff member/framework and that the vertical force (F_3 or m_{LDC}) be applied at its correct vertical and transverse location. It is also possible to combine load cases 1 and 3 (see Table C.1), although this is considered to be of dubious validity as these methods use different floor distribution factors.

Copyright International Organization for Standardization
© ISO 2012 – All rights reserved

As a pragmatic approach, provided the transverse offset (a_V) is less than m_{KEEL}/ m_{LDC} × a (see Figure 3), load case 1 will normally generate the larger transverse moment that will be safe for design/assessment. This neglects the moment due to the vertical force (as per Table C.1) and hence, once again, this pragmatism is undone in cases for designers seeking compliance factors close to unity. A precise definition of a_V is not appropriate here, as this is outside the scope of this part of ISO 12215, but a value of a_V equal to the distance between the centreline of craft to furthest transverse dimension (as in Figure 3) would be a reasonable starting point.

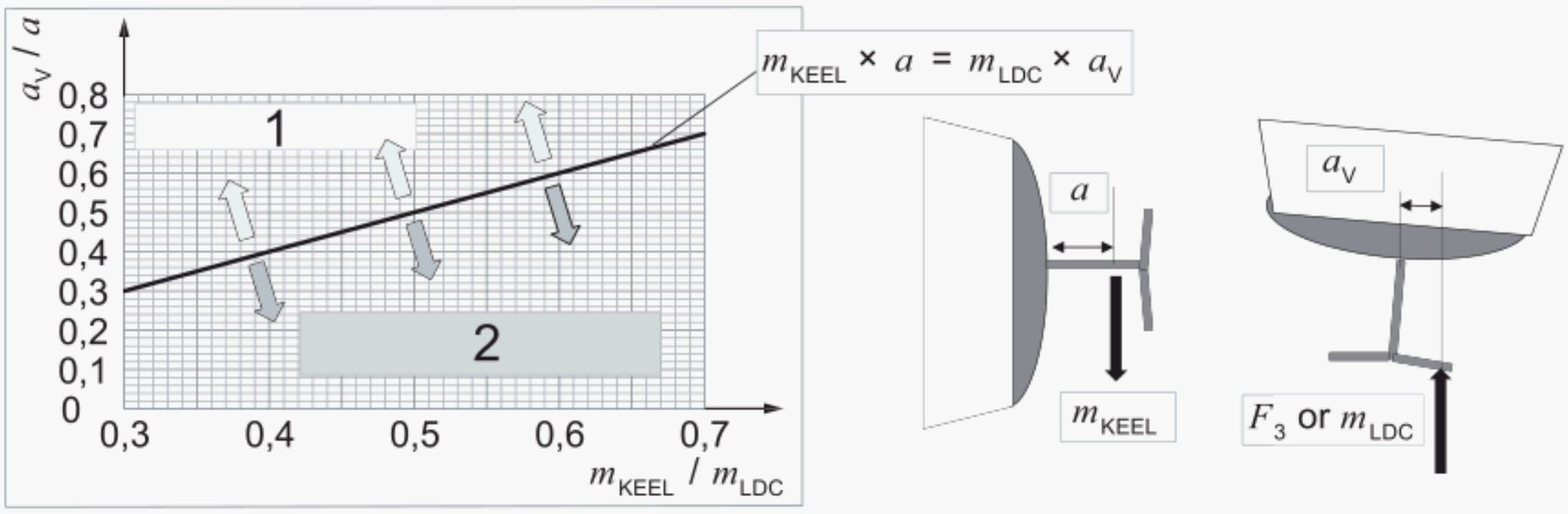

Key

1 area where load case 3 (vertical pounding) governs

2 area where load case 1 governs

Figure 3 — Simplified method for initial assessment of the effect of transverse offset of vertical load

7.8.4 Other combined load cases

As design responsibility is entirely vested in the designer/builder, it is recognized than some users may wish to combine load cases given in this part of ISO 12215 as occurring separately. For example it is entirely possible that a canting keel craft with deployed keel could hit a floating object such that load cases 2 and 4 could be simultaneous. Such cases are outside the scope of this part of ISO 12215, since it may not be reasonable to expect such combined load cases to be used with the allowable stresses given in Clause 5.

8 Computational methods

8.1 General

This part of ISO 12215 recognizes that many structural components within its scope are best analysed using 3D numerical procedures (e.g. box keels, girder and floor grillage frames). In order not to stifle innovation, it has been written in terms of defined load cases and associated stress factors/factors of safety. The stress assessment is left to the discretion of the designer, subject to the criteria given in 8.2.

However, in order to assist designers of conventional keel structures, Annexes B to F contain a series of simplified strength assessment methods which are considered to be “established practices” and which have been found suitable for a limited range of conventional keel configurations.

8.2 General guidance for assessment by 3D numerical procedures

IMPORTANT — It is considered prudent design practice to compare scantlings derived from this subclause with those derived from 8.3. A technical explanation shall be provided in cases where these 3D numerical procedures give significantly lower scantlings than the assessment specified in 8.3.

Copyright International Organization for Standardization
© ISO 2012 – All rights reserved

8.2.1 3D numerical procedures

The term “3D numerical procedures” is intended to indicate any structural assessment method that is not limited to simple geometries. In most cases, the term will correspond to finite element analysis.

8.2.2 Material properties

Irrespective of the numerical method, the mechanical properties of any material shall be taken as stated in Clause 5.

8.2.3 Boundary assumptions

No explicit boundary assumptions are specified within this part of ISO 12215. The analyst shall ensure that the critical area to be analysed is located well away from the model boundaries.

8.2.4 Load application

Wherever possible, loads should be applied as distributed loads. Where forces or moments are applied as concentrated nodal loads, these shall be located well away from the critical area to be analysed.

8.2.5 Model idealization

Models may be of beam-element, plate or brick type. Where beam elements are adopted, effective plate dimensions may be obtained from ISO 12215-5 or from published effective breadth equations. Closed sections having significant torsional stiffness should have this parameter calculated using accepted methods, e.g. Bredt–Batho theory.

When using plate-based models, sufficient elements shall be used between frames to replicate local bending effects.

Unless a non-linear analysis is used, analysts should ensure that buckling modes of failure are precluded. This can normally be accounted for by respecting the allowable slenderness ratios for beams and flanges as outlined in ISO 12215-5.

Non-linear analysis is required for accurate analysis of bolted structures using contact algorithms.

8.3 Assessment by strength of materials/non-computational-based methods

The methods outlined in Annexes C and D contain a series of standard beam/plate-theory-based methods and other simplified procedures. Many of these derive from established practice and hence have been validated by long-term use. In general, the methods are considered to be conservative. The methods will work well for one- and two-dimensional structures of isotropic material construction.

9 Compliance

Compliance with this part of ISO 12215 may be claimed if the conditions of a) or, alternatively, b) are met.

a) The user shall meet the requirements of Clauses 5 to 7 and Annex A, as well as any of the “established practices” given in Annexes B to F that are relevant. However, where one of Annexes B to F or a part thereof is not used, the user shall justify and explain the choice of the alternative scantling assessment methods that have been used, in accordance with Clause 8, to meet these requirements.

b) The user shall meet the requirements of Clauses 5 to 7, Annex A *and* Annexes B to F (“established practice”), *in their entirety*, in which case no further justification or explanation is required, provided the annexes have been fully complied with.

Copyright International Organization for Standardization
© ISO 2012 – All rights reserved

If a) is met, the use of Annexes B to F is not fully required for compliance with this part of ISO 12215. However, if alternative b) is chosen, those annexes become proof of compliance.

— Annex A, an application declaration by the user of how this part of ISO 12215 has been used, is normative, and needs to be completed for compliance in the case of either a) or b);

— Annex B shall be used for metals and connection bolts material choice, and gives “established practice” for bolt tightening and keel welding;

— Annex C gives “established practice” for structural arrangements in respect of ballast keel;

— Annex D gives “established practice” for calculating keel fin strength (fixed or canting) and fixed ballast keel connected by bolts;

— Annex E gives information on the geometric properties of typical appendage shapes (second moment, section modulus, etc.);

— Annex F gives information on simplified fatigue stress assessment.

NOTE 1 The scantling requirements of this part of ISO 12215 are considered as corresponding to the minimum strength requirements for sailing craft operated in a safe and responsible manner, and with due cognisance of the prevailing conditions. No sailing craft can be designed to survive the most extreme load cases, such as very severe grounding, collisions or extreme sea states. In this context, *minimum strength* implies that the craft will be able to cope with heavy seas and moderate impact loads with minimal structural damage. Builders and designers are strongly advised against systematically seeking minimum compliance on all components.

NOTE 2 Scantlings derived from this part of ISO 12215 are primarily intended to apply to recreational craft, including charter vessels.

Copyright International Organization for Standardization

Annex A
(normative)

Application declaration

As the use of Annexes B to F is optional, the following declaration shall be included as part of any scantling report, so that third parties may readily determine the extent to which the user has applied this part of ISO 12215.

Relevant clause/annex of ISO 12215-9:2011		Applied	Notes
5	**Design stresses**	**Yes** [ ] No [ ]	"No" means non-compliance with these clauses and, consequently, ISO 12215-9.
6	**Structural components to be assessed**	**Yes** [ ] No [ ]	
7	**Load cases**	**Yes** [ ] No [ ]	
8	**Computational methods**	Annexes B–F-based [ ]	Enter "**All**" [X]" for B–F below (grey section)
		Alternative methods [ ]	Enter "None [X]" for B–F below (grey section)
		Mix of annexes and alternative methods [ ]	Enter "**All**", "None" or Selected on an annex-by-annex basis (grey section)
9	**Compliance**	**Yes** [ ] No [ ]	"No" means non-compliance with ISO 12215-9.
B	**Information on metals for appendages and fasteners and *established practice* for fastening and welding**	Clauses used: **All** [ ] None [ ] Selected [ ]	If "**All** [X]", no further details need be supplied. If "None" [X]", supply full description of alternative methods, including background and validation. If "Selected [X]", supply full description of alternative methods, including background and validation for those areas NOT covered by the Annexes B–F clauses used. NOTE In this context, "supply" means technical documentation appropriate to the application of the standard, e.g. notified body or plan review submission.
C	***Established practice* structural arrangement for ballast keel**	Clauses used: **All** [ ] None [ ] Selected [ ]	
D	***Established practice* calculation of keel fin strength (fixed or canting) and fixed ballast keel connected by bolts**	Clauses used: **All** [ ] None [ ] Selected [ ]	
E	**Geometrical properties of some typical appendage foil shapes**	Clauses used: **All** [ ] None [ ] Selected [ ]	
F	**Simplified fatigue strength assessment**	Clauses used: **All** [ ] None [ ] Selected [ ]	If "None [X]", give technical justification for lack of explicit fatigue strength check.

Copyright International Organization for Standardization
© ISO 2012 – All rights reserved

Annex B
(informative)

Information on metal for appendages and fasteners and "established practice" for fastening and welding

B.1 Typical metal properties

B.1.1 General

Except for precipitation-hardened stainless steel, the values of Tables B.1 and B.2 shall only be used for the cited state as default values, unless derived from tests and/or from guaranteed values supplied by the metal manufacturer or supplier.

Where given by the manufacturer/supplier or derived from tests, the values of σ_u and σ_y used in Table 2 and the rest of this part of ISO 12215 shall be either 90 % of the mean relevant tested value or the mean value minus two standard deviations, whichever is the lesser. The material properties from manufacturer's/supplier's values shall only be those given by the manufacturer or supplier for the batch of actual material. This is particularly applicable for PH stainless steel and metals not listed in Tables B.1 to B.3.

As the yield stress and ultimate strength can vary greatly for machined components, this being particularly the case for AISI 304 or AISI 316[2)], it is wise to make tests to determine the properties for such components.

The equivalences between several standard denominations for stainless steel is given in Table B.3.

IMPORTANT —The mechanical properties of commercially available fasteners (SS or steel) shall not be taken from Table B.1, but from Tables B.4 and B.5.

B.1.2 High-strength alloyed steels

High-strength alloyed steels are generally classed by EN 10025-6. However, not all the steels classed in that European Standard are recommended for welding.

The trade name Weldox is classed in EN 10025-6, but these steels are specially designed to be welded, with good mechanical properties in the HAZ. This company advocates that for Weldox with a yield strength ≤960 N/mm^2, and with the proper welding procedure and correct filler, the welded properties are close to the unwelded ones, at least under static loading. For higher grades this is not the case[3)].

In any case, the static strength of welded joint is best evaluated by the more recent EN/TS 13001-3, which deals with static strength of welded joints on cranes.

For fatigue strength of welded joints, IIW[4)] publications such as IIW doc. XIII-1965-03/XV-1127-03, or equivalent, may be used in addition to, or replacement of, Annex F.

---

2) American Iron and Steel Institute (AISI) steel grades.

3) This information is given for the convenience of users of this document and does not constitute an endorsement by ISO of these products.

4) International Institute of Welding.

Copyright International Organization for Standardization

Table B.1 — Values of σ_{LIM}, τ_{LIM}, σ_{LIMb}, σ_{LIMw} for typical metals

Material denomination	Chemical composition	σ_u[a]	σ_y[a]	σ_{uw} Welded	σ_{yw} Welded	σ_{LIM}[a]	σ_{LIM}[b] HAZ	τ_{LIM}[a]	σ_{LIMb} Bearing	ε_R App. %
		N/mm²								
Stainless steels										
AISI 304	X5 Cr Ni 18.9	500	195	500	195	195	195	113	351	45
AISI 316, 316 L	X5 Cr Ni Mo 17.2.2	500	195	500	195	195	195	113	351	40
AISI 329 not cold worked	X3Cr Ni Mo N 27-5-2	650	500	650	500	325	325	189	585	15
AISI F51, DX45, 2205,Uranus[c]	X2 Cr Ni No N 22.5.3	620	450	620	450	310	310	180	558	40
Mild steel										
E24/A		400	235	400	235	200	200	116	360	15–26
E32 - AH 32		470	315	470	315	235	235	136	423	14–24
E36 - AH 36		490	355	490	355	245	245	142	441	12–22
Alloyed steels										
EN 10025-6 S 690, Weldox 700	C 0,2 Si 0,6 Mn 1,6	930	700	830[c]	560[c]	465	415	270	837	14
EN 10025-6 S 890, Weldox 900	C 0,2 Si 0,5 Mn 1,6	1100	900	990[c]	810[c]	550	495	319	990	12
EN 10025-6 S 960, Weldox 960	C 0,2 Si 0,6 Mn 1,6	1150	960	1035[c]	864[c]	575	518	334	1035	12–16
Weldox 1100	C 0,2 Si 0,6 Mn 1,9	1550	1100	1290[c]	990[c]	775	645	450	1395	8–10
Aluminium alloys series 5000										
5086 0/H111	Al,Mg,4	240	100	240	100	100	100	58	180	16
5086 H32	Al,Mg,5	275	185	240	100	138	100	80	248	10
5083 0/ H111	Al,Mg,4,5 Mn 07	275	125	270	125	125	125	73	225	15
5083 H32	Al,Mg,4,5 Mn 07	305	215	270	125	153	125	88	275	9
5059 Alustar 0/H111	Al, Mg, 5-6	330	160	300	160	160	150	93	288	24
5059 Alustar H32	Al, Mg, 5-6	370	270	300	160	185	150	107	333	10
Aluminium alloys series 6000										
6005 A T6	Al, Si ,Mg (A)	260	215	165	115	130	83	75	234	8
6061 T6	Al, Mg1,Si,Cu	260	240	165	115	130	83	75	234	10
6082 T6	Al, Mg1,Si,Mn	310	260	170	115	155	85	90	279	10
Titanium alloys										
UTA 6V		900	820			450		261	810	10
Copper alloys										
Bronze-Manganese		510	245			245		142	441	>7
Bronze-Ni-Al		740	390			370		215	666	>7
Monel 400		550	350			275		160	495	>7
Monel 500		960	690			480		278	864	>7
Lead-antimony alloys										
Pure lead		18				9		5	16	>7
Lead with 1% antimony		20				10		6	18	>7
Lead 96 % with 4 % antimony (hard lead)		80				40		23	72	>7
For metals with ε_R >7%: $\sigma_{LIM} = \min.(0{,}5\sigma_u;\sigma_y)$ $\tau_d = 0{,}58\sigma_{LIM}$ $\sigma_{LIMb} = 1{,}8\ \sigma_d$.										

[a] Properties in the unwelded state.

[b] Properties in the HAZ of the welded state.

[c] To be welded in a neutral atmosphere (argon).

Copyright International Organization for Standardization
© ISO 2012 – All rights reserved

Table B.2 — Values of σ_{LIM}, τ_{LIM}, σ_{LIMb}, σ_{LIMw} for cast iron

Material		σ_u	σ_y	ε_R	K_{MAT}[a]	σ_{LIM}[b]	τ_{LIM}[b]	σ_{LIMb}	K_{LC}	σ_d
EN denomination	**ASTM denomination**	N/mm²	N/mm²	**Break** %	*	N/mm²	N/mm²	**Bearing** N/mm²	**Load case 1 keel**	
Cast iron with lamellar graphite										
EN-GJL -150	—	150	100	1	0,375	75	44	135	0,8	22,5
EN-GJL -200	—	200	130	1	0,375	100	58	180	0,8	30,0
Cast iron with spheroidal graphite										
EN-GJS-350-22	A 536 60-40-18	350	220	22	0,750	175	102	315	0,8	105
EN-GJS-400-18	A 536 60-40-18	400	240	18	0,750	200	116	360	0,8	120
EN-GJS-450-15	A 536 65-45-12	450	310	15	0,750	225	131	405	0,8	135
EN-GJS-500-7	A536 80-55-06	500	320	7	0,750	250	145	450	0,8	150
EN-GJS-600-3	ASTM 100-70-03	600	370	3	0,500	300	174	540	0,8	120

a K_{MAT} = min.(0,0625 ε_R + 0,3125;0,75), where ε_R is the elongation at break in percent.

b σ_{LIM} = min.(0,5σ_u;σ_y) τ_d=0,58 σ_{LIM} σ_{db}=1,8 σ_{LIM}

Table B.3 — Equivalence between stainless steel standard denominations

Stainless steel Common name, brand	**Chemical composition**	**AISI**	**EN 10088-3**	**ISO 16143-2**
AISI 304, 304L	Cr Ni 18.9	304 L	1,4307	1
AISI 316, 316 L	Cr Ni Mo17.12.2–17.12.3	316 L	1,4404–1,4432	21–22
AISI 329 not cold worked	Cr Ni Mo N 27-5-2	329	1,4460	55
AISI 329 cold worked	Cr Ni Mo N 27-5-2	329	1,4460	55
17-4 PH, F16 PH	Cr Ni Cu Nb 16.4	630	1,4545	101
AISI F51, DX45, Uranus, 2205	Cr, Ni, Mo N 22, 5, 3	UNS 31803	1,4462	52

NOTE AISI 316 is widely used worldwide, particularly in the USA, and EN 10088-3 is widely used in the European Union, whereas ISO 16143-2, even if more easily understood, is not yet widely used.

B.2 Mechanical properties of typical bolts

B.2.1 General

Bolts may be made from any suitable metal, such as carbon steel, stainless steel, or non-ferrous metals (Monel 400, etc.). Stainless steel or carbon steel bolts are mainly considered in this clause because they are the most popular material.

Screws and threaded rods listed in Tables B.5 and B.6 are generally not machined, but rolled and often cold worked and/or thermally treated. Their mechanical properties are therefore higher than their equivalent made from a machined rod.

When using non-commercial machined threaded rods, screws or studs, because the procedure can induce stress concentrations the user shall have written proof or test results of their mechanical properties as machined. These properties shall be used and not the ones of Tables B.5 or B.6. This is required in particular

Copyright International Organization for Standardization

for precipitation-hardened stainless steel (17-4 PH, F16-PHJ, etc.), as machining requires skill and efficient tooling.

Fastener choice information and suggested tightening torque are given in B.3 and B.4.

B.2.2 Stainless steel fasteners

Stainless steel fasteners are classed by ISO 3506-1 into four main categories, as set out in Table B.4.

Table B.4 — Classification of stainless steel fasteners according to ISO 3506-1

ISO designation	AISI	Texture
A1	303	Austenitic
A2	304	Austenitic
A4	316	Austenitic
C1 to C4	400 serial	Martensitic

If the steel has a low carbon content, the letter L is added after the ISO designation.

Table B.5 — Mechanical properties of stainless steel screws and studs according to ISO 3506-1

Direct stress N/mm^2	Property class according to ISO 3506-1		
	50	70	80
σ_u	500	700	800
σ_y	210	450	600
σ_{LIM}	210	350	400

Class 50 is usually made by machining a thread from a solid rod. This is usually how threaded rods and studs are made.

Class 70 and 80 are made by a combination of stamping and cold stretching, this being the most common method for screws and bolts.

According to ISO 3506-1, the quality and mechanical properties of SS bolts are to be stamped on their head with the identification of the manufacturer with 3 letters, with the ISO material and class quality underneath.

For example, A4L-80 means ISO Material A4 with low carbon and Class 80.

B.2.3 Steel fasteners

Steel (plain or galvanized) bolts are classed by ISO 898-1 into several classes. The first digit multiplied by 100 gives the ultimate strength, σ_u (in N/mm^2). The yield strength, σ_y (in N/mm^2), is obtained by multiplying the first digit by 10 times the second digit. Table B.6 gives the mechanical properties of some typical classes.

Copyright International Organization for Standardization
© ISO 2012 – All rights reserved

Table B.6 — Mechanical properties of steel screws and studs

Direct stress	Property class according to ISO 898-1						
N/mm²	4.8	5.6	5.8	6.8	8.8	10.9	12.9
σ_u	400	500	500	600	800	1 000	1 200
σ_y	320	300	400	480	640	900	1 080
σ_{LIM}	200	250	250	300	400	500	600

B.3 Design stresses of typical fastener metals

Table B.7 shows the design stresses pre-computed from Equation (1) and Tables 2, 3, B.2, B.5 and B.6 for several classes of SS and steel bolts; it also gives the ratio σ_d/σ_y, which may be useful in the application of B.5.3 for bolt preload determination.

Table B.7 — Pre-calculated design stress and ratio σ_d/σ_y for typical keel fastener material

Bolt metal	ISO class	σ_u	σ_y	σ_{LIM}	k_{MAT}	Keel screws in load case 1			Keel screws in load case 4		
						k_{LC}	σ_d	σ_d/σ_y	k_{LC}	σ_d	σ_d/σ_y
SS fasteners	50	500	210	210	0,75	0,67	105,5	0,50	1	157,5	0,75
	70	700	450	350	0,75	0,67	175,9	0,39	1	262,5	0,58
	80	800	600	400	0,75	0,67	201,0	0,34	1	300	0,50
F16 PH SS	—	1 000	720	500	0,75	0,67	251,3	0,35	1	375	0,52
Steel fasteners	6,8	600	480	300	0,75	0,67	150,8	0,31	1	225	0,47
	8,8	800	640	400	0,75	0,67	201,0	0,31	1	300	0,47
	10,9	1 000	900	500	0,75	0,67	251,3	0,28	1	375	0,42
	12,9	1 200	1 080	600	0,75	0,67	301,5	0,28	1	450	0,42

B.4 Bolt material choice

B.4.1 Bolt material resistant to chemical corrosion

Alloys containing zincs shall not be used.

All copper based alloys of Table B.1 may be used.

Stainless steels are protected by their oxide layer, which is true when the surrounding medium is oxidant, and when it is clean, polished and passivated. Where this is not true, stainless steel can corrode or rust, particularly Martensitic stainless steel. Some keel bolts have been corroded in places where oxygen is lacking, which is the case when bilge water is stagnant. It is good practice to seal the bolt heads and nuts using sealant or paint.

Fasteners made of metal quoted A2 (AISI 304) in Table B.4 are not recommended if there is any risk of them being under water.

Fasteners made of metal quoted A4 (AISI 316) in Table B.4 are highly recommended, but might be subject to corrosion in a non-oxidizing medium. Care shall be taken when using them on wooden craft where they will be submerged in de-oxidized water.

Copyright International Organization for Standardization
© ISO 2012 – All rights reserved

Fasteners made of metal quoted C1 to C4 in Table B.4 (Martensitic stainless steels) may have very high mechanical properties, after heat treatment, but are prone to crevice corrosion under tension; they should therefore only be used with the utmost care and where there is very limited risk of corrosion.

B.4.2 Prevention of electrolytic and galvanic corrosion

Electrolytic and galvanic corrosion shall be avoided. The grounding of electric a.c. and d.c. components shall be checked in this respect.

On aluminium craft, non-aluminium fasteners shall be electrically insulated from the rest of the structure — for example, by inserting insulation bushings and washers.

B.5 Bolt screwing and pre-stressing

B.5.1 General

Screws and nuts shall be tightened to ensure pre-stressing, which has three main purposes:

a) to avoid fatigue: keel bolts, like any bolt, can be subject to fatigue loading; put simply, if a bolt is pretensioned to a load greater than the one it will experience in service, it will experience no change in stress, and no fatigue issue;

b) to avoid a gap opening up under load between the different elements (keel, jointing compound, backing plate, etc.);

c) to avoid nuts working loose, although this can be obtained by other means (self-locking nut, resin, counter bolt ,etc.).

The nut shall not, however, be tightened excessively, to avoid too much stress being placed on the hull bottom or other elements.

Washers between the bolt head or nut and backing plate are needed to reduce friction while tightening. When removing nuts for inspection, replacement of the washer is recommended, and replacement of the nut should be considered, as pre-stress generally diminishes each time the nut is re-used. When metals other than steel are used for bolts it is recommended that washers and backing plate made of the same metals (e.g. Nickel aluminium bolts) be used; see also Table D.2.

The pre-stressing is generally achieved by tightening the bolt with a torque wrench (see B.5.5), but this method has its drawbacks. Some other devices — hydraulic pre-tensioning, measuring bolt extension with a micrometer (see B.5.4), ultrasonic equipment, etc. — are considered more efficient, as they avoid the extra shear load on bolts brought up by the tightening torque. Above all, these methods are considered to give a better indication of the level of pre-stress, which is not straightforward with the torque (see B.5.3). However, these devices are usually more expensive than the torque wrench.

B.5.2 Pre-stressing force

The determination of the pre-stressing force depends of several parameters, such as service force, screw and nut material, friction coefficient, lubrication and respective stiffness of the bolt and of all elements compressed, etc. There is a good deal of literature on the subject. The German VDI 2230-1 and French NF E25-030-1 standards have very detailed specifications, both on pre-stressing and tightening torque. However, in most cases the accuracy of the knowledge of all components of a keel bolting system in its environment will hardly be up to the level of large-scale industry practice.

Copyright International Organization for Standardization
© ISO 2012 – All rights reserved

B.5.3 Tightening with a torque wrench

The friction in the screw and under the bolt or nut head often makes up to 90 % of the tightening torque, leaving only 10 % of the torque contributing to the pre-stressing. The determination of the two corresponding friction coefficients (in the screw and under the head) is subject to many uncertainties. That is why the tightening torque *recommended* by the various sources are usually given with many cautions, and testing is strongly advised. This is even truer where the environment and the precision of clearance are variable, which is often the case for a craft's keel fasteners.

As a guide only, Table B.8 shows “rough” guidance values, considering all the above-cited uncertainties and especially the environment of a boat yard; the user shall seek information from the bolt manufacturer. For simplicity, Table B.8 uses the K_{nut} method: the equation $T_o = K_{nut} \times F_{Pr} \times d$, gives the torque T_o expressed in newton metres, from the pre-stress force, F_{Pr}, in kilonewtons, and d in millimetres.

CAUTION — Tables B.8 and B.9 are of course not valid for bolt material outside the strength range, in which case the above formula shall be used to find the preload at 70 % yield and corresponding torque.

The values given in Tables B.8 and B.9 correspond to bolts pre-stressed at 70 % of yield with an intermediate washer between the nut and the backing plate and with values of K_{nut}, respectively, of 0,22 and 0,15 for ungreased/greased and non-lubricated/lubricated bolts. These values are based on tests made with fibreglass laminate in the test fixture. Without washer, the torque K_{nut} would increase by about 40 % to, respectively, 0,31 for ungreased and 0,21 for greased bolts.

For metal craft, the value of K_{nut} with washer should approach the more commonly documented values of, respectively, 0,20 for ungreased and 0,12 for greased bolts.

B.5.1 a) emphasises the fact that pre-stress should be greater than the stress in service. Tables B.7 to B.9 show that under load case 1 — the most common and frequent case — the design stress of typical bolt materials is 28 % to 50 % of yield. Therefore, for avoiding fatigue the pre-stress should be at least these values. The 70 % of yield used in Table B.8 also considers B.5.1 b), gap opening, and c), nut friction. Typical literature recommends tightening between 70 % to 90 % of σ_y.

Table B.8 gives the preload F_{Pr} (kN) and tightening torque T_o (N·m) for bolt diameters in millimetres, and Table B.9 gives these values in imperial dimensions — respectively in klbs (called a *kip* = 1 000 lbs) and ft-lbs, the ft-lbs usually being used for energy. For torque, this is more commonly written as lb-ft, i.e. force first, distance second, as for newton metres, and for bolt diameters in inches.

NOTE Besides the K_{nut} method described above, another popular simplified method uses friction coefficients in the screw and under the nut, and uses the formula $T_o = F_{Pr} \times (0{,}159p + \beta d)/1\,000$. In this formula, the two friction coefficients are aggregated to an intermediate value β. To obtain results similar to the ones in Tables B.8 and B.9, β, should be, respectively, 0,20 and 0,13 for non-lubricated and lubricated states with intermediate friction washer.

Copyright International Organization for Standardization
© ISO 2012 – All rights reserved

Table B.8 — Examples of preload F_{Pr} (kN) and tightening torque T_o (N·m) values for ISO M fasteners valid with a friction washer

Nominal ISO diameter (mm) normal pitch																		
ISO M fastener			M 10		M 12		M 16		M 20		M 24		M 30		M 36			
d	mm		10		12		16		20		24		30		36			
P	mm		1,50		1,75		2,0		2,5		3,0		3,5		4,0			
d_3 **neck**	mm		8,2		9,9		13,5		16,9		20,3		25,7		31,1			
S **neck**	mm^2		52,3		76,2		144,1		225,2		324,3		519,0		759,3			
σ/σ_y =	1		**0,70**		**0,70**		**0,70**		**0,70**		**0,70**		**0,70**		**0,70**			
Stainless steel bolts																		
Method with K_{nut} factor				F_{Pr}	T_o	F_{Pr}	T_o	F_{Pr}	T_o	F_{Pr}	T_o	F_{Pr}	T_o	F_{Pr}	T_o	F_{Pr}	T_o	F_{Pr}	T_o
Material	σ_y	**State**	K_{nut}	kN	N·m	kN	N·m	kN	N·m	kN	N·m	kN	N·m	kN	N·m	kN	N·m	kN	N·m
SS 50	210	Ungreased	0,22	7,7	16,9	11,2	29,6	21,2	75	33,1	146	48	252	76	504	112	884		
SS 50	210	Greased	0,15	7,7	11,5	11,2	20,2	21,2	51	33,1	99	48	172	76	343	112	603		
SS 70	450	Ungreased	0,22	16,5	36,2	24,0	63,4	45,4	160	70,9	312	102	539	163	1 079	239	1 894		
SS 70	450	Greased	0,15	16,5	24,7	24,0	43,2	45,4	109	70,9	213	102	368	163	736	239	1 292		
SS 80	600	Ungreased	0,22	22,0	48,3	32,0	84,5	60,5	213	94,6	416	136	719	218	1 439	319	2 526		
SS 80	600	Greased	0,15	22,0	32,9	32,0	57,6	60,5	145	94,6	284	136	490	218	981	319	1 722		
Allied steel bolts																		
5.8	400	Ungreased	0,22	14,6	32,2	21,3	56,4	40,4	142	63	277	91	479	145	959	213	1 684		
5.8	400	Greased	0,15	14,6	22,0	21,3	38,4	40,4	97	63	189	91	327	145	654	213	1 148		
8.8	640	Ungreased	0,22	23,4	51,5	34,2	90,2	64,6	227	101	444	145	767	233	1 535	340	2 694		
8.8	640	Greased	0,15	23,4	35,1	34,2	61,5	64,6	155	101	303	145	523	233	1 046	340	1 837		
10.9	900	Ungreased	0,22	32,9	72,5	48,0	126,8	90,8	320	142	624	204	1 079	327	2 158	478	3 789		
10.9	900	Greased	0,15	32,9	49,4	48,0	86,5	90,8	218	142	426	204	735	327	1 471	478	2 583		
12.9	1 080	Ungreased	0,22	39,5	87,0	57,6	152,2	109,0	384	170	749	245	1 294	392	2 590	574	4 546		
12.9	1 080	Greased	0,15	39,5	59,3	57,6	103,8	109,0	261	170	511	245	883	392	1 766	574	3 100		

Copyright International Organization for Standardization
© ISO 2012 – All rights reserved

Table B.9 — Values of preload F_{Pr} (klbs) and tightening torque T_o (ft-lbs) for ISO M bolts approximated in inches, valid with a friction washer

Nominal ISO diameter (mm, in) normal pitch																	
ISO M bolt			M 10		M 12		M 16		M 20		M 24		M 30		M 36		
d	mm	approx. in	10	6/16	12	8/16	16	10/16	20	13/16	24	5/16	30	13/16	36	17/16	
P	mm	approx. in	1,5	1/16	1,8	1/16	2,0	1/16	2,5	2/16	3,0	2/16	3,5	2/16	4,0	3/16	
d_3 **neck**	mm	approx. in	8,2	5/16	9,9	6/16	13,5	9/16	16,9	11/16	20,3	13/16	25,7	1	31,1	14/16	
S **neck**	mm^2	approx. in^2	52,3	0,08	76,25	0,12	144,1	0,22	225,2	0,35	324,3	0,50	519,0	0,80	759,3	1,18	
σ/σ_y =	1		**0,70**		**0,70**		**0,70**		**0,70**		**0,70**		**0,70**		**0,70**		
Stainless steel bolts																	
Method with K_{nut} factor				F_{Pr}	T_o	F_{Pr}	T_o	F_{Pr}	T_o	F_{Pr}	T_o	F_{Pr}	T_o	F_{Pr}	T_o	F_{Pr}	T_o
Material	σ_{ksi}	**State**	K_{nut}	klbs	lbs-ft	klbs	lbs-ft	klbs	lbs-ft	klbs	lbs-ft	klbs	lbs-ft	klbs	lbs-ft	klbs	lbs-ft
SS 50	210	Ungreased	0,22	1,7	12,5	2,5	21,8	4,8	55	7,4	108	10,7	186	17,2	372	25,1	652
SS 50	210	Greased	0,15	1,7	8,5	2,5	14,9	4,8	38	7,4	73	10,7	127	17,2	253	25,1	445
SS 70	450	Ungreased	0,22	3,7	26,7	5,4	46,8	10,2	118	16,0	230	23,0	398	36,8	796	53,8	1 398
SS 70	450	Greased	0,15	3,7	18,2	5,4	31,9	10,2	80	16,0	157	23,0	271	36,8	543	53,8	953
SS 80	600	Ungreased	0,22	4,9	35,7	7,2	62,4	13,6	157	21,3	307	30,6	531	49,1	1 062	71,8	1 864
SS 80	600	Greased	0,15	4,9	24,3	7,2	42,5	13,6	107	21,3	209	30,6	362	49,1	724	71,8	1 271
Allied steel bolts																	
5.8	400	Ungreased	0,22	3,3	23,8	4,8	41,6	9,1	105	14,2	205	20,4	354	32,7	708	47,8	1 243
5.8	400	Greased	0,15	3,3	16,2	4,8	28,4	9,1	71	14,2	140	20,4	241	32,7	483	47,8	847
8.8	640	Ungreased	0,22	5,3	38,0	7,7	66,6	14,5	168	22,7	328	32,7	566	52,3	1 133	76,5	1 988
8.8	640	Greased	0,15	5,3	25,9	7,7	45,4	14,5	114	22,7	223	32,7	386	52,3	772	76,5	1 356
10.9	900	Ungreased	0,22	7,4	53,5	10,8	93,6	20,4	236	31,9	461	46,0	796	73,6	1 593	107,6	2 796
10.9	900	Greased	0,15	7,4	36,5	10,8	63,8	20,4	161	31,9	314	46,0	543	73,6	1 086	107,6	1 906
12.9	1 080	Ungreased	0,22	8,9	64,2	13,0	112,3	24,5	283	38,3	553	55,2	955	88,3	1 911	129,2	3 355
12.9	1 080	Greased	0,15	8,9	43,8	13,0	76,6	24,5	193	38,3	377	55,2	651	88,3	1 303	129,2	2 288

B.5.4 Tightening by checking elongation

A theoretically more precise method is to check the elongation of the screw with either a micrometer, a dial gauge or by the “turn of nut” method. For this method, however, the clamped length, L, of the bolt, and the elastic modulus and compressed area of the various materials around the bolts and under stress (e.g. FRP bottom) need to be known. Neglecting these considerations, a crude simplification gives $\delta L/L = \sigma_{pr}/E$.

EXAMPLE When tightening an M 20 SS A4 80 bolt, the pre-stress is σ_{pr} = 0,7 × 600= 420 N/mm^2. If the clamped length is 4d = 80 mm $\delta L/L = \sigma_{pr}/E$ = 420/210 000 = 0,2 % and the elongation δL = 0,002L = 80 × 0,002 = 0,16 mm, which is not easy to measure. The turn of nut for a normal pitch of 2,5 mm is 0,16/2,5 = 0,064 turns = 23° — also difficult to measure with accuracy. To sum up, the elongation or turn of nut methods are probably more easily applied for long bolts rather than for short ones.

Copyright International Organization for Standardization
© ISO 2012 – All rights reserved

B.5.5 "Established practice" recommendations for installation of bolted keels and bolt tightening

Before installing, it should be checked that the nut can freely run down the thread without hanging up (snagging).

When installing, it should be ensured that the keel and hull mate correctly. This usually requires the use of an intermediate layer of gasketing material or jointing compound (for further details, see D.4.7).

When tightening, a two stage process is recommended:

a) first, tighten to "snug fit", i.e. a full effort of a person with the appropriately sized wrench;

b) then, if the pre-stressing torque is greater than snug fit (to be tested by a torque wrench), bring up to torque with a torque wrench.

When re-installing, the same check as above should be made, replacing or adjusting screws or nuts when worn.

Bolt threads may need to be cleaned up with a die or a thread correcting tool if they have been highly loaded or galled.

A friction washer should be added above the backing plate recommended in Table D.2.

The nuts should be blocked with a wing washer, counter nut, gluing compound, punch mark, gel coat or laminate, etc. These methods may increase the nut friction (K_{nut} coefficient without grease raised from 0,22 to 0,25/0,3) and the tightening torque for the same preload.

B.6 "Established practice" for welds on metal-fabricated keels

The production of a fabricated keel or other components with restricted access may require the use of slot and plug welds.

NOTE A *slot weld* is a slot with a fillet weld around its boundary; a *plug weld* is a slot completely filled with welded metal.

Instances of poor performance under fatigue-inducing loads suggest that consideration should be given to replacing these by a continuous weld (i.e. placing a plating seam over a flanged internal stiffener and welding along the entire seam; see Figure B.1) or by evaluating the proposed configuration by calculation and inspection (see Annex F). This is particularly important at the root of the fin where stresses are higher and close to other components such as the canting keel trunnion. In general, slot welds are preferable to plug welds, and the latter are not allowed in high stress areas. For the most critical welds on keels, the use of backing plate and, possibly, grinding of the weld is also recommended to improve fatigue life (see Table F.2).

a) Transverse butt weld on backing strip **b) Flange connection with L-profile as backing strip**

Key

1 one or several welds grounded to form a smooth fillet

Figure B.1 — Examples of recommended one-side welding

Copyright International Organization for Standardization
© ISO 2012 – All rights reserved

Requirements on weld quality are not within the scope of this annex, but it is highly recommended that the quality of the welds of a fabricated keel be monitored. For welds on steel keels, the applicable International Standard is ISO 5817. It defines several levels of quality: B, Stringent; C, Intermediate; and D, Moderate. The difference between qualities C and B is mainly the amount and size of porosity and other minor imperfections. No surface cracks, lack of fusion or penetration are permitted. More imperfections are allowed by D.

Level C is the minimal recommended level. For critical welded joints — for example, those on the root of deep sailboat keels, and particularly slot welds — quality level B is recommended. For the same type of joints it is also recommended that a specific non-destructive testing such as radiographic, ultrasonic or magnetic induction, as relevant, be applied.

Copyright International Organization for Standardization
© ISO 2012 – All rights reserved

Annex C
(informative)

"Established practice" structural arrangement for ballast keels

C.1 Floors and girders

C.1.1 General

Unless otherwise stated, transverse structural elements are called *floors* in the rest of this part of ISO 12215, even if they are bulkheads, partial bulkheads, deep floors, etc. A girder is any fore- and aft-running structural element and can be a conventional stiffener, berth side or similar partial bulkhead.

C.1.2 Length of floor(s), L_F

Length of floor, L_F, expressed in metres (m) is the transversal length of a floor, which is the distance between points where vertical loads are transferred to the structure. Floor length may be taken, alternatively, as any of the following:

— L_{F1}, as in Figure C.1 a), between the points where the horizontal part of the floor intersects the frame (or their prolongation where there is a fillet radius); this could be a little optimistic if the frame is fully fixed, but correct for simply supported or semi-fixed;

— L_{F2}, as in Figure C.1 a), between the points where the plating has reached an angle greater than 20° to 30° against the horizontal; however, this might be conservative if the frame is considered fully fixed;

— L_F, between strong longitudinal stiffeners (e.g. girders, bunk supports, etc.), as in Figure C.1 b), and if the floor can transfer to them that part of the vertical load not already transferred into the hull structure, in which case, the floors may end with a bracket [note a, right side of Figure C.1 b)], or without [left side of Figure C.1 b)];

— L_F, between the ends of a simply supported floor, as in Figure C.1 c). It is however important that shear transmission into the side shell is achieved and that the floor end depth should not terminate so as to give negligible floor web area combined with near horizontal side shell as shown in Figure C.1 c). In Figure C.1 d) the angle of the plating allows a non-thin ending and a good vertical load transfer.

Thus there is some room for interpretation of the definition of the length of floors. ISO 12215-5:2008, 9.2 and ISO 12215-6 may also be used for determination of L_F. However, ISO 12215-6:2008, 6.4.3 ("Egg-box" grid) is too crude for application to keel grids and should not be used. A grillage analysis is recommended.

Copyright International Organization for Standardization
© ISO 2012 – All rights reserved

C.1.3 End fixity conditions

The end fixity conditions may be taken as

— simply supported (zero bending moment at the ends), or

— fully fixed (zero slope at each end).

Guidance is provided by Figure C.1. Where the end conditions are uncertain, both cases should be analysed and the worst case used.

The floor shown in Figure C.1 a), and the right end of L_F in Figure C.1 b), may be considered fully fixed. The left end of Figure C.1 b) is more problematic, as it must be ascertained that the inner skin of the girder is strong and stiff enough to ensure end fixity. If in doubt, consider the floor as simply supported. The floor shown in Figure C.1 d), may be considered fully fixed if the included angle between the bottom and the side is less than 135° (which is the case in the drawing) and simply supported if the angle is >135°. The floor shown in Figure C.1 c) is definitely simply supported.

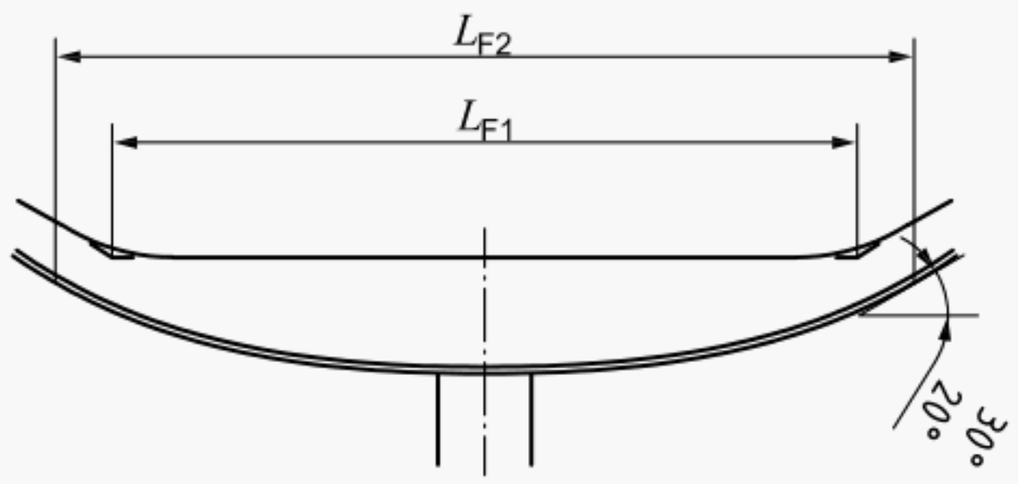

a) Choice between L_{F1} at intersection of horizontal part and frame or L_{F2} at 20°/30° from horizontal

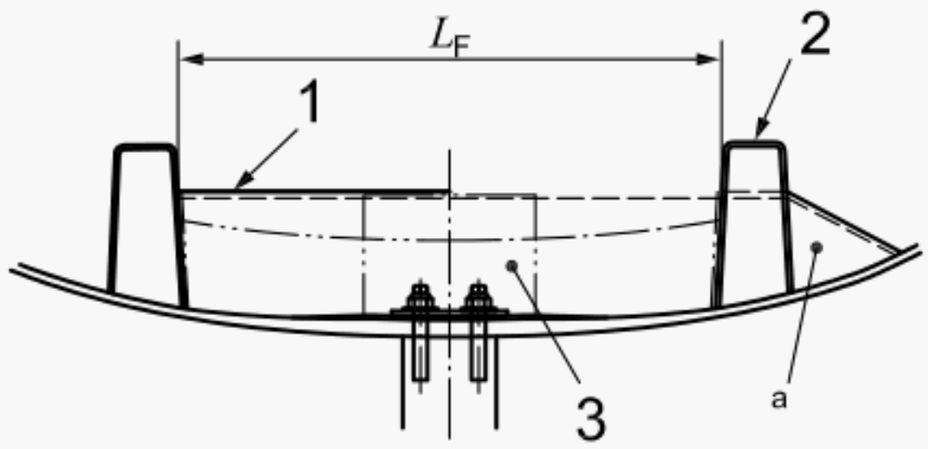

b) L_F where the floors are between two strong girders

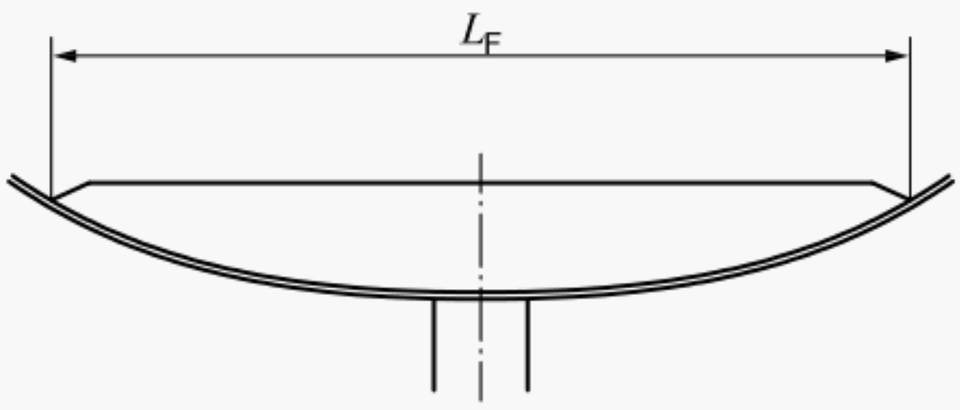

c) L_F for floors with simply supported ends

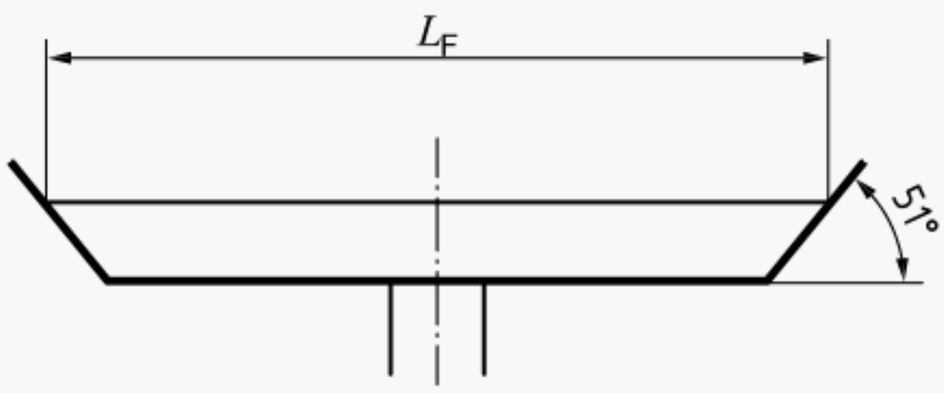

d) Floor with hard chined bottom

Key

1 floor

2 girder

3 extra tabbing in way of bolts to transfer their load (see Table D.2)

a For transferring the end fixity moment, it is preferable that the floor continue with a slope outside of the girder (right), but it may also stop on the girder.

Figure C.1 — Length of floors

Copyright International Organization for Standardization

C.2 Analysis of floor strength — Flush-mounted fixed keels (flanged or unflanged), either directly mounted to the hull or via a tuck/stub keel

C.2.1 Basis of method

Each floor is subjected to a proportion of the applied transverse moment, $M_{1.2}$ (load case 1) or a proportion of the vertical force, $F_{\mathrm{V}i}$ (load cases 3 or 4). The methods for apportioning the total forces/moments are described below. The loads are applied on each floor as a pair of vertical forces separated transversely by a distance, b_i.

The resulting shear force (F) and bending moments (M) in the floor depend on load type, separation of forces (width of keel top) and end conditions. Figure C.2 and Table C.1 show idealized bending moments and shear forces according to load type and end fixity. In case of doubt, see Notes 1 to 3 of Table C.1.

The separation of the applied forces for each floor, b_i, shall be taken as the greater of

— 0,12$L_{\mathrm{F}i}$, where $L_{\mathrm{F}i}$ is the length of floor, i;

— the maximum width of the fin at its root;

— the maximum spacing of bolts on a flanged keel.

The bending moment and shear force which corresponds to the stress (or strain) first reaching the design value defined by Equation (1) shall be calculated using Figure C.2, Table C.1 and the methods given in ISO 12215-5.

The ratio of the *offered* value to the *required* value shall not be less than 1,0.

C.2.2 Determination of floor effectiveness

This annex provides a simplified method which does not pretend to cover all keel support gird configurations, and in which the following assumptions are made.

— The floors carry 100 % of the transverse bending moment and forces (load case 1), i.e. nothing is carried by any longitudinal girders except, where relevant, when connecting these floors.

— In the absence of a stiff girder or pair of girders, only the floors which are directly connected to the ballast keel via keel bolts or that lie between the leading and trailing edges of the fin in the absence of bolts may be considered as effective. Floors fore or aft of this zone are neglected.

— Where there is a stiff girder or pair of girders, all floors which are connected to that girder (or girders) may be considered effective. To apply this condition, the total girder stiffness shall be at least 50 % of the total floor stiffness. The stiffness of floors and girders shall be assessed as per C.2.3.

— For grids composed of other than one centreline or two near-centreline girders, the methods of this annex are not applicable and the computational methods defined in Clause 8 shall be applied.

— For grids composed of no substantial floors, or floors which simply act as short-length shear webs to connect a pair of near-centreline girders, the methods of this annex are not applicable and the computational methods defined in Clause 8 shall be used.

Copyright International Organization for Standardization
© ISO 2012 – All rights reserved

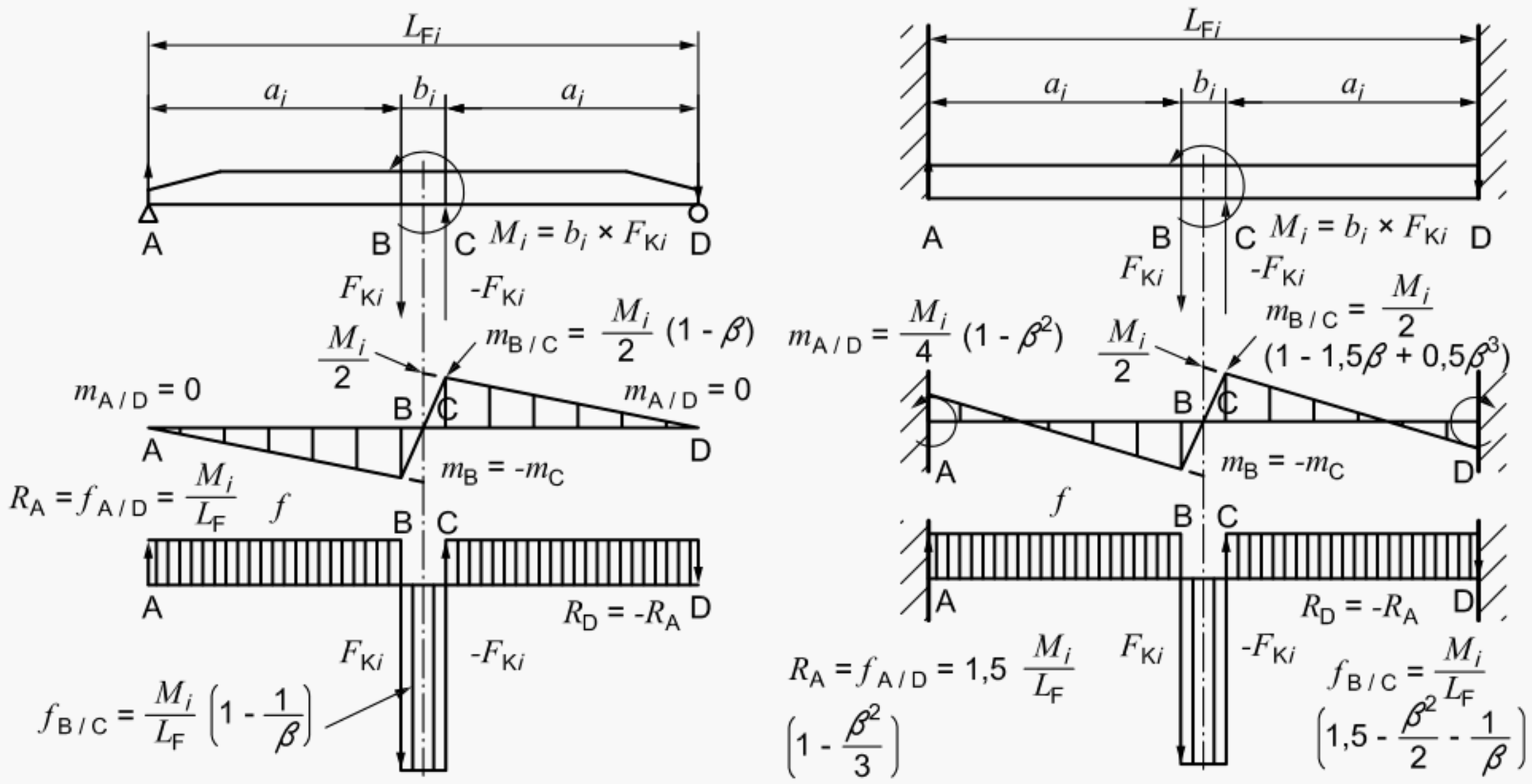

a) Load case 1 with simply supported ends

b) Load case 1 with fully fixed ends

c) Load cases 3 or 4 with simply supported ends

d) Load cases 3 or 4 with fully fixed ends

Figure C.2 — Idealized shear force/bending moment diagram and dimension of floors with top of keel width, b

Copyright International Organization for Standardization
© ISO 2012 – All rights reserved

Table C.1 — Equations of shear force f and bending moment m for load cases 1 and 3 or 4 for simply supported or fully fixed end conditions (flush-mounted keels)

Load case	End condition	See Figure	At A and D	At B and C
			f in floor	
1[a b]	SS	C.2 a)	$f_{A/D} = \frac{M_i}{L_{Fi}}$	$f_{B/C} = \frac{M_i}{L_{Fi}}\left(1 - \frac{1}{\beta_i}\right)$
	FF	C.2 b)	$f_{A/D} = 1{,}5\frac{M_i}{L_{Fi}}\left(1 - \frac{\beta_i^2}{3}\right)$	$f_{B/C} = \frac{M_i}{L_{Fi}}\left(1{,}5 - \frac{\beta_i^2}{2} - \frac{1}{\beta_i}\right)$
3 or 4[c]	SS	C.2 c)	$f_{A/D} = \frac{F_{Vi}}{2}$	$f_{B/C} = \frac{F_{Vi}}{2}$
	FF	C.2 d)	$f_{A/D} = \frac{F_{Vi}}{2}$	$f_{B/C} = \frac{F_{Vi}}{2}$
			m in floor	
1[a b]	SS	C.2 a)	$m_{A/D} = 0$	$m_{B/C} = \frac{M_i}{2}(1 - \beta_i)$
	FF	C.2 b)	$m_{A/D} = \frac{M_i}{4}\left(1 - \beta_i^2\right)$	$m_{B/C} = \frac{M_i}{2}\left(1 - 1{,}5\beta_i + 0{,}5\beta_i^3\right)$
3 or 4[c]	SS	C.2 c)	$m_{A/D} = 0$	$m_{B/C} = \frac{F_{Vi} \times L_{Fi}}{4}(1 - \beta_i)$
	FF	C.2 d)	$m_{A/D} = \frac{F_{Vi} \times L_{Fi}}{4}\left(\frac{1 - \beta_i^2}{2}\right)$	$m_{B/C} = \frac{F_{Vi} \times L_{Fi}}{4}\left(\frac{(1 - \beta_i)^2}{2}\right)$

NOTE 1 In these formulas, the symbols for shear force and bending moment in the floor are respectively f and m, whereas those for the force and moment induced by the keel under the load case are respectively F and M.

NOTE 2 If the boundary condition cannot be reasonably well idealized as being either simply supported or fully fixed, then the options are to

— select the boundary condition which gives the worst case for shear force and bending moment, or

— refer to computational methods as described in Clause 8.

NOTE 3 The values of $f_{B/C}$ can have high negative values, as shown in the shear diagrams of a) and b).

[a] For each floor $\beta_i = b_i/L_{Fi}$ and need not be taken less than 0,12, where b_i is the distance between the forces F_{Ki} for load case 1 or $F_{Vi}/2$ for load cases 3 and 4, and L_{Fi} is the length of the floor. Also, $f_{B/C}$ need not be taken greater than $2f_{A/D}$.

[b] M_i is the moment induced to floor i by the keel bending.

[c] F_{Vi} is the total load applied to the floor under consideration for load case 3 or 4, i.e. $F_{Vi} = 2(F_{Vi}/2)$.

Copyright International Organization for Standardization
© ISO 2012 – All rights reserved

C.2.3 Determination of floor and girder stiffness

The stiffness coefficient $K_{\text{FLOOR}\,i}$ for each floor i of n_{F} floors is

$$K_{\text{FLOOR}\,i} = \left(\frac{k_{\text{EF}} \times EI_{\text{F}}}{L_{\text{F}}{}^{3}} \right)_i \tag{C.1}$$

with i = 1 to n_{F}

where

k_{EF} is the end fixity coefficient taken as 1 for simply supported ends and 4 for fixed ends;

EI is the flexural rigidity, in N·mm^2, usually obtained by laminate stack analysis for FRP or the product of elastic modulus and second moment of area for other materials (see ISO 12215-5:2008, Annex C);

L_{F} is the effective length of the floor defined in C.1.2, in metres (m).

The stiffness coefficient $K_{\text{GIRDER}\,j}$ of the centreline girder (j = 1) or pair of near-centreline side girders (j = 2) is calculated as follows:

$$K_{\text{GIRDER}\,j} = \left(\frac{k_{\text{EF}} \times EI_{\text{G}}}{L_{\text{G}}{}^{3}} \right)_j \tag{C.2}$$

with j = 1 or 2

And the girder/floor stiffness ratio is:

$$K_{\text{GFSR}} = \frac{\sum_{j=1}^{n_{\text{g}}} \left(K_{\text{GIRDER}} \right)_j}{\sum_{i=1}^{n_{\text{F}}} \left(K_{\text{FLOOR}} \right)_i} \tag{C.3}$$

If K_{GFSR} > 0,5, the floors which lie within the length of the girder may be regarded as effective.

C.2.4 Treatment of bulkheads or very deep floors

In all load cases, *floors*, i.e. any bottom stiffeners, take a proportion of the total load depending on their relative stiffness. If one of the *floors* is very much stiffer than the others, it “attracts” more load.

For bulkheads, this effect may be overestimated by the simple load-distribution method. In order to prevent the stiff floor attracting an unrealistically high load, the EI value is capped to obtain the following result.

For bulkhead or partial bulkhead, the maximum effective height shall not be taken greater than

— for stiffened metal bulkheads, 70t,

— for all other materials single skin or cored bulkheads, 45t,

where t is the actual thickness for single skin and 80 % of the total thickness for sandwich.

Copyright International Organization for Standardization
© ISO 2012 – All rights reserved

C.2.5 Load case 1

The proportion of the total transverse moment, $M_{1.2}$, carried by each floor depends principally on the relative stiffness of the floor and the separation, b, of the forces transmitted via the keel bolts or fin edges. It is given by

$$M_i = M_{1.2} \times \frac{F_{\text{FLOOR}i}}{\sum F_{\text{FLOOR}i}} \tag{C.4}$$

expressed in newton metres (N·m) as the proportion of $M_{1.2}$ carried by each floor

where

$$F_{\text{FLOOR}i} = K_{\text{FLOOR}i} \times K_\beta \tag{C.5}$$

is the floor factor, i

$K_{\text{FLOOR}i}$ is the floor stiffness factor for floor i to be calculated for each of n_F floors as per (C.1);

K_β is the keel bolt separation factor, where

— for keels with a flange and where the transverse bolt spacing is very similar at each floor position or for non-bolted (welded keels), or where a stiff girder is present and floors outside the keel plan/bolt locations are considered effective, $K_\beta = 1$;

— for keels without a flange, where the bolts lie within the fin root plan, the transverse bolt spacing varies and the floors closer to the leading/trailing edges are less heavily loaded than those in mid-chord region, K_β shall be taken as

$K_\beta = 0{,}2n_F - 0{,}2$ for the aftmost floor,

$K_\beta = 1$ for the foremost floor;

— for the remaining floors in the mid-chord region and according to the number of effective floors, n_F:

$K_\beta =$

1,6 for $n_F = 3$,

1,2 for $n_F = 4$,

1,067 for $n_F = 5$, and

1,0 for $n_F > 5$.

Therefore, for cases where the floors have similar stiffness and are numerous (n_F >5), and/or where $K_\beta = 1$ for the other reasons listed above,

$$M_i = \frac{M_{1.2}}{n_F} \tag{C.6}$$

Once M_i is known, f_i may be found using the equations of Table C.1.

Copyright International Organization for Standardization
© ISO 2012 – All rights reserved

C.2.6 Analysis under load case 3 (vertical pounding)

The design vertical force, F_3, is distributed amongst the floors according to

$$F_{\mathrm{v}i} = F_3 \times \frac{K_{\mathrm{FLOOR}i}}{\sum K_{\mathrm{FLOOR}i}} \tag{C.7}$$

expressed in newtons (N) as the vertical force on each floor in load case 3, and

$$F_{\mathrm{v}i} = \frac{F_3}{n_{\mathrm{F}}} \tag{C.8}$$

expressed in newtons (N) as the vertical force for cases where all the floors have similar stiffness.

C.2.7 Resistance to load case 4 (longitudinal impact)

C.2.7.1 Vertical forces

The moment from design longitudinal force F_4 is reacted by vertical forces, $F_{\mathrm{VF}4i}$, distributed among the floors as the vertical force on floor i required to resist $M_{4.2}$. See Figure C.2 and Table C.1.

C.2.7.2 Centre of rotation

The keel is assumed to rotate about a centre of rotation, R, located in the plane of junction between the keel and hull and at a longitudinal distance x_{R} from any arbitrary datum (0 in Figure C.3) such as

$$x_{\mathrm{R}} = \frac{\sum\left[x_i \times \left(K_{\mathrm{FLOOR}}\right)_i\right]}{\sum\left(K_{\mathrm{FLOOR}}\right)_i} \tag{C.9}$$

expressed in metres (m) as the longitudinal position from any datum to the rotation point

where x_i is the longitudinal distance between the datum and the centre of floor i (see Figure C.3).

Copyright International Organization for Standardization © ISO 2012 – All rights reserved

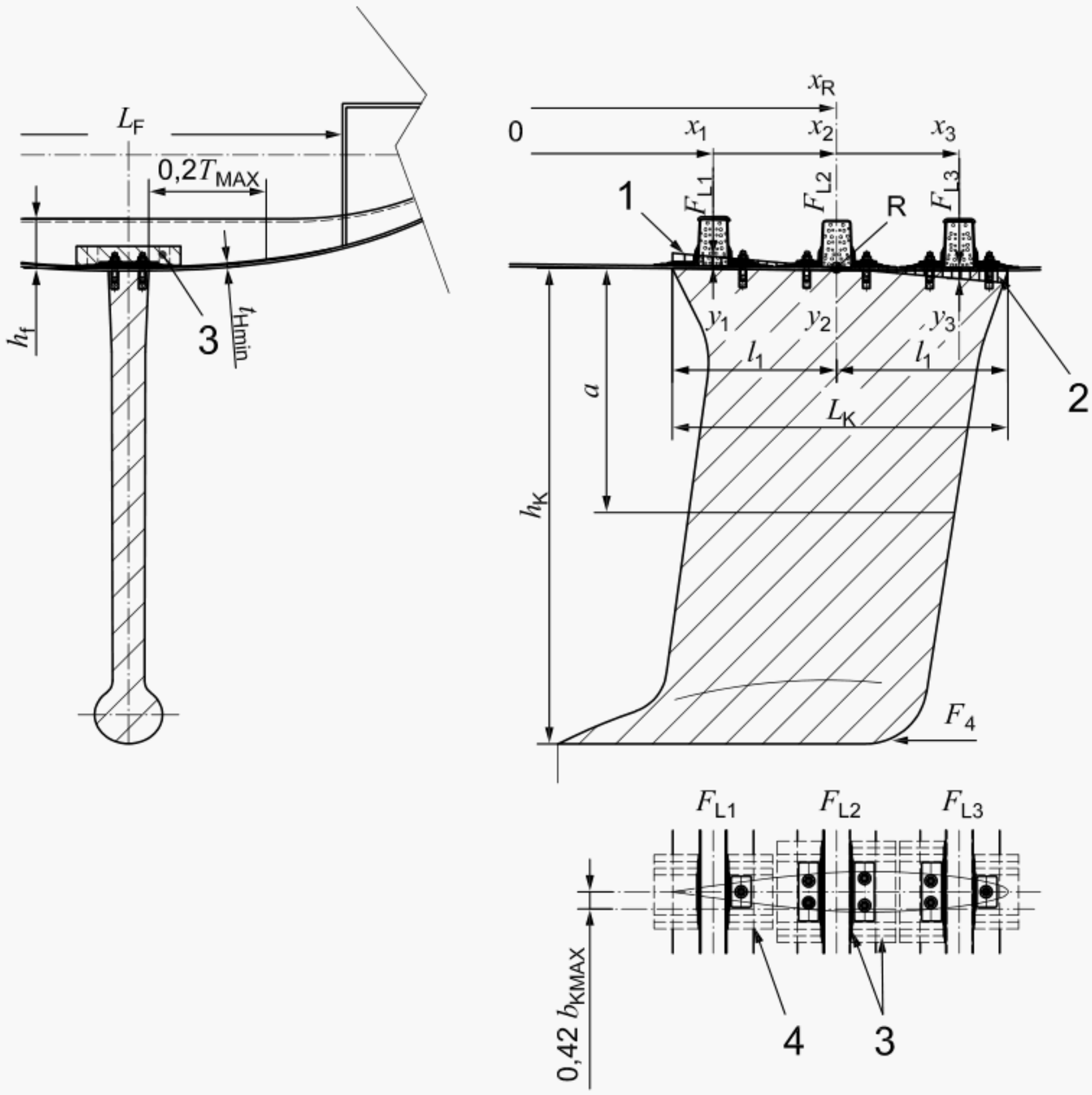

Key

1 vertically hatched area aft of R (x_R from datum), the top of ballast keel pushes the structure upwards

2 vertically hatched area forward of R, the bolts pull downwards

3 web lapping tray laminate (see Table D.2 and Figure D.3)

4 limit of normal flange of floor (see Figure D.1)

Figure C.3 — Typical floor arrangement in lateral view and longitudinal grounding force

C.2.7.3 Forces on floors (without longitudinal girder)

The vertical force on each floor is expressed, in newtons (N), by Equation (C.10):

$$F_{VF4i} = M_{4.2} \frac{(K_{FLOOR})_i \times (x_R - x_i)}{\sum\left[(K_{FLOOR})_i \times (x_R - x_i)^2\right]} \tag{C.10}$$

The vertical force, F_{VF4i}, for each floor shall be used to calculate the bending moment and shear force using the equations given in Table C.1.

In the case where all the floors are identical in terms of geometry, layup, length, spacing and end fixity, the centre of rotation will be at the central floor or midway between the two central floors, and

Copyright International Organization for Standardization
© ISO 2012 – All rights reserved

$$F_{\mathrm{VF4}i} = M_{4.2} \frac{l_i}{\sum l_i^2} \tag{C.11}$$

expressed in newtons (N) as the force on each floor for identical floors, where l_i is the distance from R.

C.2.7.4 Forces on floors (with longitudinal girder)

The girder-floor stiffness ratio, K_{GFSR}, is calculated from Equation (C.3). Using a new variable:

$$\chi = \log10\left(K_{\mathrm{GFSR}}\right) = \log10 \frac{\sum_{j=1}^{n_{\mathrm{g}}} \left(K_{\mathrm{GIRDER}}\right)_j}{\sum_{i=1}^{n_{\mathrm{F}}} \left(K_{\mathrm{FLOOR}}\right)_i} \tag{C.12}$$

The average force proportion, P_{G}, taken by the girder is

$$P_{\mathrm{G}} = 0{,}0148\chi^4 + 0{,}0055\chi^3 - 0{,}1443\chi^2 + 0{,}1863\chi + 0{,}9323 \tag{C.13}$$

The corrected vertical forces finally carried by floors, i, and girders, j, are, respectively,

$$F_{\mathrm{CVF4}i} = F_{\mathrm{VF4}i} \times \left(1 - P_{\mathrm{G}}\right) \tag{C.14}$$

expressed in newtons (N) as the corrected vertical force due to F_4 acting on each floor i, and

$$F_{\mathrm{CVG4}j} = F_{\mathrm{VF4}i} \times P_{\mathrm{G}} \tag{C.15}$$

expressed in newtons (N) as the corrected vertical force due to F_4 acting on each girder j at the point at which it intersects floor i.

The girder is therefore loaded by a point force for each floor intersection point, i.e. n_{F} forces — some acting upwards, some acting downwards. Where there are two girders, the force in Equation (C.15) may be assumed to be shared equally between each girder.

Alternatively, the relative girder to floor stiffness may be estimated and use made of Table C.2.

C.3 Analysis of floor strength — Other types

C.3.1 Non-flush mounted keel configurations

Such configurations include

— keels with a “male” girder mounted in a female girder made from a recess in the bottom of the craft, often characterized by a few bolts on the centreline only, which are mainly intended to carry the “dead” weight of the keel in the upright condition, a wedge shape often being used to transmit vertical offset forces,

— lifting keels mounted via pulleys or ram within a keel box structure, which may extend up and be attached to the deck head, or free-standing and terminating at a point some distance above the waterline, and

— canting keels.

See Figure C.4.

Copyright International Organization for Standardization
© ISO 2012 – All rights reserved

Table C.2 — Load case 4 girder load share, P_G

Girder stiffness compared with floor stiffness	$K_{GFSR} = \frac{\sum_{j=1}^{n_g} (K_{GIRDER})_j}{\sum_{i=1}^{n_F} (K_{FLOOR})_i}$	Girder load share P_G
Low girder stiffness ↓	0,1	0,61
	0,25	0,77
	0,5	0,86
As stiff as floor	1	0,93
High girder stiffness	2	0,98
	3	0,99

This is not the "grillage reaction", introduced to bring grid intersection points into geometric compatibility, but a very rough approximation which recognizes that stiff girders can play a major part in carrying the grounding load. A more accurate method is to employ grillage theory, matrix-displacement method or finite element analysis with the horizontal impact grounding load F_4 applied at a distance h_{F4} below the floor-girder grillage plane.

The method was developed by an FEA evaluation of a limited number of floors/girder configurations. In all cases, the girders and floors were taken as rigidly supported in translation at each end. Equation (C.13) will not apply to girders which terminate on floors (i.e. the girder ends are elastically supported). The method should be regarded as very approximate and the P_G value is probably only accurate to no better than ±0,25. The use of Annex C methods and Equation (C.13) in particular shall not be used to "design" keel grids down to compliance factors (offered bending moment or shear force divided by required bending moment or shear force) close to 1,0.

This table indicates that the girders are important structural components for carrying forces from load case 4. As an alternative to using the equations given in C.2.7.4, it can be conservatively assumed that the girders carry all of load case 4 while the floors carry all of load case 1.

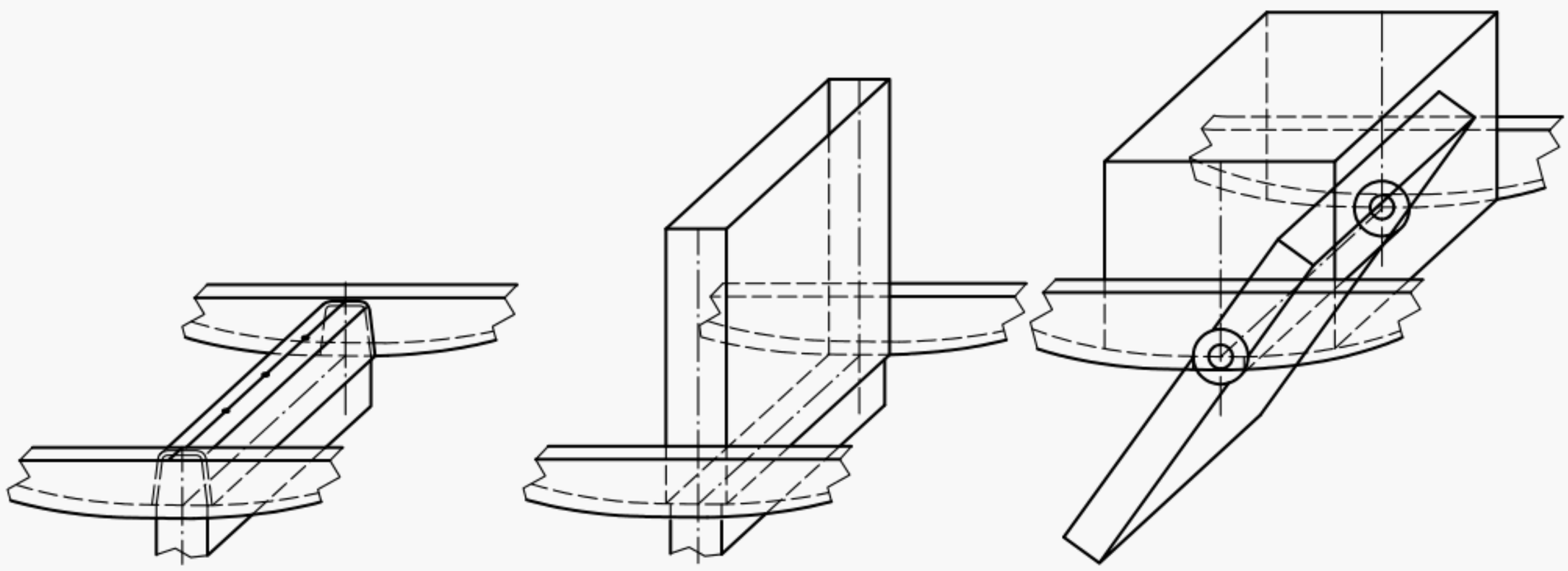

a) "Male" keel wedge into a "female" girder **b) Lifting keel** **c) Canting keel**

Figure C.4 — Non-flush mounted keel configurations

C.3.2 Encapsulated keels or tucks

Encapsulated keels are keels whose keel skins are an extension of the bottom plating, valid for both FRP and metal. For FRP they are also referred to as "moulded-in" keels.

Copyright International Organization for Standardization
© ISO 2012 – All rights reserved

For encapsulated keels and appendages, the normal established practice is to have floors and, where necessary, girders like for welded and bolted keels. Girders are often necessary to avoid “knife-edge crossing” (see ISO 12215-6) and to introduce in the floors the load from the highly stressed keel skins in compression when heeling or grounding. Buckling of keel skins shall also be avoided.Figure C.5 shows an established practice recommended structural arrangement for encapsulated keels and tucks.

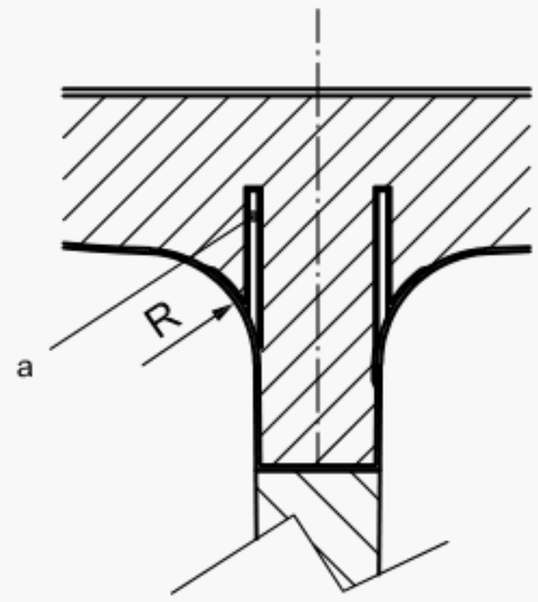

[a] If R is small and there is significant floor spacing, the vertical forces from the keel sides need to be transmitted by girders to floor webs.

Figure C.5 — Example of structural arrangements for moulded-in keels

C.3.3 Idealization model of structural arrangement

The keel configurations presented in C.3.1 and C.3.2 are best analysed by 3D numerical methods. However, it is appreciated that this might not always be an option. The following idealization is intended to define a structure which may be analysed by simple beam equations. It is intended to be a conservative approach — see the comment in Table C.2 regarding designing to low compliance factors.

NOTE 1 These structures generally defy simple analysis and the following only gives some simple cases.

The basic assumptions are the following.

— The load is carried solely by a pair of continuous (side to side) floors at the aft and fore end of the keel box, or the hull recess or the aft and fore wet box floors for a canting keel.

— Any support offered by intermediate floors between these end floors is ignored.

— The contribution of the keel box, recess or other longitudinal structure is ignored.

— The transverse bending moment (load case 1 or 2) is applied via a pair of equal and opposite, nearly horizontal forces which generate a pure couple at the centre of each floor. This appears as bearing forces induced on the keel box/recess vertical sides or the reactions generated at the lower and upper sides of bearings of the canting keel support points. The moments applied to the floors are obtained using Equation (C.4).

— The vertical force F_3 (load case 3) is distributed into two single upwards vertical forces applied at the centreline of the fore and aft floors/bulkheads. The vertical forces applied to the floors are obtained using Equation (C.7) or (C.8).

— The longitudinal force (load case 4) is transferred into the fore and aft floors/bulkheads as two equal and opposite single vertical forces applied to each floor (upwards on the aft floor and downwards on the forward floor).

NOTE 2 The stiffness distribution method of Equation (C.4) is strictly only applicable to near centrally applied point loads. Application to moments is very approximate but is considered to be a reasonable simplification when the two floors have reasonably similar stiffnesses.

Copyright International Organization for Standardization
© ISO 2012 – All rights reserved

C.3.4 Equations

The floor bending moment and shear force equations follow those of Table C.1 except the transverse separation of vertical forces is zero. The term β is zero and the shear force is constant along the length of each floor. See Table C.3.

Table C.3 — Equations of shear force f and bending moment m for load cases 1 or 2 and 3 or 4 for simply supported or fully fixed end conditions (recessed, lifting and canting keels)

Load case	End condition	See Figure	At A and D	At B and C
f in floor				
1 or 2[a]	SS	C.2 a)	$f_{A/D} = \frac{M_i}{L_{Fi}}$	$f_{B/C} = \frac{M_i}{L_{Fi}}$
	FF	C.2 b)	$f_{A/D} = 1{,}5\frac{M_i}{L_{Fi}}$	$f_{B/C} = 1{,}5\frac{M_i}{L_{Fi}}$
3 or 4[b]	SS	C.2 c)	$f_{A/D} = \frac{F_{Vi}}{2}$	$f_{B/C} = \frac{F_{Vi}}{2}$
	FF	C.2 d)	$f_{A/D} = \frac{F_{Vi}}{2}$	$f_{B/C} = \frac{F_{Vi}}{2}$
m in floor				
1 or 2[a]	SS	C.2 a)	$m_{A/D} = 0$	$m_{B/C} = \frac{M_i}{2}$
	FF	C.2 b)	$m_{A/D} = \frac{M_i}{4}$	$m_{B/C} = \frac{M_i}{2}$
3 or 4[b]	SS	C.2 c)	$m_{A/D} = 0$	$m_{B/C} = \frac{F_{Vi} \times L_{Fi}}{4}$
	FF	C.2 d)	$m_{A/D} = \frac{F_{Vi} \times L_{Fi}}{8}$	$m_{B/C} = \frac{F_{Vi} \times L_{Fi}}{8}$

NOTE 1 In these formulas, the symbols for shear force and bending moment in the floor are respectively f and m, whereas those for the force and moment induced by the keel under the load case are respectively F and M.

NOTE 2 If the boundary condition cannot be reasonably well idealized as being either simply supported or fully fixed, then the options are to

— select the boundary condition which gives the worst case for shear force and bending moment, or

— refer to computational methods as described in Clause 8.

a M_i is the moment induced to floor i by the keel bending.

b F_{Vi} is the total load applied to the floor under consideration for load case 3 or 4.

Copyright International Organization for Standardization
© ISO 2012 – All rights reserved

C.4 Final assessment of floors

For each floor:

— Assess local shear force f and bending moment m for each load case 1 to 4 in accordance with C.1 to C.4, and select the most demanding case.

— Check the dimensioning of the floors so that the design tensile, compressive or shear stress defined by Equation (1) and Tables 2 and 3 are not surpassed. For that purpose, ISO 12215-5 and specifically effective plating dimensions and area shall be used.

— Floor slenderness ratios may be taken from of ISO 12215-5:2008, Table 20, corrected as necessary using that standard's Table 21. For plywood and FRP floors, the values of its Table 20 may be multiplied by 1,2.

NOTE The design stresses in this part of ISO 12215 differ from the ones used in ISO 12215-5, which explains why the values of its Table 20 may be multiplied by 1,2.

— Perform mechanical properties or stiffener calculations in accordance with ISO 12215-5:2008, Annexes C to H.

Given that loss of keel can result in loss of life, the use of the simplified methods outlined in Annex C shall not be used to design down to widespread minimum compliance with the stress limits of Equation (1).

C.5 Dedicated software and spreadsheets

Although all the calculation procedures described in this annex are solvable manually using a scientific calculator, it is recognized that the practising designer may wish to use spreadsheets or software. While the use of such tools is encouraged, they should be carefully validated and not used without reference to the text of the annex, which contains many recommendations for good practice which may not be apparent from merely using the software.

Since the aim of this part of ISO 12215 is to promote safe structural arrangements for a critical component of sailing craft, users should not attempt to aim for minimal compliance and should always make reference to previous experience. Since it is necessary to make some assumptions regarding floor fixity and force separation, it is further recommended that advantage be taken of the speed of software to conduct sensitivity studies on these assumptions.

--`,,```,,,,`,`,`,`,,,,,```,,,,,,-`-`,,`,,`,`,,`---

Copyright International Organization for Standardization © ISO 2012 – All rights reserved

Annex D
(informative)

"Established practice" calculation of keel fin strength (fixed or canting) and fixed ballast keel connected by bolts

D.1 General

This annex provides "established practice" calculation procedures for sizing keel bolts, structural elements related to the bolts and fin bending strength, and gives experience-based guidelines.

D.2 Ballast keel material design strength

The mechanical properties of metals shall be in accordance with Tables B.1 or B.2, but the values of ISO 12215-3 may also be used. The mechanical properties of other materials shall be as defined in ISO 12215-5, but using the design stresses defined in Clause 5 of the present part of ISO 12215.

D.3 Strength of ballast keels under load case 1 or 2

D.3.1 General case

When subject to the loads (force and moments) defined in Clause 7, the stress in the ballast keel shall not exceed the design stress at any point.

Where the keel is made all over of the same material, a bending stress check should be carried out as follows:

$$\sigma = \frac{M_{I.1}}{SM_{\mathrm{K}}} \leq \sigma_{\mathrm{d}} \qquad \text{(D.1)}$$

expressed in newtons per square millimetre (N/mm^2)

where

$M_{I.1}$ is the bending moment due to heel, either $M_{1.1}$ or $M_{2.1}$ as defined in 7.2 or 7.3 (N·m);

SM_{K} is the transverse section modulus of the ballast keel about its neutral axis (cm^3);

σ_{d} is the design stress of any structural material of the keel, as defined in Clause 5 (N/mm^2).

Where there is a significant torsional moment, the shear stress due to torsion should be checked using the torsional modulus given in Annex E. This may require the ballast keel strength to be assessed at a number of positions, including at a keel tuck/stub extension of the hull. However, where it is obvious by inspection, the assessment need only be carried out at the top of the ballast keel (distance a from keel CG in Figure 1).

Where the keel is made of different materials, Equation (D.1) shall not be used, but the design bending moment of the keel material shall be checked to be greater than $M_{I.1}$.

Although buckling may be an issue and should be checked, it is out of the scope of this annex (see 7.8).

Copyright International Organization for Standardization
© ISO 2012 – All rights reserved

D.3.2 Bolted ballast with a top flange

The flange dimensions shall be such that the design strength in the flange shall not be surpassed under the action of the bearing pressure, p, or bolt pull, as shown in Figure D.1 b2).

The proportions between the flange protruding length, x (mm) and its thickness t_{FL} (mm), as shown in Figure D.1 b2), shall be such that the following equations are fulfilled.

When equalling, at design stress, the bending moment from the bolt pull with the resisting cantilever of the flange between two consecutive bolts:

$$\sigma_{dFL} = \frac{M}{SM} = \frac{F_{bolt} \times x}{\frac{b_s \times t_{FL(x \to x_{MAX})}^2}{6}} = \frac{6F_{bolt} \times x}{b_s \times t_{FL(x \to x_{MAX})}^2} \text{ or } t_{FL(x \to x_{MAX})} = \left(\frac{6F_{bolt} \times x}{b_s \times \sigma_{dFL}}\right)^{0,5} \quad \text{(D.2)}$$

$$F_{bolt} = \frac{\pi}{4}\left(0,85 d_{req}\right)^2 \times 1,2\sigma_{dbolt} = 0,681 d_{req}{}^2 \times \sigma_{dbolt} \quad \text{(D.3)}$$

The neck diameter (see D.4.1) is considered to be 0,85d and for the coefficient 1,2 = 0,8/0,67 on σ_{dbolt} transforms from bolt stress to keel stress in load case 1 of Table 3.

The required thickness of the flange between x and x_{MAX}, at the connection point with the keel is

$$t_{FL(x \to x_{MAX})} = \left(\frac{6F_{bolt} \times x}{b_s \times \sigma_{dFL}}\right)^{0,5} = \left(\frac{4,08 d_{req}{}^2 \times \sigma_{dbolt} \times x}{b_s \times \sigma_{dFL}}\right)^{0,5} = 2,02 d_{req}{}^2 \left(\frac{\sigma_{dbolt}}{\sigma_{dFL}} \frac{x}{b_s}\right)^{0,5} \quad \text{(D.4)}$$

where

F_{bolt} is the bolt force derived from load case 1 (N);

x is the distance (mm) between the considered point and the point of application of the bolt force, not to be taken greater than x_{MAX} at the inner fillet connection to keel, nor smaller than 0,5 x_{MAX};

$t_{FL(x \to x_{MAX})}$ is the flange thickness (mm) at a distance from bolt axis x to x_{MAX}, the connection point with the keel

d_{req} is the bolt nominal (not neck) diameter (mm) taken from calculations of D.4 for load case 1;

b_s is the average bolt spacing (mm);

σ_{dFL} is the design stress of the keel flange (N/mm^2) as defined in Clause 5;

$1,2\sigma_{dbolt}$ is the tensile design stress of the bolt (N/mm^2) if considering k_{LC} = 0,8 for bolt force.

NOTE The limitation of $x \geq 0,5\, x_{MAX}$ entails $t_{FL_{MIN}} \geq 0,7 t_{FL_{MAX}}$ in respect of bolt or outboard.

See also CAUTION in D.4.2.

EXAMPLE In a Category A craft using M12 A4-80 SS bolts with σ_{dbolt} = 400 N/mm^2 and EN-GJL-150 Lamellar graphite cast iron flange, with $\sigma_{dFL} = \sigma_{LIM} \times k_{MAT} \times k_{LC} = 75 \times 0,375 \times 0,8 = 22,5$ N/mm^2 for load case 1, Equation (D.3) gives the following:

Copyright International Organization for Standardization © ISO 2012 – All rights reserved

$$t_{\mathrm{FL}(x \to x_{\mathrm{MAX}})} = 2{,}02 d_{\mathrm{req}}{}^{2} \left(\frac{400}{22{,}5} \frac{x}{b_{\mathrm{s}}} \right)^{0{,}5} = 102{,}2 \left(\frac{x}{b_{\mathrm{s}}} \right)^{0{,}5}$$

Therefore, [see Figure D.12 b2)], with $b_{\mathrm{s}} = 200$ mm and $d_{\mathrm{breq}} = 12$ mm, at the junction of fillet with the keel, $x = 42$ mm the flange thickness needs to be $t_{\mathrm{FL}(x \to x_{\mathrm{MAX}})} = 102{,}2 \times (42/200)^{0{,}5} = 46{,}8$ mm.

D.3.3 Cast iron ballasts

Production sailboat ballasts are frequently made out of cast iron with lamellar graphite and connected by screws or bolts. The brittleness and surface hardness of this material makes it difficult to bore or file a thread. On non-flanged cast iron ballasts, it is good practice to include pre-threaded steel inserts before casting. Figure D.1 a2) shows such an item.

D.3.4 Lead ballast

Lead or lead alloys have very low mechanical properties. Therefore, thin and deep fins made from these metals usually need a steel framing and top flange to allow both sufficient bending strength and connection. If this framing is not fitted, regular tightening of bolts is generally required, due to lead creeping, in which case instructions for keel bolt checking and re-tightening shall be included in the owner's manual.

As screws or bolts have difficulties fixing in lead, the mechanical connection of lead ballast keel is usually made with threaded rods in place before the lead is cast. Their lower part is generally either bent (“J” rod) or connected between by plates to ensure their proper anchoring in the lead.

D.3.5 Solid and hollowed foil sections

Annex E gives the area, A, section moduli, SM, and the second moment, I, of the area for some typical solid and hollowed foil sections.

D.3.6 Welded keels

In cases of fabricated fins, extreme care shall be taken not to place the welding in high stress zones. If this cannot be avoided, the weld shall be engineered taking stress concentration factors into account.

The design stress within welds shall be taken as per Table 2 in the line: ...*within heat-affected zone*...

A fatigue analysis using Annex F or another equivalent method shall be made unless a sound technical justification is provided for the lack of an explicit fatigue strength check (see Annex A).

Where it is found that failure of a single fillet weld line could lead to potential keel loss, the design should be re-engineered to provide some measure of structural redundancy.

D.4 Analysis of bolted ballast keels

CAUTION — The methods for assessing keel bolts are based on the presumption of a broadly uniform distribution of diameter and spacing along the fin root or keel flange. The concentration of bolt size and/or number either at the centre or biased towards one end of the fin root or keel flange is regarded as outside the scope of this part of ISO 12215 and outside the norm of good practice. Where there is doubt about the lack of broadly uniform bolt distribution, the bolts should be analysed, in addition to those load cases described in Clause 7, using 25 % of load case 4 applied on the trailing edge of the keel or bulb lowest point, acting in a forward direction so as to load the trailing edge bolts in tension.

The execution of this additional load case is not expected to be a normal requirement and is not considered necessary for broadly uniformly distributed bolt configurations.

Copyright International Organization for Standardization
© ISO 2012 – All rights reserved

D.4.1 Relation between nominal bolt diameter and neck diameter

NOTE The choice of the bolt material is explained in B.2.

Table D.1 gives the correspondence between the ISO M neck diameter and the nominal diameter according to ISO thread type. Where a bolt's nominal diameter, d (mm), is on Table D.1 and the pitch, P (distance between threads), is not known, normal pitch shall be assumed.

Where a bolt diameter has not been included in Table D.1:

— if pitch P (mm) is known, then $d_{neck} = d - 1{,}227P$;

— if pitch P (mm) is not known, then $d_{neck} = 0{,}85d$ or $d = 1{,}18d_{neck}$.

Table D.1 — Values for ISO M screws

Nominal diameter d	Normal pitch				Fine pitch			
	P	d_{neck} ISO d_3	S_{neck}	d_{neck}/d	P	d_{neck} ISO d_3	S_{neck}	d_{neck}/d
mm	mm	mm	mm²		mm	mm	mm²	
10	1,50	8,16	52,3	0,816	1,25	8,47	56,3	0,847
12	1,75	9,85	76,2	0,821	1,3	10,47	86,0	0,872
14	2,00	11,55	104,7	0,825	1,5	12,16	116,1	0,869
16	2,00	13,55	144,1	0,847	1,5	14,16	157,5	0,885
18	2,50	14,93	175,1	0,830	1,5	16,16	205,1	0,898
20	2,50	16,93	225,2	0,847	1,5	18,16	259,0	0,908
22	2,50	18,93	281,5	0,861	1,5	20,16	319,2	0,916
24	3,00	20,32	324,3	0,847	1,5	22,16	385,7	0,923
27	3,00	23,32	427,1	0,864	1,5	25,16	497,2	0,932
30	3,50	25,71	519,0	0,857	2,0	27,55	596,0	0,918
33	3,50	28,71	647,2	0,870	3,0	29,32	675,2	0,888
36	4,00	31,09	759,3	0,864	3,0	32,32	820,4	0,898
39	4,00	34,09	912,9	0,874	3,0	35,32	979,8	0,906
42	4,50	36,48	1045,2	0,869	4,0	37,09	1080,6	0,883
45	4,50	39,48	1224,1	0,877	4,0	40,09	1262,5	0,891
48	5,00	41,87	1376,6	0,872	4,0	43,09	1458,5	0,898
52	5,00	45,87	1652,2	0,882	4,0	47,09	1741,8	0,906
56	5,50	49,25	1905,2	0,880	4,0	51,09	2050,3	0,912
60	5,50	53,25	2227,3	0,888	4,0	55,09	2383,9	0,918
64	6,00	56,64	2519,6	0,885	4,0	59,09	2742,6	0,923
The values in the shaded lines are recommended.								

Copyright International Organization for Standardization
© ISO 2012 – All rights reserved

D.4.2 Sketch of typical bolt arrangement

Figure D.1 is an enlargement of Figure C.3, viewed from top, with two typical arrangements: without or with top flange.

IMPORTANT — Figure D.1 shows the case of a ballast keel fitted directly on the hull canoe body. The dimensions of the backing plate should be as recommended in D.5. If the bottom is in sandwich, D.5 requires transition to single skin for the keel. In that case, care shall be taken to have the backing plate bearing on single-skin laminate. If it were to be fitted on a stub keel or tuck, the backing plate would not go so far abeam as to stay within the internal limits of stub/skeg.

CAUTION — The keel flange has a limited stiffness and it should be checked that the bolt traction can effectively be transferred from the keel fin to the structure. In Figure D.1 b1), the bolts of the aft floor and front bolts of front floor should not be considered in the calculation unless there is a radius or a slope between the keel fin and the flange ensuring they are rigidly connected.

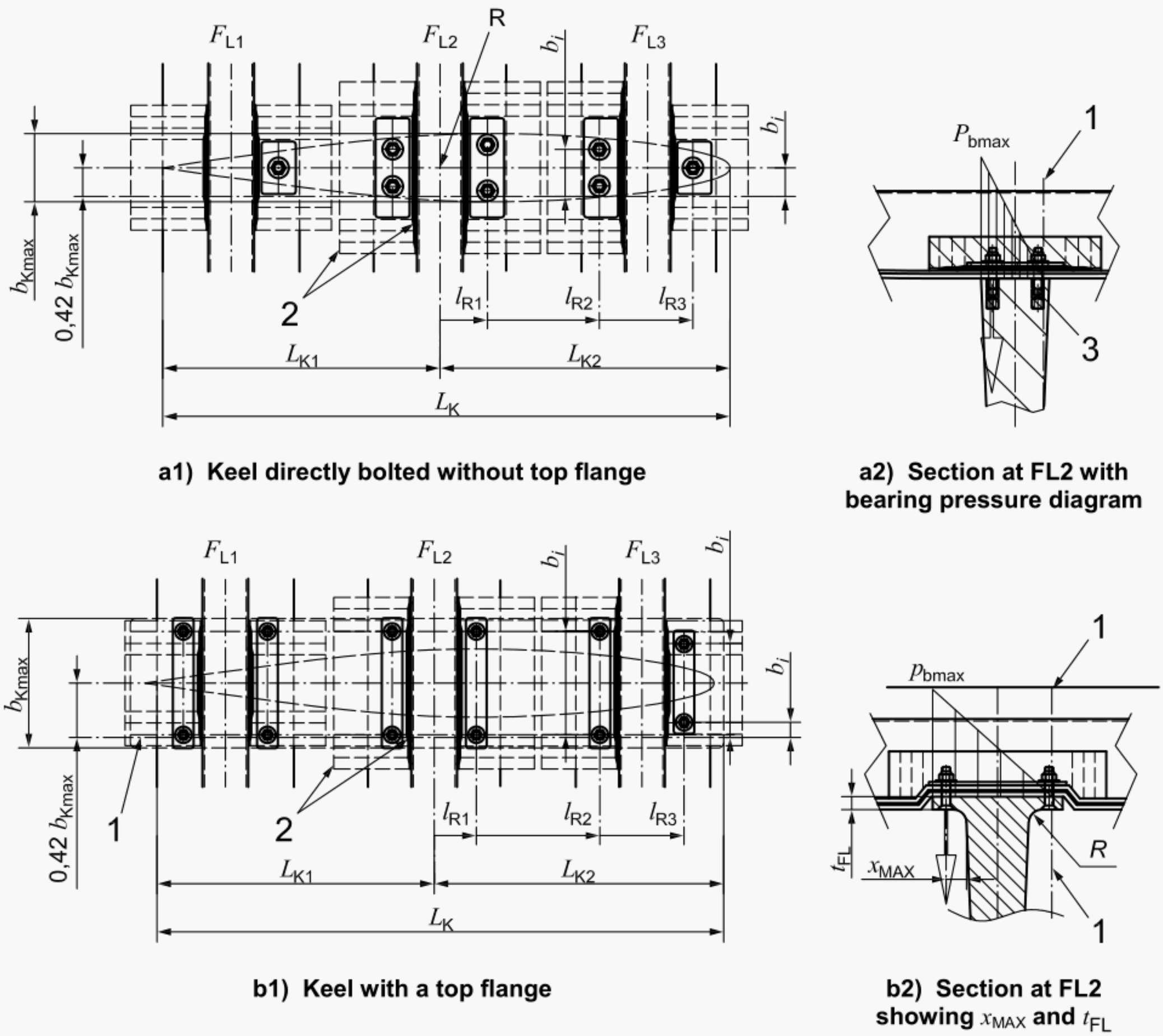

Key

1 hinge bearing line parallel to centreline at $0{,}42 b_{Kmax}$ both for foil shape or with a top flange (see D.4.3)

2 web lapping tray

3 steel insert in cast iron ballast

Figure D.1 — Keel bolts

Copyright International Organization for Standardization
© ISO 2012 – All rights reserved

D.4.3 Position of the transverse hinge point of the ballast

As shown is Figure D.1, the hinge line of the bolted ballast is considered as being located at a distance $0{,}42 b_{\text{Kmax}}$ from the centreline, which is about the CG of the lower profile line, where $b_{\text{K max}}$ (mm) is the maximal width of the top chord of the keel or the top of the flange, b_{Fmax}.

For simplicity, this value is also used for keels with a top flange [see Figure D.1 b1)].

D.4.4 Bolt diameter determination under load case 1

D.4.4.1 Bolts with identical diameter and material under load case 1

Where all the keel bolts are of the same diameter and material, the following equation gives the required neck diameter:

$$d_{\text{neck}} = \sqrt{\frac{1273 \times b_{i\text{max}} \times M_{1.1}}{\sigma_{\text{dbolt}} \times \sum b_i^2}} \tag{D.5}$$

expressed in millimetres (mm) as the required neck diameter of bolts (bottom of the thread)

where

$M_{1.1}$ is the design bending moment, in newton metres (N·m), given in 7.2;

b_i is the distance, in millimetres (mm), between the hinge bearing line and each bolt axis (see Figure D.1);

$\sum b_i^2$ is the sum of all b_i — in each row, it is not only the farthest bolt from hinge line but all bolts; however bolts not "on the opposite side" of the hinge line, i.e. the leeward ones in case of knockdown, having negative b_i, need not be considered;

$b_{i\text{max}}$ is the greatest of the b_i values, in millimetres (mm);

σ_{dbolt} is the design stress of the bolt, in newtons per square millimetre (N/mm^2) as defined in Clause 5.

NOTE 1 This calculation considers that the bottom and floors are stiff and deflect together with the profile around the hinge line.

NOTE 2 The background to Equation (D.5) is presented in

$$d_{\text{neck}} = \sqrt{\frac{1000 M_{1.1}}{\frac{\pi}{4}\sigma_{\text{d}} \sum b_i}} = \sqrt{\frac{1273 M_{1.1}}{\sigma_{\text{d}} \sum b_i}}$$

where the moment is multiplied by 1 000 in order to have the bending moment in newtons per millimetre; $M_{1.1}$ is expressed in newton metres.

D.4.4.2 Bolts with different diameters under load case 1

Where not all keel bolts are of the same diameter, but are made of the same material, the following equation shall be fulfilled for each bolt:

$$\sigma_i = \frac{1273 \times b_i \times M_{I.1}}{\sum \left(b_i^2 \times d_{i\text{neck}}^2 \right)} \le \sigma_{\text{dbolt}} \quad \text{N/mm}^2 \tag{D.6}$$

Copyright International Organization for Standardization

where

b_i is the distance, in millimetres (mm), between the hinge bearing line and each bolt axis (see Figure D.1);

$d_{i\text{neck}}$ is the neck diameter (bottom of the thread) of the bolt considered (i = 1,2, etc.), in millimetres;

$\sum\left(b_i^2 \times d_{i\text{neck}}^2\right)$ is the sum of the product of b_i and $d_{i\text{neck}}$ squared for each bolt, in mm^4.

D.4.4.3 Force on the bolts under load case 1

Table D.2 requires knowledge of the force on the bolts. It is derived from Equation (D.6) as follows:

$$F_{i\text{bolt}} = \sigma_i \times \frac{\pi}{4} \times d_i^2 = \frac{1000 \times M_{1.1} \times b_i \times d_i^2}{\sum\left(b_i^2 \times d_{i\text{neck}}^2\right)} \quad \text{(D.7)}$$

expressed in newtons (N)

or

$$F_{i\text{bolt}} = \frac{1000 \times M_{1.1} \times b_i}{\sum b_i^2} \quad \text{(D.8)}$$

expressed in newtons (N), and which is the simplified equation if all bolts have the same diameter.

D.4.5 Analysis of bolted ballast keels under load case 4

D.4.5.1 Determination of bolt diameter under load case 4 (longitudinal grounding)

The moment, $M_{4.1.\text{T}}$, taken by the bolts forward of the rotation point R defined in C.2.7.2, is the part of the total moment, $M_{4.1}$, taken by the bolts loaded in traction, the rest of the moment being taken in compression by the floors aft of R.

D.4.5.1.1 Bolts with identical diameter and material under load case 4

$$d_{\text{neck}} = \sqrt{\frac{1\,273 \times l_{\text{R}i\text{max}} \times M_{4.1.\text{T}}}{\sigma_{\text{dbolt}} \times \sum l_{\text{R}i}^2}} \quad \text{(D.9)}$$

expressed in millimetres (mm) as the required neck diameter for identical bolts of the same material

where

$M_{4.1.\text{T}} = M_{4.1}\dfrac{L_{\text{K2}}}{L_{\text{K}}}$ is the design moment, in newton metres (N·m) on bolts in traction in load case 4;

L_{K}, L_{K2} are, respectively, the length of the top keel chord and its part forward of R (see Figure D.1);

$l_{\text{R}i}$ is the distance forward of R of each bolt axis (see Figure D.1);

$\sum l_{\text{R}i}^2$ is the sum of all $l_{\text{R}i}$, with every bolt forward of R being considered, whether single or in a row;

Copyright International Organization for Standardization
© ISO 2012 – All rights reserved

l_{Rimax} is the greatest of the l_{Ri} values, in millimetres (mm);

σ_{dbolt} is the design stress, in newtons per square millimetre (N/mm^2), of the bolt defined in Clause 5.

D.4.5.1.2 Bolts with different diameters under load case 4

$$\sigma_i = \frac{1\,273 \times l_{2i} \times M_{4.1.T}}{\sum l_{Ri}^2 \times d_{ineck}^2} \leq \sigma_{dbolt} \tag{D.10}$$

expressed in newtons per square millimetre (N/mm^2) as the stress in each bolt,

where

d_{ineck} is the neck diameter (bottom of the thread) of the bolt considered (i = 1, 2, etc.) (mm);

$\sum l_{Ri}^2 \times d_{ineck}^2$ is the sum of the product of l_{Ri} and d_{ineck} squared for each bolt (mm^4).

D.4.6 Final determination of bolt diameter

The bolt nominal diameter finally chosen shall, for each location, correspond to the greatest required neck diameter for load cases 1 and 4.

The bolt final nominal diameter shall not be less than

— 10 mm for design category C and D, and

— 12 mm for design category A and B.

Table D.1 gives information on the relation between neck and nominal diameter according to the pitch.

CAUTION — This determination is only valid if the bolts are able to efficiently transmit their force, which means that the relevant requirements of D.5 shall be fulfilled.

D.4.7 Bearing pressure on top of ballast keel

When the craft heels, the equilibrium around the hinge and bolt strength results in bearing pressure both on the keel top and the craft's bottom [see pressure diagram in Figure D.1 a2) or b2)].

$$p_{bmax} = \frac{m_{KEEL} \times g \times a}{0{,}28 \times L_K \times b_{Kmax}^2} \times 10^{-6} \tag{D.11}$$

expressed in newtons per square millimetre (N/mm^2) as the maximum bearing pressure

with all dimensions expressed in metres and m_{KEEL} in kilograms (kg) and where

p_{bmax} is the maximum bearing pressure (N/mm^2), which shall not be greater than the design bearing stress σ_{db} of the materials under pressure (keel top, hull or faying material), whichever is the lesser (see Clause 5);

L_K is the length (mm) of the top chord of the keel or top of flange L_F (see Figure D.1);

b_{Kmax} is the maximal width (mm) of the top chord of the keel or top of flange b_{Fmax}.

Copyright International Organization for Standardization © ISO 2012 – All rights reserved

As the surfaces of the top of the ballast keel and the bottom of the hull or keel skeg cannot perfectly match in practice, an intermediate layer of gasketing material or jointing compound is usually placed between them. In theory, the average pressure shall be as defined in Equation (D.11).

NOTE When using a “soft” gasketing material at places, this induces, in places where the keel is in contact with the hull, a design pressure higher than the average pressure. In practice, when the surfaces are not too “wavy”, a gasketing material will suffice; otherwise a reinforced compound paste (resin plus 3D random fibres) will probably be needed.

For wooden craft, the wood crushing strength is often lower than the maximal bearing pressure, in which case the wood will often need to be reinforced by a saturation of pure and/or reinforced epoxy resin (2D or 3D laminate).

According to ISO 12215-5:2008, Annex E, the resistance in compression, σ_{uc}, of wood is $0{,}073\rho$ for softwoods and $0{,}070\rho$ for hardwoods, where ρ is the wood density (kg/m^3). According to Table 3, Footnote b, and in the absence of specific tests of wood or plywood, σ_{db} may be taken as 1,8 times σ_d. Therefore for the design bearing strength of wood may be taken as $0{,}33 \times 1{,}8\sigma_{uc} = 1{,}06\sigma_{uc}$. Wood or plywood saturated with epoxy and/or covered with FRP obviously has a higher bearing design stress.

For lead keels, the ultimate compression of lead, even alloyed with antimony, is very low, so care shall be taken to avoid a bearing design pressure greater than the lead design compressive strength. Lead is often reinforced by a steel backbone and upper flange (see D.3.3).

D.5 Local details

D.5.1 Validity of calculations

The above calculations are only valid if all the bolts are correctly and evenly loaded and are able to transmit their load to the rest of the craft's structure. This condition is considered fulfilled if the requirements of Table D.2 are met.

D.5.2 Use of Table D.2 to assess backing plate dimensions, hull thickness and details of connection to the structure

Table D.2 gives details of established practice. The dimensioning equations given in that table for backing plate and shell are semi-empirical and are based partly on simplified strength of material formulations and partly on established practice. FRP in this context means largely E-glass–based laminates.

The equations apply to two commonly found configurations:

— bolts located within 2,5 bolt diameters of a stiffener web, with the bolt passing through the stiffener bonding angle, bottom shell and web lapping tray (where fitted), which is the recommended method (see Figure D.3);

— bolts located further than 2,5 bolt diameters from a stiffener web, with either one bolt or multiple bolts per backing plate, such as those that can be found at the leading or trailing edge of the keel on the centreline.

The function of the backing plate and hull shell is to transfer the keel loads to the supporting framework of floors and girders. The first configuration is considered to be more effective in this regard and hence hull shell thickness requirements are less onerous for some materials.

These equations represent one approach only, namely medium thick backing plate with thick shell. A number of recorded failures (principally of the second configuration) have been associated with too thin a shell and, consequently, a conservative approach has been adopted in this annex.

An alternative is to use a thicker backing plate with a thinner shell. However, as reliable simple equations do not exist for making rational “trade-offs” between backing plate and shell thickness, no guidance formulae are presented within this annex.

Copyright International Organization for Standardization
© ISO 2012 – All rights reserved

Nevertheless, when using shells thinner than those prescribed here, it is recommended that the laminate not be less than required by D.5.2.4. In such cases, the thickness should be obtained using ISO 12215-5, including the factor k_{SLS} (see ISO 12215-5:2008, 7.8). It is also remarked that requirements of D.5.2.4 concern pressure loading with a 1,8 multiplying factor — not associated with keel loads as such.

In respect of the keel and bolts, the hull bottom shall be single skin laminate. If the hull bottom is of sandwich construction outside the area shown in Figure D.2, the transition into single skin shall be progressive, in accordance with D.5.3.1, and according to ISO 12215-5 and the best practice outlined in ISO 12215-6. The hull plating thickness required in rows 1 or 3 of Table D.2 shall extend 100 mm forward and aft of the foremost and aftermost keel floors and 100 mm outboard of the outermost keel bolt on each side.

IMPORTANT — Where bolts from metals other than steel are used, e.g. nickel, aluminium, Monel, etc., it is recommended that, to avoid corrosion, backing plates and friction washers be made from the same metal or compatible metal. In that case, the thickness and dimensions of the backing plate shall be according to the strength (or stiffness, if t_{BP2} has been used) of the used metal, and the coefficients for steel shall be used if the metal is as strong or stronger than steel.

CAUTION —The diameter used in the row titles and equations of Table D.2 (including distance $2{,}5d$) is, for each bolt, the nominal *required* diameter, d_{req}, calculated as 1,18 times the neck diameter required either for load case 1 or load case 4. If a greater nominal diameter is chosen, the value of d taken in Table D.2 need not be greater than d_{req}. Table D.3 gives some pre-calculated values of the requirements of Table D.2.

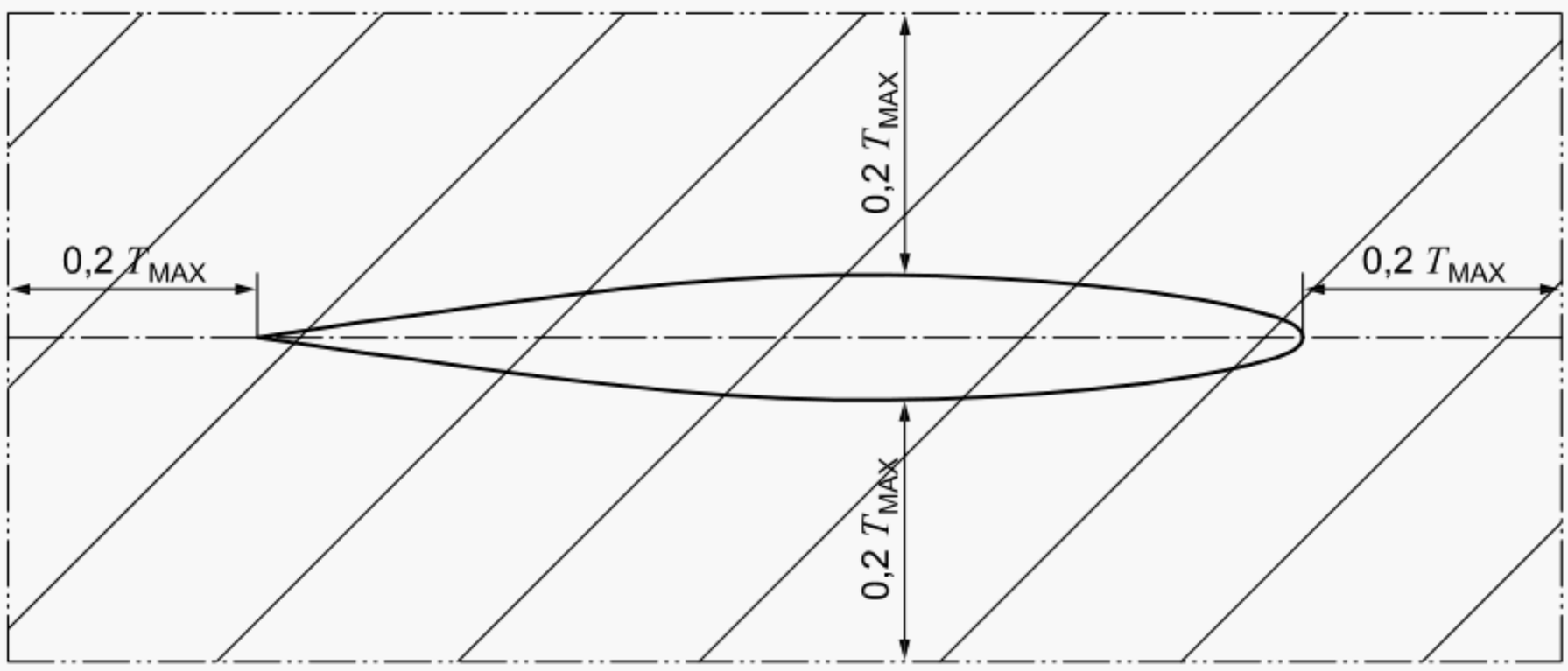

Figure D.2 — Area with raised bottom pressure in respect of ballast keel

D.5.2.1 Use of Table D.2 — *General requirements for all bolt configurations*

To ensure a thorough transmission of loads from the bolt to the structure, the minimum backing plate diameter D_{BPmin}, and the hull thickness, t_{H1}, in relation to the bolts and backing plate diameter shall be a function of the downwards force, F_{bolt} (N) transmitted by the bolt. If the hull bottom is in sandwich construction outside of the keel area, the backing plate shall not bear on a sandwich laminate area, to avoid the risk of punching the inside skin.

NOTE For simplicity, the backing plate is considered circular, but in practice it is often preferable that it be square or rectangular and that it connect two bolts in a row (see the first row of Table D.2).

Copyright International Organization for Standardization
© ISO 2012 – All rights reserved

D.5.2.2 Use of Table D.2 — *Requirements for bolts within* $2{,}5d_{\text{req}}$ *of stiffener web* (and connection to the adjacent structure) *(FRP only)*

a) **Case of local lapping tray tabbed on hull bottom below backing plate and on stiffener web**

This row of the table gives equations for the dimensions (thickness of the lapping tray t_{WLT}, faying area A, height h_{LT}) from its width w_{BP}. In order to have a tray that is not too thick, w_{BP} is taken at its maximum allowed value of 6 d_{req} and not just D_{BPmin}. If an L-shaped laminated web tray is used to connect the bolt to the floor or girder, it shall extend outside the limits of the backing plate, with ply staggering as noted in D.5.3.1 or ISO 12215-6. It also gives the required backing plate minimum thickness made out of steel t_{BP1}. See Figure D.3 a).

b) **Case of prefabricated moulded tray**

The thickness of the lapping tray, t_{WLT}, is the total thickness of the tray moulding in relation to the backing plate, i.e. nominal plus eventual reinforcement below the backing plate and in the stiffener web. The value of area A is therefore irrelevant. The height of the stiffener shall be at least h_{LT}, but it shall be checked that the stiffener dimensions fulfil the requirements for floors given in Annex C. See Figure D.3 b).

D.5.2.3 Use of Table D.2 — *Requirements for bolts farther than* $2{,}5d_{\text{req}}$ *from stiffener web (FRP only)*

Locating the bolts farther than $2{,}5d_{\text{req}}$ from the stiffener web increases the flexural work for the plating and backing plate and therefore needs an increase in hull thickness and backing plate thickness.

D.5.2.4 Use of Table D.2 — *Shell plating in relation to keel and within a specified zone*

The thickness and/or structural arrangement of the bottom shell or keel skeg plating in an area located longitudinally and transversally within 0,2 T_{MAX} of the ballast keel junction with the hull shall be such that the design pressure of the plating is 180 % of the bottom pressure defined in ISO 12215-5, which can be achieved either by extra thickness or with closer spacing of stiffeners. This area is schematized hatched in Figure D.2, where T_{MAX} is the maximum draft of the craft as defined in ISO 8666. A simplified equation for the plating thickness is given in Table D.2. This is generally within a few percent of the value defined in ISO 12215-5 from which it is derived.

D.5.2.5 Use of Table D.2 — *Final and additional requirements*

This section of the table gives final dispositions and additional requirements to the other cells of Table D.2

NOTE In the absence of data, Sections 2 and 3 of Table D.2 only apply to FRP construction.

Table D.2 — Detailed "established practice" requirements for bolt detail arrangements

Item	Requirements	Explanations and data
1. General requirement for all bolt configurations (see D.5.2.1)		
Backing plate diameter D_{BP} (mm)	$D_{\text{BPmin}} = K_{\text{B1}} \times F_{\text{bolt}}^{0{,}5}$	K_{B1} = substrate-dependent coefficient: 0,4 (FRP and wood), 0,3 (metals) The requirement for $D_{\text{BP min}}$ is between $4{,}2d_{\text{req}}$ and $5{,}2d_{\text{req}}$ and the web radius may not allow the bolt to be within $2d_{\text{req}}$ or $2{,}5d_{\text{req}}$ from the web with a circular backing plate. To solve this problem, a square plate with a side, $W_{\text{S}} = 0{,}9D_{\text{BP}}$, or rectangular plate of the same area may be used (see Table D.3 and Figure D.3). For two bolts on a continuous backing plate, the dimension of the plate in the direction connecting the bolts shall be $\geq 2D_{\text{BP}}$, and its area shall be $\geq 1{,}6D_{\text{BP}}^{2}$.

Copyright International Organization for Standardization
© ISO 2012 – All rights reserved

Table D.2 (*continued*)

Item	Requirements	Explanations and data
Hull thickness 1 in respect of bolts t_{H1} (mm) Single-skin laminate required in respect of keel and bolts (see D.5.2)	$t_{H1} = \frac{F_{bolt}}{K_{B2} \times d_{req}}$ Where d_{req} is the nominal bolt diameter required by equation D.5 (load case1) or D.4.4.2 (load case 4) using $d_{req} = 1{,}18 \times d_{neck}$	$K_{B2} = 110$ (FRP), 17 (wood), 300 (steel, or stronger metal), 210 (aluminium alloy) For all chopped strand mat layups, the hull thickness shall be increased by 10 % and for combination mat layups by 5%. The minimum thickness, t_{Hmin}, given in 4 of this table shall also be satisfied. Where the bolt has a relation with the stiffener bonding angle and web lapping tray, the thickness requirement, t_{H1}, applies to the total thickness parallel to the hull, i.e. shell + bonding angle + web lapping tray or tray moulding. Where there is a web lapping tray, the thickness requirement t_{H1} may be reduced by 15 %, provided the faying area of the lapping tray on to the web and its thickness meet the requirement below.
2. Requirements for bolts within $2{,}5d_{req}$ **of stiffener web *and* with FRP lapping tray located under backing plate, lapping onto stiffener web (FRP only)** (see D.5.2.2)		
Thickness of web lapping tray t_{WLT} (mm)	$t_{WLT} = 4 \times \left(\frac{F_{bolt}}{\sigma_{utWLT} \times w_{BP}} \right)$	That part of the lapping tray or tray moulding transferring the bolt force to the stiffener web is considered the same as the width of the backing plate, w_{BP} (mm), parallel to the stiffener axis. Backing plate width w_{BP} shall not be taken greater than $6d_{req}$ for a single bolt ($12d_{req}$ for twin bolts). NOTE Index "WLT" for the stress signifies web lapping tray laminate material.
Faying (contact) area for web laminate tray A (cm²)	$A = \frac{F_{bolt}}{500}$	The height of tray above stiffener bonding angle shall be $h_{LT} = 100\ A/w_{BP}$ (mm). This requirement is to ensure that the contact area is sufficient to transmit the bolt force by shear bonding. This requirement is not relevant for pre moulded top hat with horizontal flanges glued to hull.
Thickness 1 of steel backing plate t_{BP1} (mm)	$t_{BP1} = 0{,}1 \times \left(F_{bolt} \times d_{req} \right)^{0{,}33}$	d_{req} is the nominal bolt diameter required by D.4.4 (load case1) or D.4.5 (load case 4) using $d_{req} = 1{,}18 \times d_{neck}$ (actual d may be greater than d_{req}).
3. Requirements for bolts located farther than $2{,}5d_{req}$ **from a stiffener web (FRP only)**		
Hull thickness 2 in respect of bolts t_{H2} (mm) Single skin laminate required in respect of keel and bolts (see D.5.2)	$t_{H2} = K_{B3} \times \left(\frac{F_{bolt}}{\sigma_{uf\,hull}} \right)^{0{,}5}$ One bolt per backing plate	K_{B3} = 1,8 for FRP (with $\sigma_{uf\,hull}$ = 180N/mm²) in the case of a single bolt on one backing plate. Where multiple bolts are used on a single backing plate, the hull thickness may be taken as the mean of this value and the preceding equation. The minimum thickness t_{Hmin} given in cell 4 of this table shall also be satisfied.
Backing plate thickness 2 t_{BP2} (mm)	$t_{BP2} = 0{,}15 \times \left(F_{bolt} \times d_{req} \right)^{0}$	This is a backing plate stiffness driven criterion *(edge lifting and load transfer)*. This explains the exponent of 0,33 and that the backing plate strength is not an input. Only the bolt strength is used because this affects the loading.

Copyright International Organization for Standardization
© ISO 2012 – All rights reserved

Table D.2 (*continued*)

4. Minimum hull thickness in way of bolts and within zone specified in D.5.2.4
$t_{Hmin} = 0{,}06 b_s^{0{,}95} A_R (1 - 0{,}25 A_R) \frac{m_{LDC}^{0{,}175}}{\sigma_d^{0{,}5}}$ where A_R is the panel aspect ratio (not less than 1,0 nor greater than 2,0). σ_d is the design stress, $\sigma_d = 0{,}5\sigma_{UF}$ (FRP and wood), $\sigma_d = 0{,}9\sigma_y$ (metals). b_s is the distance (mm) between adjacent stiffeners, floor or girder webs, whichever is the shorter distance, but not to be taken less than 350 + 5 L_{WL} (FRP) or 250 + 5 L_{WL} (other materials). NOTE Hull thickness t_{Hmin} corresponds to the requirements of ISO 12215-5 around the keel area; idem for the values of design stress, σ_d, above, which differ from the σ_d elsewhere in this part of ISO 12215.
5. Final and additional requirements
The bolt force shall not be taken less than 50 % of the bolt force experienced by the most heavily loaded bolt for the load case in question. The backing plate diameter shall never be taken less than $3d_{req}$ of the bolt in question. The formulae given in this table may be used for non E-glass–based composites and for (evaluation level) EL-a properties, with the limitation that these may not be taken as more than 25 % greater than those given by EL-b default equations of ISO 12215-5:2008, Annex C, for glass laminates of the same fibre content by mass. The bolt forces shall be taken from load cases 1 and 4, with the scantlings determined from whichever gives the greatest values. Bolt forces from load case 4 (only) may be multiplied by a factor of 0,67. This factor allows for higher stress factors, since load case 4 is considered to be less likely to occur than load case 1.

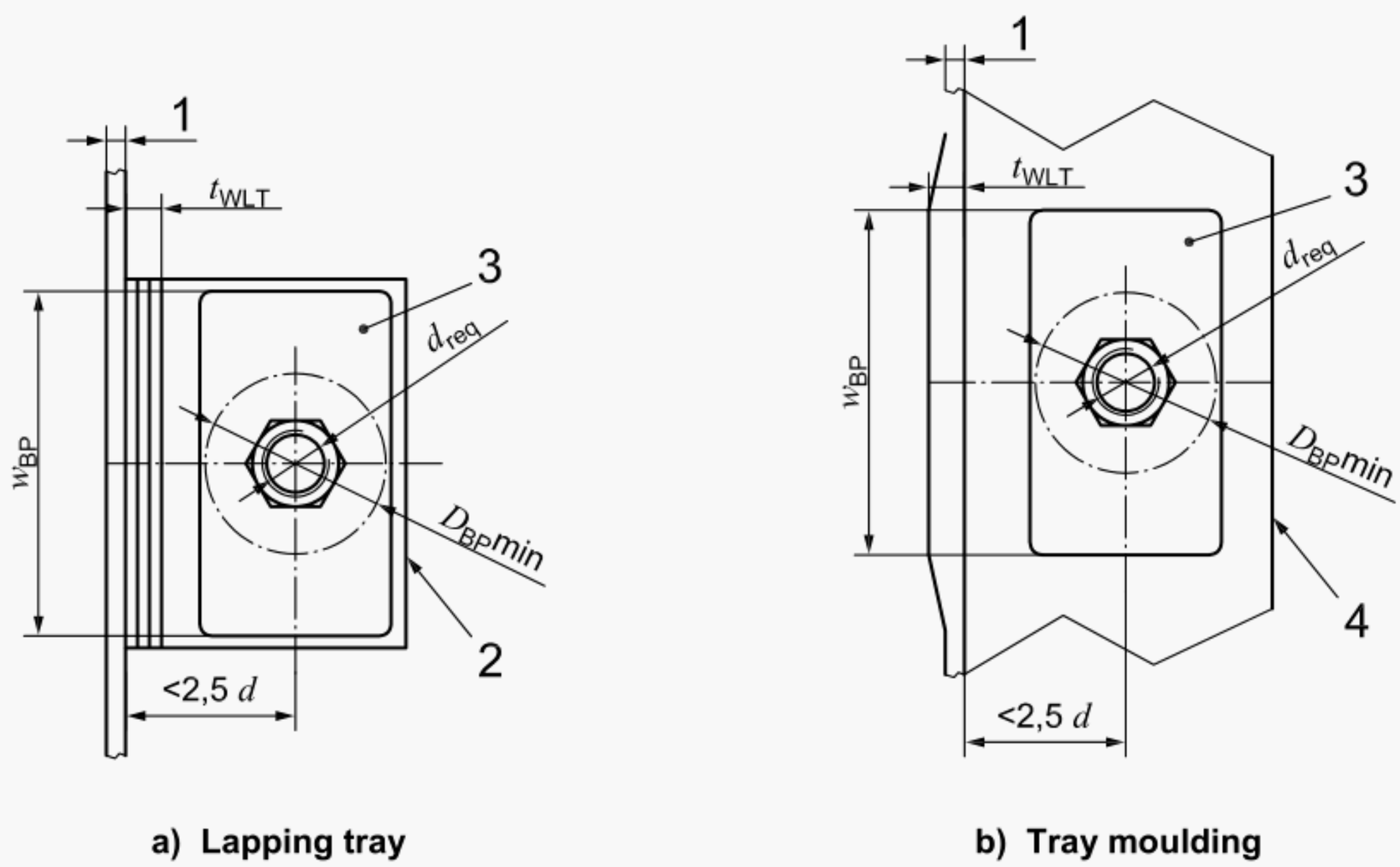

Key

1 web thickness away from bolt according to Annex C

2 lapping tray limits

3 actual dimensions of the backing plate

4 limit of the tray moulding flange

Figure D.3 — Dimensions of Table D.2

Copyright International Organization for Standardization
© ISO 2012 – All rights reserved

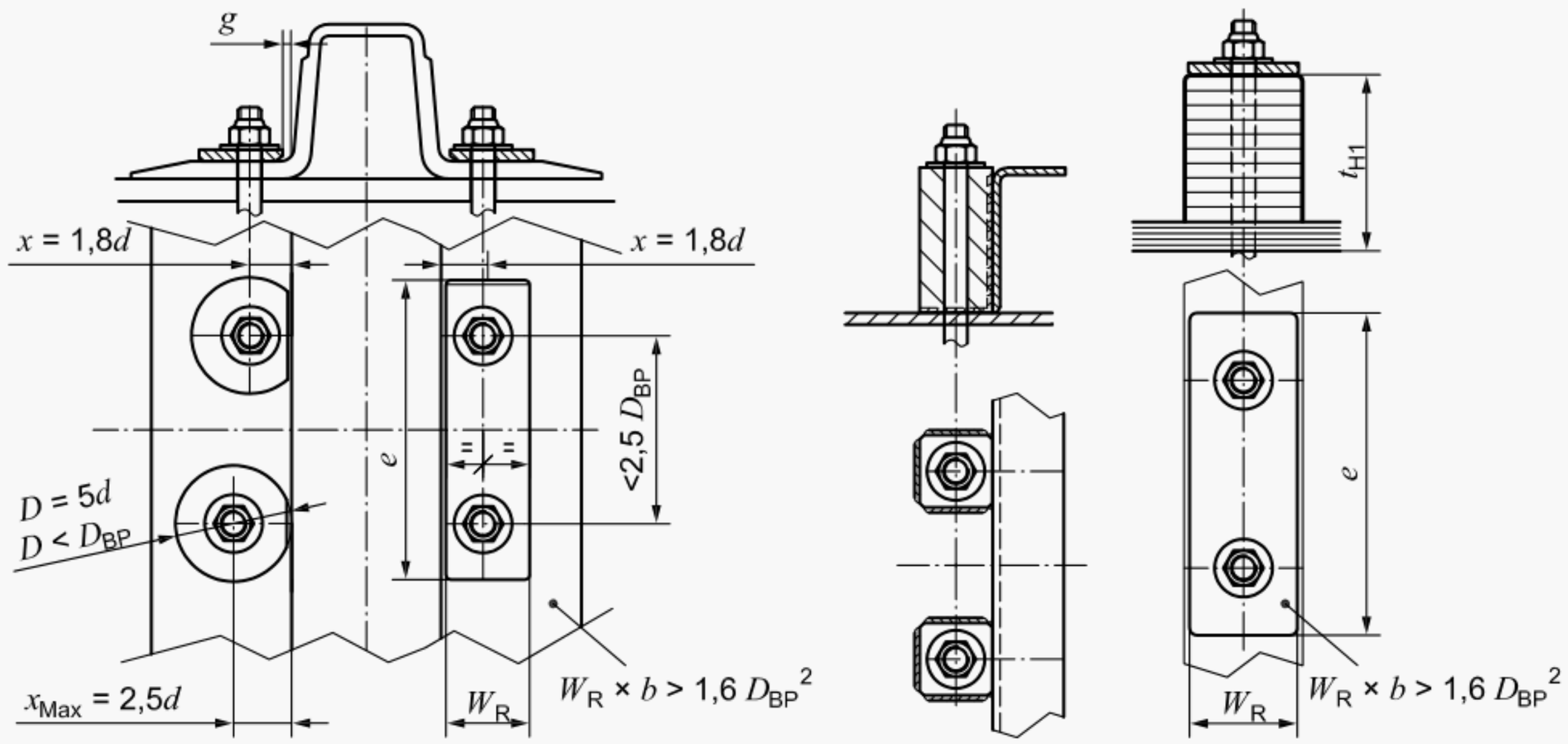

a) FRP top hat stiffener **b) Metal stiffener** **b) Wood stiffener**

Figure D.4 — Examples of bolted connections

Figure D.4 a) shows an FRP top hat connected on the left to a bolt with circular backing plates. The distance between the bolt centre and the stiffener side is recommended to be not greater than 2,5d, preferably less. On the top left the centre of bolt, a distance of 1,8d is obtained by cutting the edge of the inner side. On the bottom left, the maximum value of 2,5d is shown with a nearly fully circular backing plate. The right side of Figure D.3 a) shows the preferred type of back plate: a rectangular back plate, with rounded corners, and slightly non-symmetric in order to have the bolt closer to the top hat (here 1,8d also). Its area shall be at least twice that of two circular back plates of diameter D, therefore a x b > 1,6D^2. The gap, g, between the edge of the backing plate and the top hat web shall be kept as small as possible; a gap no more than 2 to 3 mm is a recommended value. Of course the edge of the backing plate shall be chamfered and rounded to avoid any risk of cutting the stiffener web.

Figure D.4 b) shows a recommended connection for metal construction (see D.5.3.3) and Figure D.4 c) shows a recommended connection for wooden construction (see D.5.3.4).

D.5.2.6 Use of Table D.3 — Example of pre-calculated values from Table D.2 for GRP

To facilitate the use and understanding of the requirements of Table D.2 the values for an FRP laminate with a glass content Ψ= 0,38 have been pre-calculated in Table D.3. The mechanical properties have been taken from the tables of ISO 12215-5:2008, Annex C, with Evaluation level EL-b. The bolts are A4 80 stainless steel.

Table D.3 calculates (in grey) the minimal dimensions of backing plates and t_{H1}. As following minimal backing plate width would lead to thick tray laminate, w_{BP} is taken at its maximum allowed value of 6d_{req}. For example, a 20 mm d_{req} in load case 1 corresponds to a tray laminate width per bolt of w_{BP} = 120 mm and a tray laminate thickness of 12,5 mm.

Copyright International Organization for Standardization

Table D.3 — Pre-calculated data for dimensions around bolts — Values of Table D.2

Bolt material		SS bolts A4 80									Load case 1				Load case 4		
σ_y N/mm²	σ_u N/mm²		σ_d N/mm²								k_{MAT} 1	k_{LC} 1	σ_d N/mm²		k_{MAT} 1	k_{LC} 1	σ_d N/mm²
400	800		201								0,75	0,67	200		0,75	1	300
Bolt data				Minimal backing plate dimensions, all cases							If within $2{,}5d_{req}$ of stiffener web					Outside of $2{,}5d_{req}$ calculation for	
				Circular			Square	Rectangle		Hull	t_{WLT} calculation for $\sigma_{ut\ WLT}$ =				120[a]		
d_{req}	P normal	d_{neck} req.	F_{bolt} $0{,}375\sigma_u$	D_{BP}	D_{BP}/d [a]	Area	$w_S = 0{,}9D$	$w_R \times e$: $w_R \geq$	$e \geq$	Thickness t_{H1}	$6d_{req}$	A faying	$h_{LT} = 100A/w$	t_{WLT}	t_{BP1}	σ_{ufhull} = t_{H2}	180[b] t_{BP2}
mm	mm	mm	N	mm		cm²	mm	mm	mm	mm	mm	cm²	mm	mm	mm	mm	mm
Calculations for GRP and load case 1										Data cells shaded grey		k_{B1} =	0,4	k_{B2} =	110	k_{B3} =	1,8
12	1,75	9,9	15 247	49	4,1	19	44	44	86	11,6	72	30	42	7,1	6	16,6	9
14	2,0	11,5	20 938	58	4,1	26	52	52	101	13,6	84	42	50	8,3	7	19,4	10
16	2,0	13,5	28 820	68	4,2	36	61	61	119	16,4	96	58	60	10,0	8	22,8	12
20	2,5	16,9	45 032	85	4,2	57	76	76	148	20,5	120	90	75	12,5	10	28,5	14
24	3,0	20,3	64 846	102	4,2	81	92	92	178	24,6	144	130	90	15,0	12	34,2	17
27	4,0	22,1	76 656	111	4,1	96	100	100	193	25,8	162	153	95	15,8	13	37,1	19
Calculations for GRP and load case 4										Data cells shaded grey		k_{B1} =	0,4	k_{B2} =	110	k_{B3} =	1,8
12	1,75	9,9	22 873	60	5,0	29	54	54	106	17,3	72	46	64	10,6	6	20,3	10
14	2,0	11,5	31 410	71	5,1	39	64	64	124	20,4	84	63	75	12,5	8	23,8	11
16	2,0	13,5	43 235	83	5,2	54	75	75	145	24,6	96	86	90	15,0	9	27,9	13
20	2,5	16,9	67 554	104	5,2	85	94	94	181	30,7	120	135	113	18,8	11	34,9	17
24	3,0	20,3	97 278	125	5,2	122	112	112	218	36,8	144	195	135	22,5	13	41,8	20
27	4,0	22,1	114 996	136	5,0	145	122	122	237	38,7	162	230	142	23,7	15	45,5	22

a For other values of $\sigma_{ut\ WLT}$, multiply t_{WLT} by $120/\sigma_{ut\ WLT}$.

b For other values of $\sigma_{uf\ hull}$, multiply t_{WLT} by $180/\sigma_{uf\ hull}$.

© ISO 2012 – All rights reserved

D.5.3 Transfer of bolt load to the structure and connexion details

D.5.3.1 Transfer of bolt loads

The minimum thickness of the backing plate corresponds to a stiffness requirement to transfer the bolt load (force and moment) to the stiffener, thereby avoiding flexure of the bottom plating. This stiffness may be achieved by other means (flanges, stiffeners, etc.) provided the same goal is achieved.

The hull thickness in respect of the bolts comprises the hull itself — with its eventual reinforcements or overlaps — plus the floor tabbing or laminated flange. For wooden hulls, the floor may be added to hull thickness.

The use of backing plates does not proscribe the use of washers between bolt head or nut and the backing plate. These washers are necessary to reduce friction when tightening as recommended in B.5.

It is recommended that backing plates have rounded corners and a chamfered bottom, in order that the hull bottom not be cut and particularly to avoid damage to the fillet connection between the horizontal and vertical parts of the tabbing.

The bolts shall be provided with a means of ensuring that they will not loosen.

EXAMPLE Lock nut, grower washer, bent tab, resin.

Unless specifically engineered, the bolts connecting FRP top hats shall not be bolted through the top of the hat, but through the flange or tabbing.

The load from the bolt shall be efficiently transferred to the flange of the floor or girder; this requirement is considered to have been met by conformance with the requirements of D.5.2 and Table D.2.

Where the floor or floor system is made with a pre-laminated moulded tray connected to the hull bottom by glue or putty, the latter shall be able to support without surpassing its design stress the compression or preload of the bolts, in addition to its shear stress.

For wooden craft, gluing is often sufficient, but other transmission means (tabbing, metal angles or top hats, etc.) may also be used.

In any case, the hull bottom thickness shall vary progressively from the general bottom thickness to those required by Table D.2, as applicable:

— for FRP, the fibre reinforcement variation shall not be more than 0,6 kg/m^2 per 25 mm;

— for metal and wood, the thickness changes shall be chamfered.

D.5.3.2 Details for FRP structures

See Table D.2.

D.5.3.3 Details for metal structures

For metal craft, welding of web may suffice when the bottom plating is thick; however, a thick tube or round or square solid section, bored for the bolt and welded on the full web height [see Figure D.3 b)], is probably one of the best methods. This welding shall be able to transmit the bolt force with a large safety margin: the ultimate load of the total of the welds is recommended to be three to five times that of the bolt. ISO 12215-6:2008 and, in particular, its Annex C, can be useful for this determination.

The proportion of web height and thickness shall be according to ISO 12215-5:2008, Tables 20 and 21, possibly multiplied by 1,2 to allow for change in design stress (see C.4).

Copyright International Organization for Standardization
© ISO 2012 – All rights reserved

D.5.3.4 Details for wooden structure

For wood, bolts are frequently bored through the floors, even if this method lowers their working section. Care shall be taken to avoid water getting into the floor. The rather low crushing strength of $0{,}0014\rho$ (N/mm^2) for wood normally means that large area backing plates are required. This crushing load may be increased significantly by resin soaking or lamination.

For wooden craft, the *Epoxy bolt* method[20] allows the load of the bolt to be taken (both upwards and downwards) by shear epoxy working — first, in shear between the bolt threads to the epoxy, then between the epoxy and the hole in the wood. With this method, the backing plate dimensions defined above might not be fully relevant, provided the shear is checked at interfaces and within epoxy. For design loads of epoxy, the values given in ISO 12215-6:2008, B.3, should be used.

An intermediate or alternative method follows the one recommended for metal structure, using wooden square or rectangular profiles bored for the bolts and connected to the floors or bulkhead by gluing and/or tabbing. Connexion methods for FRP may also be applied if tabbing is used.

Copyright International Organization for Standardization
© ISO 2012 – All rights reserved

Annex E
(informative)

Geometrical properties of some typical appendage foil shapes

E.1 Dimensions

The dimensions of rectangular or streamlined sections are

— L_f the overall length of the foil section, in millimetres (not to be confused with length of floor used elsewhere in this part of ISO 12215 and notably in Figure 1),

— b_f the overall breadth of the foil section, in millimetres, and

— t_f the wall thickness of a hollowed section, in millimetres.

See Figure E.1.

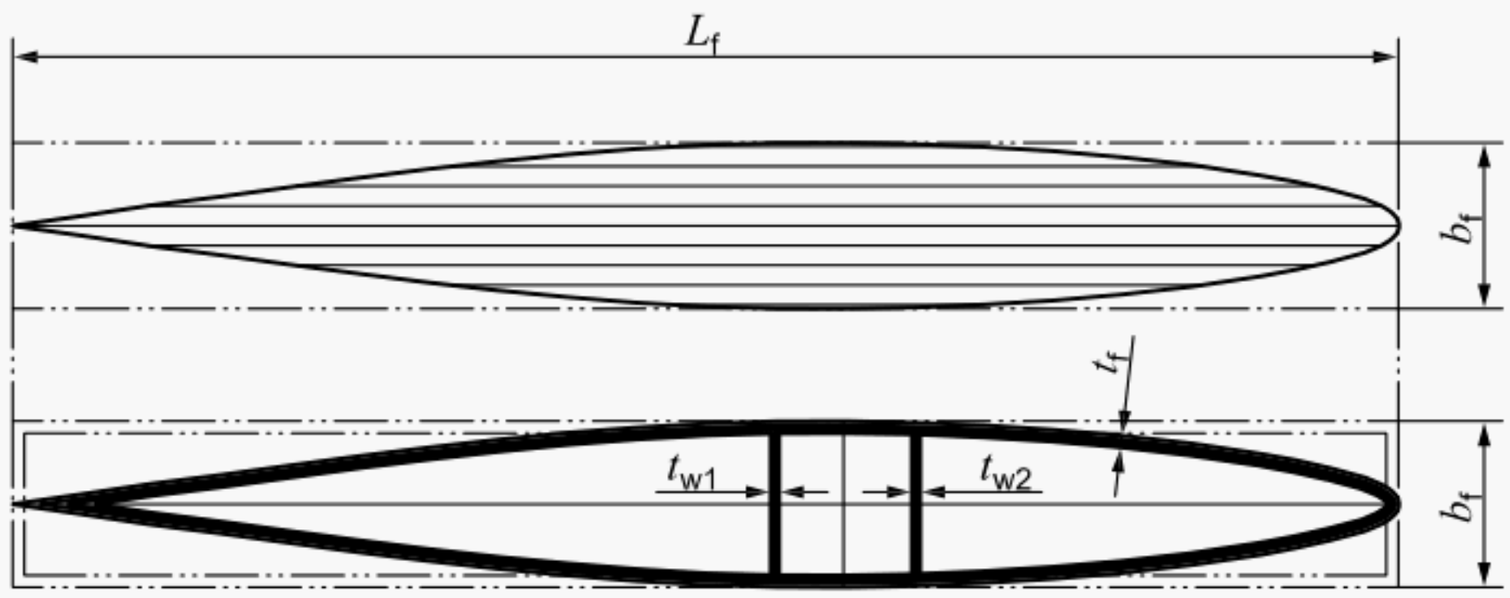

Figure E.1 — Sketch of solid and hollowed rectangular or streamlined sections

E.2 Geometric properties (bending)

E.2.1 Transverse section modulus, SM_T, and transverse second moment, I_T

$$SM_T = \frac{20 \times I_T}{b_f} \tag{E.1}$$

expressed in cubic centimetres (cm^3) as the minimum transverse section modulus

where

I_T is the transverse second moment of area (cm^4), obtained with reasonable accuracy from

$$I_T = \frac{k_f^{\,2}}{1{,}2 \times 10^5} \times L_f \times b_f^{\,3} \tag{E.2}$$

Copyright International Organization for Standardization © ISO 2012 – All rights reserved

as the transverse section second moment for solid sections (cm^4)

or

$$I_T = \frac{k_f^{\,2}}{1{,}2 \times 10^5} \times \left[L_f \times b_f^{\,3} - (L_f - 2t_f) \times (b_f - 2t_f)^3 \right] + \sum \frac{t_{wi} \times d_{wi}^{\,3}}{1{,}2 \times 10^5} \qquad \text{(E.3)}$$

as the transverse second moment for hollow sections (cm^4)

where

t_{wi} is the thickness of a vertical mounted internal web (mm);

d_{wi} is the depth (mm);

k_f is the foil shape coefficient (cm^4), whose values are given in Table E.1 for typical shapes,

$$k_f = \frac{A_F}{L_f \times b_f} \qquad \text{(E.4)}$$

where A_F is the area of the fin.

This method underestimates the geometric properties of aerofoil sections for other than very thin walls. As the wall thickness is measured perpendicular to the skin, the interior dimension will be $L_f - t_f - t_f$/tan (angle of trailing edge). For a typical 6° trailing edge slope, the interior dimension is more likely to be $L_f - 10t_f$. The transverse interior dimension will be as indicated above as the skin is perpendicular to the width. It is recommended that the equations be used for guidance only and more accurate values be obtained from CAD software.

Table E.1 — Values of k_f and k_{f1} for typical planform shapes

Fin shape/planform	Value of k_f	Value of k_{f1}
Solid rectangle	1,000	1,00
Elliptical	0,786	1,00
Diamond	0,500	1,00
Parabolic	0,667	1,00
NACA 00XX	0,664	1,16
NACA 65aXX	0,670	1,16

E.2.2 Longitudinal section modulus, SM_L, and longitudinal second moment, I_L

$$SM_L = \frac{20 \times I_L}{k_{f1} \times L_f} \qquad \text{(E.5)}$$

expressed in cubic centimetres (cm^3) as the minimum longitudinal section modulus

where k_{f1} is a factor which corrects the maximum lever as given in Table D.1. It is equal to 1 for all sections which are symmetrical about the midplane between the leading and trailing edges; 1,16 for NACA 00XX sections.

Copyright International Organization for Standardization
© ISO 2012 – All rights reserved

The longitudinal second moment, I_L, of an area can be obtained with reasonable accuracy from

$$I_L = \frac{k_f^{\,2}}{1{,}2 \times 10^5} \times b_f \times L_f^{\,3} \tag{E.6}$$

as the longitudinal second moment for solid sections (cm^4)

or

$$I_L = \frac{k_f^{\,2}}{1{,}2 \times 10^5} \times \left[b_f \times L_f^{\,3} - \left(b_f - 2t_f\right) \cdot \left(L_f - 2t_f\right)^3 \right] \tag{E.7}$$

as the longitudinal second moment for hollow sections (cm^4)

The addition effect of transverse webs may be added using $\sum t_{\mathrm{wi}} \times d_{\mathrm{wi}} \times x_i^2$, where x_i is the distance from the longitudinal centroid of the fin and webs and the web centres. Unless the webs are located towards the leading or trailing edges, the effect of neglecting the webs will be small.

E.3 Geometric properties (torsion)

The torsional properties are required for calculating the shear stress induced in the fin by the torque.

The maximum shear stress generally occurs parallel to the fin centreline (i.e. in the fore and aft direction) and is given by

$$\tau = \frac{T}{SM_{\mathrm{To}}} \tag{E.8}$$

expressed in newtons per square millimetre (N/mm^2)

where

T is the maximum torque in newton metres (N·m);

SM_{To} is the torsional section modulus and can be estimated with reasonable accuracy (cm^3)[5].

$$SM_{\mathrm{To}} = \frac{L_f \times b_f^2 \times k_f^2}{3\,000} \tag{E.9}$$

for a solid section

or

$$SM_{\mathrm{To}} = \frac{2 \times k_f \times t_f \times (L_f - t_f) \times (b_f - t_f)}{1000} \tag{E.10}$$

for a hollow, non-circular section.

---

5) The index “To”, for torsion, is used to avoid confusion with transversal section modulus.

Copyright International Organization for Standardization
© ISO 2012 – All rights reserved

Annex F
(informative)

Simplified fatigue strength assessment

IMPORTANT — The following methods and procedures are intended to provide an explicit and simple approach that can be employed by designers/builders without specialized fatigue knowledge.

F.1 Examples of fatigue failure inducing loads

Loads of lesser magnitude than those used in this part of ISO 12215 will have higher levels of occurrence:

— tacking and gybing — typically 10^4 stress reversals during a lifetime;

— rigid body motions — typically 10^5 stress reversals during a lifetime;

— fluttering or vibration related phenomena — typically 10^6 stress reversals during a lifetime.

In general, the magnitudes of these alternating stresses are expected to be much lower than those arising from the “static” load cases in this part of ISO 12215. In many cases, the stress will oscillate about a mean value that is not zero.

F.2 Fatigue-life assessment procedures

F.2.1 General

The procedures presented in this clause can be used to minimize the possibility of fatigue failure — the calculation method being, of course, of prime importance in that respect.

F.2.2 Design

Reference to *established practice* for good detail design can be found in ISO 12215-6.

F.2.3 Calculation

F.2.3.1 Nomenclature

There are two distinct types of stress-cycle data in fatigue calculations, S-N data and σ-n data.

S-N data

If the structure experiences a stress range (peak-to-peak value, or $\Delta\sigma$) of S N/mm^2, then it will suffer fatigue failure (fracture) after N stress cycles. The S-N data graph (also called Wöhler curve, as developed by August Wöhler), is a plot of the magnitude of a cyclical stress range, S, against the logarithmic scale of cycles to failure, N. It is derived by experiment and is *not* related in any way to the stress history any given craft may experience.

σ-n data

Any craft will experience a loading over its lifetime which may be represented as a series of actual stress ranges σ (i.e. experienced) for a given number of stress cycles n (i.e. experienced). This is purely a function of scantlings and operation and can only be estimated at the design stage.

Copyright International Organization for Standardization
© ISO 2012 – All rights reserved

In order to preserve this distinction, S and N are used for failure combinations while σ and n are used for combinations actually (or estimated to be) experienced by the craft.

F.2.3.2 Calculation method

For each load (heel angle/heading/sea state), the maximum and minimum stress shall be determined by numerical methods (σ_{max} and σ_{min} giving a stress range, σ_i) and an estimate made of the likely number of cycles experienced (n).

The S-N graph used shall come from a source reflecting the structural detail under consideration and, in the case of composites, shall reflect the layup. This may be done by selecting the appropriate weld classification and the associated S-N graph or by correcting a base material S-N graph (i.e. non-welded) for local stress raiser effects by determining the fatigue stress.

For each load case (load case i, consisting of σ_i and n_i) the ratio of the number of cycles experienced (n_i) divided by the number of cycles which would result in fatigue “failure” (N_i) shall be found. The total Miner's summation factor (MSF) is the sum of these ratios for all n load cases. MSF >1 indicates that the structure will in theory suffer fatigue failure within its design life.

The MSF is expressed as

$$\text{MSF} = \sum_{1}^{n} \frac{n_i}{N_i} \tag{F.1}$$

EXAMPLE Suppose by calculation, MSF comes out to be 1,75. The calculated fatigue life is estimated to be 1/1,75 = 0,57, i.e. 57 % of the intended design life. From F.3.1 this means a fatigue life of about 17 years for a typical recreational craft or three years of hard racing.

This does not mean that the craft is safe up to this time. The calculations should not be taken as precise enough for that, and are merely intended to serve as an indication as to where fatigue is an issue. In this case, the result would trigger a more sophisticated method — see F.4.

F.2.3.3 Simplified calculation method

A “default”, simplified, calculation method is given in F.3. Care should be taken to understand its limitations.

F.2.4 Inspection

F.2.4.1 General

The inspection method usually consists of the following:

— standard visual surveying techniques, e.g. regions of high stress should be examined for signs of paint or gelcoat cracking, bolt holes should be examined for signs of “ovaling”;

— non-destructive inspection techniques used to locate any cracks, such as dye penetrant, ultra-sonic measurement and other methods.

F.2.4.2 Reference in owner's manual

Where recommended by the manufacturer, the inspection method and procedure shall be clearly stated in the owner's manual.

Copyright International Organization for Standardization
© ISO 2012 – All rights reserved

F.3 Simplified calculation ("default") method

F.3.1 Limitations of simplified procedure

The principal role of the simplified calculation procedure is to act as an *identifier*. A very low MSF (see F.2.3.2) may be taken as indicating that further fatigue analyses are not necessary; conversely, a moderate-to-high MSF may be taken as indicating that further fatigue analyses *are* necessary. MSF > 0,5 should "trigger" a more refined engineering analysis.

The operational life of the craft is assumed to be 8 million stress cycles. This is based on an assumed operational envelope — various times on different points of sail, average tacking times for beating, average rolling periods for downwind, typical wave encounter periods, estimated heel angles — and is only intended to be representative.

This corresponds to about 25–30 years of moderate-to-high usage recreational sailing or about five years of very extensive ocean racing (one, 30 000 NM, competition plus associated training and preparation annually). This is 15 % of the figure of the number of cycles normally used in ship fatigue assessment.

The principal concern in the simplified method is keel fin failure at the root and that this is dominated by transverse (rolling/tacking induced) bending. The fin is assumed to be steel or aluminium and can be machined, cast or fabricated. There might or might not be welds relative to the highly stressed zone. This does not, however, mean that other areas are not prone to fatigue-induced failure — see F.3.4.3.

The stress range (σ_i and n_i) spectrum is represented by a single "linear" curve based on analysis of published methods. The stress range is taken as 1,5 × the stress amplitude obtained from load case 1 (non-canting keel) or load case 2 (canting keel). This corresponds to an R ratio of –0,5, where R is minimum/maximum stress and is intermediate between full reversal (R = –1) and repeated (R = 0). See F.3.2.

F.3.2 Determination of maximum stress range (full reversal) under load case 1 (non-canting keel) or load case 2 (canting keel)

The maximum actual stress, $\sigma_{\text{ACTUAL(PEAK)}}$, is taken as 1,5 times the nominal stress, σ_{NOMINAL}, at the keel root multiplied by the appropriate stress correction factor, k_{CORRN}. The factor of 1,5 is applied because the fatigue calculation in the simplified method is based on the intermediate case between full-reversal stress and repeated. This means the keel is assumed to experience a stress of $+(k_{\text{CORRN}} \times \sigma_{\text{NOMINAL}})$ to $-0{,}5 \times (k_{\text{CORRN}} \times \sigma_{\text{NOMINAL}})$, giving a stress range of $1{,}5 \times (k_{\text{CORRN}} \times \sigma_{\text{NOMINAL}})$, with a mean stress of $0{,}25 \times (k_{\text{CORRN}} \times \sigma_{\text{NOMINAL}})$:

$$\sigma_{\text{ACTUAL(PEAK)}} = 1{,}5 \times k_{\text{CORRN}} \times \sigma_{\text{NOMINAL}} \tag{F.2}$$

expressed in newtons per square millimetre (N/mm^2)

where

σ_{NOMINAL} is the maximum assessed peak stress at the keel root, obtained by dividing the bending moment from load case 1 or 2 by the fin section modulus;

k_{CORRN} is the stress correction factor, obtained from

$$k_{\text{CORRN}} = k_{\text{MOD}} \times k_{\text{CONS}} \times k_{\text{THK}} \times k_{\text{CANT}} \tag{F.3}$$

Copyright International Organization for Standardization
© ISO 2012 – All rights reserved

with k_{MOD}, the nominal (static) stress modifier factor, defined as

$$k_{\text{MOD}} = \frac{\text{maximal stress at point under consideration}}{\text{nominal stress from load case 1 or 2, i.e.} \dfrac{M_{1.1} \text{ or } M_{2.1}}{\text{Section modulus at fin root}}}$$

k_{MOD} is a collective factor which accounts for the presence of local stress raisers owing to geometric effects, dynamic magnification effects and additional stresses, due to heaving, pitching and torque induced by the bulb:

$$k_{\text{MOD}} = k_{\text{MOD1}} \times k_{\text{MOD2}}.$$

For welded keels, the geometric effect of the weld is allowed for in the S–N curve[12], but further increases in the values of k_{MOD} may be required[16].

For keels without a flange, k_{MOD1} = 1,0.

For keels with a top flange (whether welded, machined or cast), the local stress can be raised above the nominal value. For the purposes of the simplified method:

$$k_{\text{MOD1}} = \left(\frac{b_{\text{MAX-FIN}}}{r} \right)^{0,26} \tag{F.4}$$

where

$b_{\text{MAX-FIN}}$ is the maximum width of the fin at the flange ignoring the local radius (mm);

r is the radius at the keel-flange transition (mm), with r_{MAX} = 0,5 (flange width $-b_{\text{MAX-FIN}}$).

k_{MOD2} allows for dynamic and complex stress effects. The increase in the static stress from load case 1 or 2 due to the motion of the craft is termed the *dynamic magnification factor* and is a complex function of the natural period of the keel structure and the forcing period of the motion. In addition, the stress at the point under consideration could be enhanced by the presence of shear stresses due to torque (if the bulb centroid, for example, is well aft of the fin centroid) and stresses due to heave and pitch. k_{MOD2} = 1,1.

NOTE All this is in addition to the factor of 1,4 that is already included in $M_{2.1}$.

The consequence of the failure factor is k_{CONS}, is 1,1 for design categories A and B, and 1,0 for design categories C and D.

NOTE This factor reflects the more serious nature of the consequences of keel failure for ocean and offshore yachts.

The fin skin thickness factor, k_{THK}, is defined as

$$k_{\text{THK}} = 0,46 \times t_{\text{FIN}}^{\,0,25} \tag{F.5}$$

where t_{FIN} shall not be taken less than 22 mm nor greater than 35 mm and k_{THK} = 1,0 for machined/solid fins.

The canting keel thickness factor, k_{CANT}, is 1,15 for canting keels and 1,0 for fixed and lifting keels

NOTE A higher factor is used for canting keels because long-term experience with keels is less extensive than with fixed keels.

Copyright International Organization for Standardization
© ISO 2012 – All rights reserved

EXAMPLE A mild steel fin of design stress (σ_d) = 120 MPa is designed to a compliance value of 1,158 (i.e. it complies with load case 1 but not by a large margin). The craft is design category A and fixed (bolted) configuration. The fin is welded and the skin thickness is 25 mm:

k_{MOD} = 1,1 (minimum default value for a keel without a flange);

k_{CONS} = 1,1 (design category A);

$k_{THK} = 0{,}46 \times 25^{0{,}25} = 1{,}029$;

k_{CANT} = 1,0 (fixed keel);

$\sigma_{NOMINAL}$ = 120/1,158 = 103,6 N/mm^2 at keel root;

$\sigma_{ACTUAL\ (PEAK)} = 1{,}5 \times 1{,}1 \times 1{,}1 \times 1{,}029 \times 103{,}6 = 193{,}5$ N/mm^2.

F.3.3 Determination of number of cycles actually experienced for each stress range group

The method employed in this simplified procedure is to use the “indicative” number of stress cycles given in Table F.1 and Figure F.1.

Table F.1 — Normalized stress range against number of stress cycles experienced

$F_{\sigma i} = \dfrac{\sigma_{ACTUAL}}{\sigma_{ACTUAL(PEAK)}}$	n_i
0,975	10
0,925	20
0,875	40
0,825	80
0,775	150
0,725	300
0,675	580
0,625	1 120
0,575	2 300
0,525	4 400
0,475	8 700
0,425	17 300
0,375	34 000
0,325	67 000
0,275	130 000
0,225	260 000
0,175	520 000
0,125	1 000 000
0,075	2 000 000
0,025	3 954 000
Total	**8 000 000**

Copyright International Organization for Standardization
© ISO 2012 – All rights reserved

Once $\sigma_{\text{ACTUAL(PEAK)}}$ is known from F.3.2, σ_{ACTUAL} is derived from Table F.1 using $\sigma_{\text{ACTUAL}} = F_{\sigma i} \times \sigma_{\text{ACTUAL(PEAK)}}$, where $F_{\sigma i}$ is as defined in Table F.1.

The associated number of stress cycles actually experienced for any given σ_{ACTUAL} (according to the default stress spectrum) is taken from the corresponding row in the right hand column of Table F.1. See worked example and Table F.3.

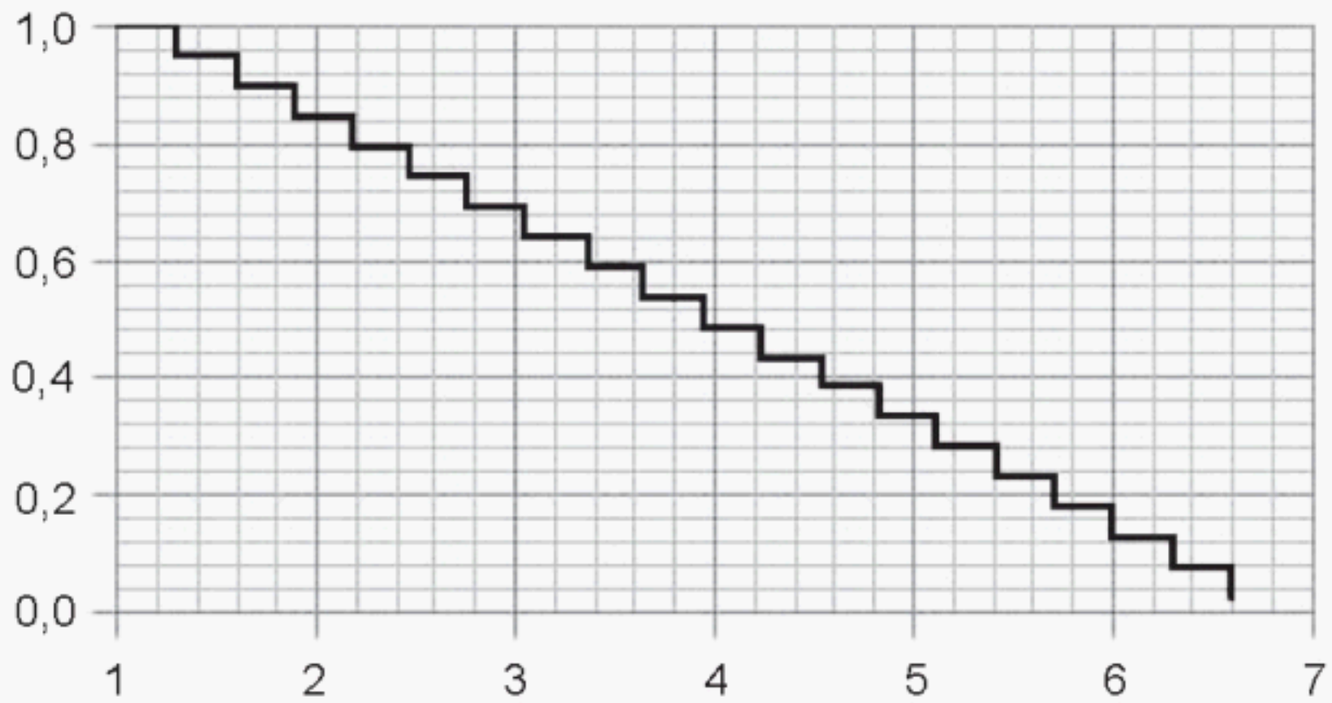

Figure F.1 — Stress range spectrum [stress range of group/maximum range vs Log (n), in cycles, of group]

NOTE 10 cycles is the assumed number of times load case 1 or 2 is expected to be experienced in a lifetime. Designers may choose a greater value.

A single curve only is supplied, which shall apply to all design categories; k_{CONS} takes the design category into account. This curve considers 8 000 000 (i.e. 8×10^6) to be the total number of stress cycles experienced during the lifetime of the craft.

F.3.4 Determination of S-N curve to be used with location selected at root

F.3.4.1 General

The relationship between N and $\dfrac{S_{\text{R}}}{\sigma_{\text{ACTUAL}}}$ is such that

$$\text{Log}(N) = 6{,}3 + 3 \times \text{Log}\left(\frac{S_{\text{R}}}{\sigma_{\text{ACTUAL}}}\right) \tag{F.5}$$

where

N is the number of stress cycles which will cause fracture under a stress range, σ_{ACTUAL};

S_{R} is the reference failure stress range at 2 million stress cycles.

NOTE Equation (F.5) is likely to be non-conservative for plating well in excess of 22 mm (see F.3.1).

For unwelded and welded structures, S_{R} shall be determined as given in F.3.4.2 and F.3.4.3.

Copyright International Organization for Standardization
© ISO 2012 – All rights reserved

F.3.4.2 For unwelded structures

S_R shall be taken as

— 160 N/mm^2 for steel [corrected using Equation (F.6)], and

— 60 N/mm^2 for aluminium alloy (not to be corrected).

For steel only:

$$S_{R(\text{corrected})} = 160 \times \left(1 + \frac{\sigma_Y - 235}{1\,200}\right) \quad \text{(F.6)}$$

where σ_Y is the (unwelded) steel yield strength in newtons per square millimetre (N/mm^2) and is not to be taken as greater than 390 N/mm^2.

NOTE In general, an unwelded structure means a machined or cast keel.

The limit of 390 N/mm^2 is taken as the generally accepted upper limit on “moderate” higher strength steels. This is not to say that very high strength steels might not have better fatigue resistance characteristics, merely that the available data does not support use of a larger correction factor than 1,13. It should be recognized that the “default method” does not claim to cover all materials and load cycles.

F.3.4.3 For welded structures

For welded structures, the assessment depends on whether the analysed element is *within a welded area* or *well clear of weld heat-affected zones*.

a) **Within welded areas**

For elements located within welded areas (see Note in F.3.4.2), Table F.2 shall be used according to weld type.

b) **Well clear of weld heat-affected zones (HAZ)**

In some circumstances the point of greatest stress at root $\sigma_{ACTUAL(PEAK)}$ is located *well clear of weld heat-affected zones* — in which case, the following procedure shall be adopted:

Fatigue life calculations shall be made:

— at the most highly stressed point, $\sigma_{ACTUAL(PEAK)}$, where this is *well clear of weld heat-affected zones* using the unwelded S_R value for steel as 160 steel N/mm corrected as appropriate using Equation (F.6), or 60 N/mm^2 for aluminium with *no* correction;

— at a number of weld locations, using the expected stress in each weld ($\sigma_{ACTUAL(PEAK)} \times W_F$) and the appropriate S_R value taken from Table F.2, where W_F = weld factor = stress in weld/$\sigma_{NOMINAL}$. In that case, Equation (F.6) shall not be applied and k_{MOD1} need not in general be taken as other than 1,0, since the stress concentration effect due to weld geometry is included in the S_R value. The weld factor will, in some cases, be the simple ratio of distances from the neutral axis of bending, e.g. $W_F = z_w/z_p$ (see Figure F.2).

Copyright International Organization for Standardization
© ISO 2012 – All rights reserved

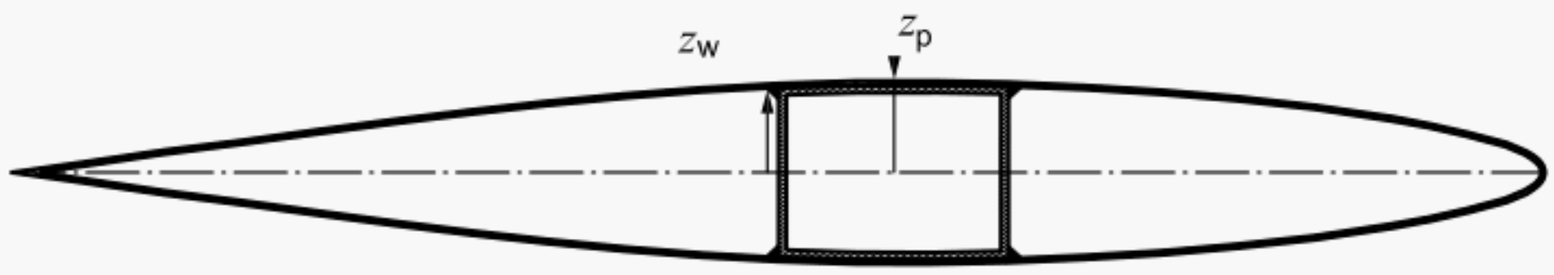

Key

z_w distance to outer limit of welding

z_p distance to outer limit of plating

Figure F.2 — Finding weld factor — Example

The highest MSF value obtained from these areas (see F.4) shall be taken as the governing value.

NOTE It is not necessary to explicitly define *well clear of a weld heat-affected zone*. If the weld is not "well clear" of a HAZ, the stress in the weld will be close to that of the "well clear" value (i.e. $W_F \approx 1$) and hence with the greatly reduced S_R value to be used in the weld zone, the governing MSF value will be that of the weld S_R values, depending on weld type and orientation.

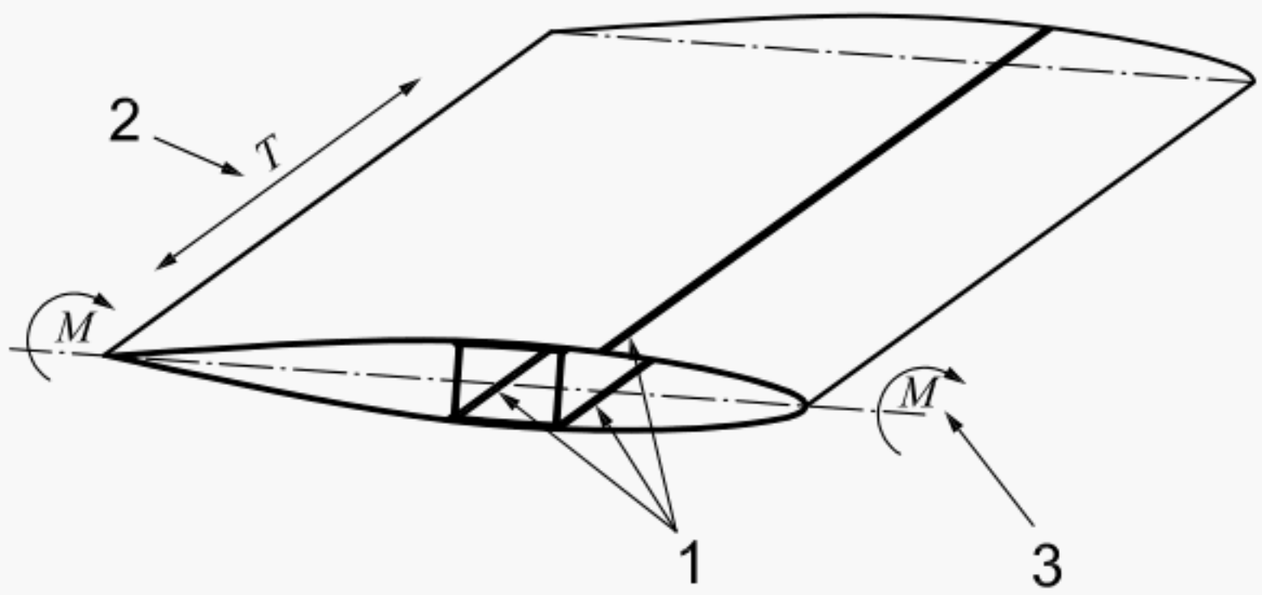

a) Longitudinal welds, running parallel to the tensile stress direction due to $M_{1.1}$ or $M_{2.1}$

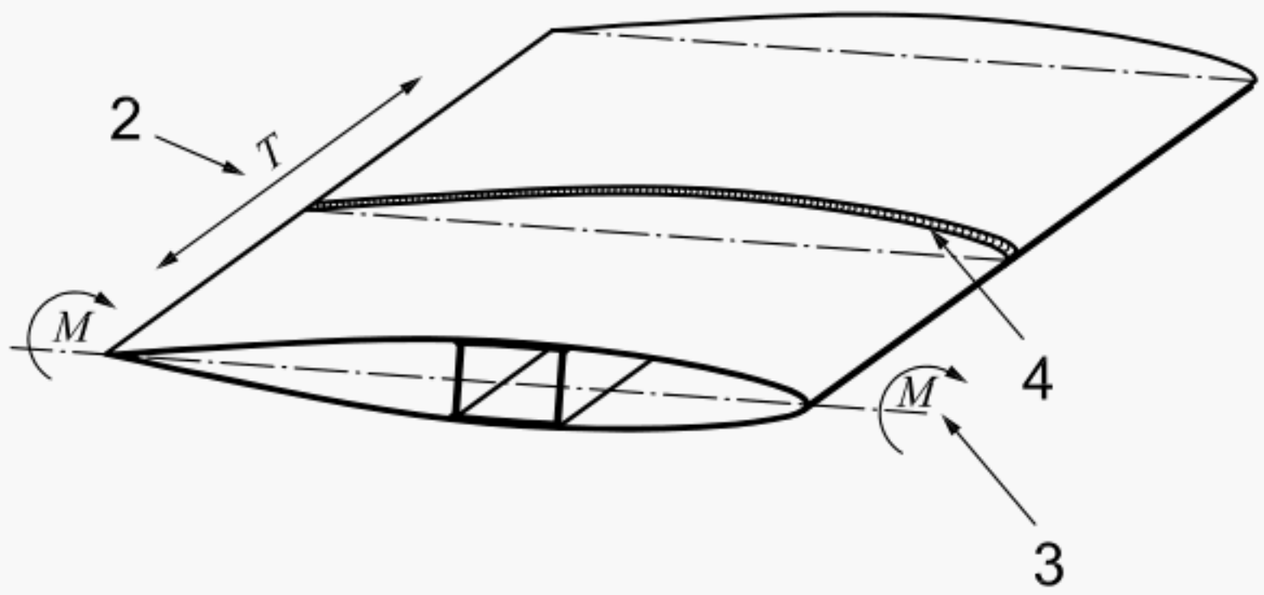

b) Transverse welds, running perpendicular to the tensile stress direction due to $M_{1.1}$ or $M_{2.1}$

Key

1 longitudinal welds, running parallel to the tensile stress direction due to $M_{1.1}$ or $M_{2.1}$

2 tensile stress direction, on top face only

3 bending moment $M_{1.1}$ or $M_{2.1}$

4 transverse welds, running perpendicular to the tensile stress direction due to $M_{1.1}$ or $M_{2.1}$

Figure F.3 — Longitudinal and transverse welds

Copyright International Organization for Standardization
© ISO 2012 – All rights reserved

Table F.2 — Values of S_R

Weld Category	Description	S_R Steel N/mm²	Weld
U	Unwelded	160	—
Transverse butt welds			
T1	Ground flush to plate, 100 % NDT (non-destructive testing)	112	
T2	Max. weld reinforcement 1mm + 0,1 × weld width, smooth edges, NDT	90	
T3	Weld not meeting the criteria of T2, NDT	80	
T4	One-sided full penetration, NDT controlled root	71	
T5	One-sided full penetration, no NDT control	45	
T6	Partial penetration	≤36	
Longitudinal welds			
L1	Continuous automatic full penetration butt weld	125	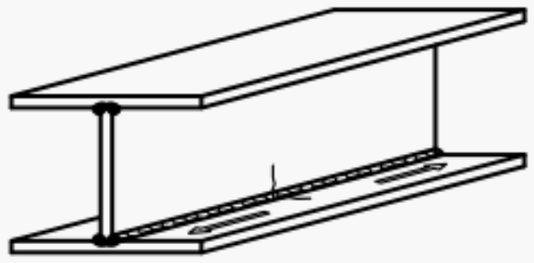
L2	Continuous automatic fillet weld	100	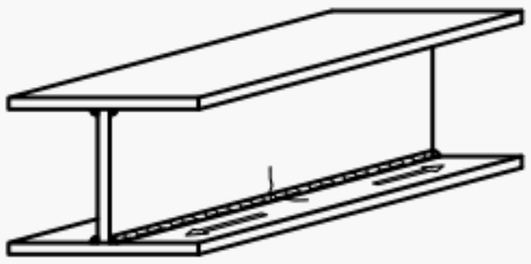
L3	Continuous manual fillet or butt weld	90	
L4	Intermittent fillet weld	80	
L5	Any weld type with cut-out present	63	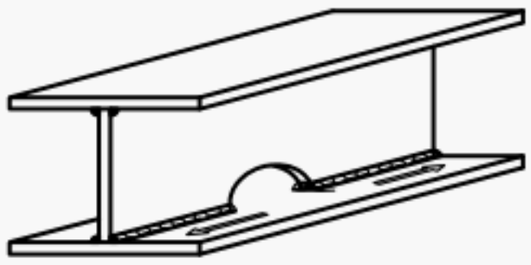
L6	Other types of longitudinal weld of lower quality	45	—
For aluminium alloy, the S_R value is to be taken as 0,375 × S_R (steel).			
NOTE This list is not meant to be exhaustive and may be supplemented using Reference [12] or other well-established sources.			

EXAMPLE Following the worked example in F.3.2: a weld detail, L6, is at the location of the maximum stressed point, i.e. from Table F.2, S_R = 45 N/mm². As the fin is welded, the correction factor in Equation (F.7) is 1,0 and hence $\text{Log}_{10}(N) = 6{,}3 + 3\ \text{Log}_{10}(45/\sigma_{ACTUAL})$.

Copyright International Organization for Standardization
© ISO 2012 – All rights reserved

For each value of $\sigma_{ACTUAL}/\sigma_{ACTUAL(PEAK)}$ of Table F.1, the value of σ_{ACTUAL} shall be assessed. For example, in the fourth row of Table F.1, $\sigma_{ACTUAL}/\sigma_{ACTUAL(PEAK)}$ = 0,825, and 0,825 × 193,5 = 159,6 N/mm^2 and $\text{Log}_{10}(N)$ = 6,3 + 3 Log_{10}(45/159,6) = 4,65. This is converted to N by calculating $10^{4,65}$ = 44 668 = 4,47E+04.

This value of N is the number of cycles which would be *needed* to cause fatigue failure under a stress of 213 N/mm^2. The actual number of stress cycles is only 80 (fourth row of Table F.1), so only a small proportion of the fatigue life is "used up" in this stress group. See also the shaded lines in Tables F.3 and F.4.

Table F.1 is finally transformed into Table F.3.

Table F.3 — Stress range vs number of stress cycles to cause failure (worked example)

σ_{ACTUAL}	N_i
189	2,71E+04
179	3,17E+04
169	3,75E+04
160	4,47E+04
150	5,39E+04
140	6,59E+04
131	8,16E+04
121	1,03E+05
111	1,32E+05
102	1,73E+05
92	2,34E+05
82	3,27E+05
73	4,76E+05
63	7,31E+05
53	1,21E+06
44	2,20E+06
34	4,68E+06
24	1,28E+07
15	5,95E+07
5	1,61E+09

F.3.5 Determination of MSF value

Take each value of N, or convert $\text{Log}_{10}(N)$ into cycles (10^n). Find the ratio of n/N for each stress group.

If the Log(N) value is greater than 7,0, the n/N ratio shall be taken as zero.

EXAMPLE Continuing with the keel flange: Table F.4 is finally determined from Table F.3.

Copyright International Organization for Standardization

Table F.4 — Determination of the value of MSF (worked example)

$\frac{\sigma_{ACTUAL}}{\sigma_{ACTUAL(PEAK)}}$	σ_{ACTUAL}	n_i	N_i	n_i/N_i
0,975	189	1,00E+01	2,71E+04	3,7E-04
0,925	179	2,00E+01	3,17E+04	6,3E-04
0,875	169	4,00E+01	3,75E+04	1,1E-03
0,825	160	8,00E+01	4,47E+04	1,8E-03
0,775	150	1,50E+02	5,39E+04	2,8E-03
0,725	140	3,00E+02	6,59E+04	4,6E-03
0,675	131	5,80E+02	8,16E+04	7,1E-03
0,625	121	1,12E+03	1,03E+05	1,1E-02
0,575	111	2,30E+03	1,32E+05	1,7E-02
0,525	102	4,40E+03	1,73E+05	2,5E-02
0,475	92	8,70E+03	2,34E+05	3,7E-02
0,425	82	1,73E+04	3,27E+05	5,3E-02
0,375	73	3,40E+04	4,76E+05	7,1E-02
0,325	63	6,70E+04	7,31E+05	9,2E-02
0,275	53	1,30E+05	1,21E+06	1,1E-01
0,225	44	2,60E+05	2,20E+06	1,2E-01
0,175	34	5,20E+05	4,68E+06	1,1E-01
0,125	24	1,00E+06	1,28E+07	0,0E+00
0,075	15	2,00E+06	5,95E+07	0,0E+00
0,025	5	3,95E+06	1,61E+09	0,0E+00
Miner's summation				0,66

F.3.6 Use of MSF value

If MSF < 0,5:

The calculated fatigue life will exceed the design life with an effective safety factor of 2 or more. This is the desired result. However, it is important to include the effect of stress concentration and welding, since otherwise the simplified procedure is meaningless.

If 0,5 ≤ MSF ≤ 1:

The calculated fatigue life will exceed the design life with an effective safety factor of between 1 and 2. As MSF approaches 0,7 and beyond, the uncertainties in the simplified method become increasingly critical and further investigation using more advanced engineering methods is strongly recommended.

If MSF > 1:

The calculated fatigue life will be less than the design life. The fatigue life is unsatisfactory according to the simplified method. Further analyses and/or redesign are essential.

Copyright International Organization for Standardization
© ISO 2012 – All rights reserved

EXAMPLE 5 In the worked example MSF = 0,66. The fatigue life of the craft is therefore about 1,5 times the design life as 1/0,66 = 1,5. Even allowing for uncertainties in the simplified method, it seems unlikely that fatigue would be an issue here.

— Keels which have been found to correspond to low MSF values are machined or cast keels, or fabricated keels in normal strength steels, or higher strength steel keels designed to large compliance factors under load case 1 (static).

— Keels which have been found to correspond to high and sometimes unacceptably high MSF values are very high-strength welded steel keels designed to compliance factors only slightly greater than 1 under load case 1 (static).

F.3.7 Permissible stress approach

While the tabular method is to be used for determination of the MSF, an MSF of approximately 0,5 will normally be achieved if the fin under load case 1 or load case 2 is designed to a maximum permissible stress of:

$$\sigma_{\text{NOMINAL}} = \frac{2{,}61 \times S_{\text{R}}}{k_{\text{CORRN}}}$$

where S_{R} is as defined in F.3.4 and k_{CORRN} is as defined in F.3.2

F.4 Full calculation method

The “default” procedure is not suitable for the following situations:

— fatigue life estimation for composites, wood or lead structures, particularly carbon fin keels undergoing fluttering;

— where loading is complex, consisting of torsional, transverse and longitudinal bending;

— where the actual stress spectrum cannot be represented by the simplified n_i values of Table F.1;

— where there are significant stress concentration effects;

— where the mean stress exercises a significant effect on the S-N curve;

— as a stand-alone method in cases where the MSF factor is greater than 0,5.

It is not the place of this part of ISO 12215 to provide a full explanation of fatigue life prediction. Good reference sources are classification society rules and direct calculation procedural documents (see the Bibliography). However, in general terms, the following components might be expected in a full method:

— finite-element-analysis-based, spatial stress distribution, as this will reflect geometric stress concentration effects more accurately provided the mesh is well defined for discontinuities;

— a set of application-specific S-N curves;

— a designer/operator specified stress history.

The use of any component from the default method within a full analysis is discouraged.

Moreover, fatigue life can be greatly extended by careful attention to design detail. Much of this is to be found in ISO 12215-6 and is therefore not reproduced here.

Copyright International Organization for Standardization
© ISO 2012 – All rights reserved

Bibliography

[1] ISO 5817, *Welding — Fusion-welded joints in steel, nickel, titanium and their alloys (beam welding excluded) — Quality levels for imperfections*. Corrected by ISO 5817:2003/Cor. 1:2006

[2] ISO 12217 (all parts), *Small craft — Stability and buoyancy assessment and categorization*

[3] ISO 16143-2, *Stainless steels for general purposes — Part 2: Semi-finished products, bars, rods and section*

[4] EN/TS 13001-3, *Cranes — General design*

[5] EN 10025-6, *Hot rolled products of structural steels — Part 6: Technical delivery conditions for flat products of high yield strength structural steels in the quenched and tempered condition*

[6] EN 10088-3, *Stainless steels — Part 3: Technical delivery conditions for semi-finished products, bars, rods, wire, sections and bright products of corrosion resisting steels for general purposes*

[7] IIW doc. XIII-1965-03/XV-1127-03, *Recommendation for fatigue design of welded joints and components*

[8] VDI 2230-1, *Systematic calculation of high duty bolted joints — Joints with one cylindrical bolt*[6)]

[9] NF E25-030-1, *Fasteners — Threaded connections — Part 1: General rules for design, calculation and mounting*

[10] American Bureau of shipping, *Guide for building and classing Offshore racing yachts*. Plus amendments ABS 1994

[11] LARSSON, L. and ELIASSON, R. *Principles of Yacht Design*. Adlard Coles. London, 2000

[12] Germanischer Lloyd: Rules and Guidelines, I Ship Technology. Part 1, Seagoing Ships. Ch. 1, *Hull Structures*. Clause 20, *Fatigue Strength*. GL, 2006

[13] Det Norske Veritas, *Rules for High Speed, Light Craft and Naval Surface Craft*. Pt.3, Ch.4, Sec.9, 2003

[14] Det Norske Veritas, *Fatigue assessment of ship structures*, Classification Note C30.7, June 2010

[15] Bureau Veritas: Rules for the classification and the certification of yachts. July 2006

[16] *Formulas for stress and strain*. Roark &Young. Mc Graw Hill

[17] PILKEY, W.D. *Peterson's Stress Concentration Factors*. John Wiley & Sons,1997

[18] *Marine Design Manual*. Gibbs & Cox. Mc Graw-Hill, 1960[7)]

[19] Fiberglass Boat Design and Construction by Robert Scott - SNAME 1996

[20] GOUGEON, M. *The Gougeon Brothers on Boat Construction: Wood and West System Materials*. 5th edition, hardcover, 406 pp. West System, Bay City, Michigan, USA

[21] *Marine Composites*. Second edition. Eric Green Associates

---

6) The Association of German Engineers.

7) About the same contents may be found in[21].

Copyright International Organization for Standardization
© ISO 2012 – All rights reserved

Copyright International Organization for Standardization

ICS 47.080

Price based on 76 pages

© ISO 2012 – All rights reserved
Copyright International Organization for Standardization