BRITISH STANDARD

BS ISO 4925:2005

Incorporating Corrigendum No. 1

Road vehicles — Specification of non-petroleum-base brake fluids for hydraulic systems

ICS 43.040.40; 75.120

British Standards

Licensed copy: Lee Shau Kee Library, HKUST, Version correct as of 03/01/2015, (c) The British Standards Institution 2013

Licensed copy: Lee Shau Kee Library, HKUST, Version correct as of 03/01/2015, (c) The British Standards Institution 2013

National foreword

This British Standard reproduces verbatim ISO 4925:2005 and implements it as the UK national standard. It supersedes BS AU 174-2:1985 which is withdrawn.

The UK participation in its preparation was entrusted to Technical Committee PRI/69, Components and fluids for vehicle braking systems, which has the responsibility to:

— aid enquirers to understand the text;

— present to the responsible international/European committee any enquiries on the interpretation, or proposals for change, and keep the UK interests informed;

— monitor related international and European developments and promulgate them in the UK.

A list of organizations represented on this committee can be obtained on request to its secretary.

Cross-references

The British Standards which implement international publications referred to in this document may be found in the BSI Catalogue under the section entitled "International Standards Correspondence Index", or by using the "Search" facility of the BSI Electronic Catalogue or of British Standards Online.

This publication does not purport to include all the necessary provisions of a contract. Users are responsible for its correct application.

Compliance with a British Standard does not of itself confer immunity from legal obligations.

Summary of pages

This document comprises a front cover, an inside front cover, the ISO title page, pages ii to v, a blank page, pages 1 to 25 and a back cover.

The BSI copyright notice displayed in this document indicates when the document was last issued.

This British Standard was published under the authority of the Standards Policy and Strategy Committee on 1 March 2005

© BSI 15 March 2005

ISBN 0 580 45557 2

Amendments issued since publication

Amd. No.	Date	Comments
~~15630~~	~~15 March 2005~~	~~Correction to supersession~~
Corrigendum No. 1		

Licensed copy: Lee Shau Kee Library, HKUST, Version correct as of 03/01/2015, (c) The British Standards Institution 2013

5B3125C29492C5E2081B5

INTERNATIONAL STANDARD

ISO 4925

Second edition
2005-02-01

Road vehicles — Specification of non-petroleum-base brake fluids for hydraulic systems

Véhicules routiers — Spécifications pour liquides de frein à base non pétrolière pour systèmes hydrauliques

Reference number
ISO 4925:2005(E)

© OSI 5002

Licensed copy: Lee Shau Kee Library, HKUST, Version correct as of 03/01/2015, (c) The British Standards Institution 2013

DPIcsid Fremia

ihTs PDF file may ctnoian emdebt dedyfepcaes. In ccaocnadrw eith A'ebods licensilop gnic,y this file mairp eb ynted iv roweb detu slahl ton ide ebtlnu deess the typefaces whice era hml era deddebicsnede to i dnanstlaled t noeh computfrep reormign tide ehtin.g In wodlnidaot gnhis file, trapise atpecc tiereht nser ehnopsiiblity fo not infriignng A'ebods licensilop gnic.y ehT ISO tneClar Secrteiraat caceptl on siibality in this .aera

Ai ebods a tredamafo kr Aebod Systeml sncotaropr.de

teDails fo teh softwacudorp erts sut deo crtaee this PDF file cna f ebi dnuon tlareneG eh Info leratit evo the file; tP ehDc-Frtaeion marapterew setpo erimizde for irpnti.gn Evyre caer neeb sah taken to sneeru that the file is suitlbae fosu re yb ISO memdob rebeis. In tlnu ehikletneve y ttah lborp aem leratit gno it is f,dnuo plsaee inform ttneC ehlar Secrteiraat ta the serddaig sleb nevwo.

© ISO 5002

All irthgs erse.devr lnUeto sswrehise specified, on trap fo this lbupictaion maeb y cudorperro de tuilizi den yna form ro na ybm ynae,s lecetrinoc ro mecinahcal, inclidung tohpcoiypodna gn micrfoilm, wittuoh repmissii non writign from ietl rehSa Ot tsserdda eh ebolw or IS'Os memreb i ydobn the cnuotrfo y ttseuqer ehe.r

ISO cirypothg fofice

saCe tsopale 65 •eneG 1121-HC 02 av

leT. 4 + 10 947 22 1 11

xaF0 947 22 14 + 9 74

E-mail coirypthgi@so.o gr
We bwww.is.o gro

Published in Switzerland

© ISO– 5002 Allr ithgsr esedevr

Licensed copy: Lee Shau Kee Library, HKUST, Version correct as of 03/01/2015, (c) The British Standards Institution 2013

Contents

Page

Foreword ... iv
Introduction ... v
1 **Scope** ... 1
2 **Normative references** ... 1
3 **Materials** ... 2
4 **Specifications** ... 2
5 **Test methods** ... 5
5.1 **Viscosity** ... 5
5.1.1 **General** ... 5
5.1.2 **Repeatability (single analyst)** ... 5
5.1.3 **Reproducibility (multi-laboratory)** ... 5
5.2 **Equilibrium reflux boiling point (ERBP)** ... 5
5.2.1 **General** ... 5
5.2.2 **Preparation of apparatus** ... 5
5.2.3 **Test procedure** ... 6
5.2.4 **Repeatability (single analyst)** ... 6
5.2.5 **Reproducibility (multi-laboratory)** ... 6
5.2.6 **Wet ERBP test** ... 6
5.3 **pH** ... 9
5.4 **Fluid stability** ... 9
5.4.1 **High-temperature stability** ... 9
5.4.2 **Chemical stability** ... 10
5.5 **Corrosion** ... 10
5.5.1 **Metal strip characteristics prior to testing** ... 10
5.5.2 **Preparation of joints** ... 10
5.5.3 **Test procedure** ... 11
5.6 **Fluidity and appearance at low temperatures** ... 11
5.6.1 **At − 40 °C for 144 h** ... 11
5.6.2 **At − 50 °C for 6 h** ... 12
5.7 **Water tolerance** ... 12
5.7.1 **At − 40 °C for 22 h** ... 12
5.7.2 **At 60 °C for 22 h** ... 12
5.8 **Compatibility/miscibility with ISO 4926 fluid** ... 12
5.8.1 **At – 40 °C for 22 h** ... 12
5.8.2 **At 60 °C for 22 h** ... 12
5.9 **Resistance to oxidation** ... 12
5.10 **Effect on rubber** ... 13
5.10.1 **General** ... 13
5.10.2 **Test procedures** ... 13
5.10.3 **Repeatability (single analyst)** ... 14
5.10.4 **Reproducibility (multi-laboratory)** ... 14
Annex A (normative) **ISO Styrene-butadiene rubber (SBR) brake cups for testing brake fluid** ... 15
Annex B (normative) **Corrosion test strips** ... 18
Annex C (normative) **Corrosion strip assembly** ... 19
Annex D (normative) **Standard ethylene, propylene and diene (EPDM) terpolymer rubber slabstock** ... 20
Annex E (normative) **Triethylene glycol monomethyl ether (TEGME) brake fluid grade** ... 22
Bibliography ... 25

Licensed copy: Lee Shau Kee Library, HKUST, Version correct as of 03/01/2015, (c) The British Standards Institution 2013

Foreword

ISO (the International Organization for Standardization) is a worldwide federation of national standards bodies (ISO member bodies). The work of preparing International Standards is normally carried out through ISO technical committees. Each member body interested in a subject for which a technical committee has been established has the right to be represented on that committee. International organizations, governmental and non-governmental, in liaison with ISO, also take part in the work. ISO collaborates closely with the International Electrotechnical Commission (IEC) on all matters of electrotechnical standardization.

International Standards are drafted in accordance with the rules given in the ISO/IEC Directives, Part 2.

The main task of technical committees is to prepare International Standards. Draft International Standards adopted by the technical committees are circulated to the member bodies for voting. Publication as an International Standard requires approval by at least 75 % of the member bodies casting a vote.

Attention is drawn to the possibility that some of the elements of this document may be the subject of patent rights. ISO shall not be held responsible for identifying any or all such patent rights.

ISO 4925 was prepared by Technical Committee ISO/TC 22, *Road vehicles*, Subcommittee SC 2, *Braking systems and equipment*.

This second edition cancels and replaces the first edition (ISO 4925:1978), which has been technically revised.

I ©SO – 5002 All irthgs ersedevr

Licensed copy: Lee Shau Kee Library, HKUST, Version correct as of 03/01/2015, (c) The British Standards Institution 2013

Introduction

The specifications for fluids given in this International Standard incorporate a range of performance standards in use throughout the world at the time of publication. The classes include fluids technically equivalent to those designated DOT 3, DOT 4 and DOT 5.1.

The major use of these fluids is in the hydraulic brake and clutch systems of road vehicles, but they can also be used in any suitable hydraulic system.

Licensed copy: Lee Shau Kee Library, HKUST, Version correct as of 03/01/2015, (c) The British Standards Institution 2013

blank

INTENRATIONAL TSANDADR

IS:5294 O5002(E)

Licensed copy: Lee Shau Kee Library, HKUST, Version correct as of 03/01/2015, (c) The British Standards Institution 2013

Road vehicles — Specification of non-petroleum-base brake fluids for hydraulic systems

1 Scope

This International Standard gives the specifications — requirements and test methods — for non-petroleum-base fluids used in road-vehicle hydraulic brake and clutch systems that are designed for use with such fluids and equipped with seals, cups or double-lipped type gland seals made of styrene-butadiene rubber (SBR) and ethylene-propylene elastomer (EPDM).

2 Normative references

The following referenced documents are indispensable for the application of this document. For dated references, only the edition cited applies. For undated references, the latest edition of the referenced document (including any amendments) applies.

ISO 37:1994, *Rubber, vulcanized or thermoplastic — Determination of tensile stress-strain properties*

ISO 48:1994, *Rubber, vulcanized or thermoplastic — Determination of hardness (hardness between 10 IRHD and 100 IRHD)*

ISO 812:1991, *Rubber, vulcanized — Determination of low-temperature brittleness*

ISO 815:1991, *Rubber, vulcanized or thermoplastic — Determination of compression set at ambient, elevated or low temperatures*

ISO 3104:1994, *Petroleum products — Transparent and opaque liquids — Determination of kinematic viscosity and calculation of dynamic viscosity*

ISO 4926:1978, *Road vehicle — Hydraulic brake systems — Non petroleum base reference fluids*

ASTM D 91, *Standard test method for precipitation number of lubricating oils*

ASTM E 298, *Standard test methods for assay of organic peroxides*

ASTM D 395, *Standard test methods for rubber property — Compression set*

ASTM D 412, *Standard test methods for vulcanized rubber and thermoplastic elastomers — Tension*

ASTM D 664, *Standard test method for acid number of petroleum products by potentiometric titration*

ASTM D 746, *Standard test method for brittleness temperature of plastics and elastomers by impact*

ASTM D 865, *Test method for rubber — Deterioration by heating in air (test tube enclosure)*

ASTM D 1120, *Standard test method for boiling point of engine coolants*

ASTM D 1123, *Standard test method for water in engine coolant concentrate by the Fisher reagent method*

Licensed copy: Lee Shau Kee Library, HKUST, Version correct as of 03/01/2015, (c) The British Standards Institution 2013

ASTM D 1209, *Standard test method for colour of clear liquids (platinum-cobalt scale)*

ASTM D 1364, *Standard test method for water in volatile solvents (Karl Fischer reagent titration method)*

ASTM D 1415, *Standard test method for rubber property — International hardness*

ASTM D 1613, *Standard test method for acidity in volatile solvents and chemical intermediates used in paint, varnish, lacquer and related products*

ASTM D 3182, *Standard practice for rubber — Materials, equipment and procedures for mixing standard compounds and preparing standard vulcanized sheets*

SAE J 1703, *Motor vehicle brake fluid*

3 Materials

On visual inspection, the fluid shall be clear and free of suspended matter, dirt and sediment. The quality of the materials used shall be such that the resulting product conforms to the requirements of this International Standard and that uniformity of performance is ensured. Fluids may be dyed, provided no confusion is possible between them and other types of fluids.

4 Specifications

The product shall meet the requirements for the appropriate class in accordance with Table 1, using the test methods according to Clause 5.

NOTE It is intended that a stroking test be added to a future revision of this International Standard.

Table 1 — Brake fluid specifications — Tests and requirements

Test method (subclause)	Test description	Unit	Requirement(s) Class 3	Class 4	Class 5-1	Class 6
5.1	Viscosity					
	at − 40 °C	mm^2/s	u 1 500		u 900	u 750
	at 100 °C	mm^2/s		W 1,5		
5.2	Equilibrium reflux boiling point (ERBP)	°C	W 205	W 230	W 260	W
250 5.2.6	Wet ERBP	°C	W 140	W 155	W 180	
W 165 5.3	pH		—	7 to 11,5		
5.4	Fluid stability					
5.4.1	High-temperature stability	°C	± 5 °C			
5.4.2	Chemical stability	°C	± 5 °C			

Licensed copy: Lee Shau Kee Library, HKUST, Version correct as of 03/01/2015, (c) The British Standards Institution 2013

Table 1 — Brake fluid specifications — Tests and requirements (*continued*)

Test method (subclause)	Test description	Unit	Requirement(s) Class 3	Class 4	Class 5-1	Class 6
5.5	Corrosion					
	Metal strip characteristics after testing					
	Mass change					
	Tinned iron	mg/cm^2	− 0,2 to 0,2			
	Steel	mg/cm^2	− 0,2 to 0,2			
	Aluminium	mg/cm^2	− 0,1 to 0,1			
	Cast iron	mg/cm^2	− 0,2 to 0,2			
	Brass	mg/cm^2	− 0,4 to 0,4			
	Copper	mg/cm^2	− 0,4 to 0,4			
	Aspect	—	No pitting or roughness outside contact area			
	Staining/discoloration	—	Permitted			
	Liquid characteristics after testing					
	Aspect	—	No gel, none adhering crystals			
	pH	—	7 to 11,5			
	Sediment	% vol.	u 0,1			
	Rubber cup characteristics after testing					
	Blisters or carbon black separation at surface	—	None			
	Hardness decrease	IRHD	u 15			
	Base diameter increase	mm	u 1,4			
	Volume increase	%	u 16			
5.6	Fluidity and appearance at low temperatures					
5.6.1	at − 40 °C for 144 h					
	Aspect	—	Clear and homogeneous			
	Bubble flow time	s	u 10			
	Sediments	—	Absence			
5.6.2	at − 50 °C for 6 h					
	Aspect	—	Clear and homogeneous			
	Bubble flow time	s	u 35			
	Sediments	—	Absence			

Licensed copy: Lee Shau Kee Library, HKUST, Version correct as of 03/01/2015, (c) The British Standards Institution 2013

Table 1 — Brake fluid specifications — Tests and requirements *(continued)*

Test method (subclause)	Test description	Unit	Requirement(s) Class 3	Class 4	Class 5-1	Class 6
5.7	Water tolerance					
5.7.1	at − 40 °C for 22 h					
	Aspect	—	Clear and homogeneous			
	Bubble flow time	s	u 10			
	Sediments	—	Absence			
5.7.2	at 60 °C for 22 h					
	Aspect	—	Clear and homogeneous			
	Sediments	% vol.	u 0,05			
5.8	Compatibility/miscibility with ISO 4926 fluid					
5.8.1	at − 40 °C for 22 h					
	Aspect	—	Clear and homogeneous			
	Sediments	—	Absence			
5.8.2	at − 60 °C for 22 h					
	Aspect	—	Clear and homogeneous			
	Sediments	% vol.	u 0,05			
5.9	Resistance to oxidation					
	Metal strip aspect	—	No pitting or roughness no more than a trace of gum			
	Staining/discoloration	—	Permitted			
	Mass change of aluminium strip	mg/cm^2	− 0,05 to + 0,05			
	Mass change of cast iron strip	mg/cm^2	− 0,3 to + 0,3			
5.10	Effect on rubber					
5.10.2.1	Styrene Butadiene Rubber (SBR)					
	at 120 °C					
	Cup diameter increase	mm	0,15 to 1,4			
	Hardness change	IRHD	− 15 to 0			
	Volume increase	%	1 to 16			
	Blisters or carbon black separation at surface	—	None			
5.10.2.2	Ethylene Propylene Diene Monomer (EPDM)					
	at 120 °C					
	Hardness change	IRHD	− 15 to 0			
	Volume change	%	0 to 10			
	Blisters or carbon black separation at surface	—	None			

NOTE It is intended that a stroking test be added to a future revision of this International Standard.

Licensed copy: Lee Shau Kee Library, HKUST, Version correct as of 03/01/2015, (c) The British Standards Institution 2013

5 Test methods

5.1 Viscosity

5.1.1 General

Determine the kinematic viscosity of the fluid in accordance with ISO 3104.

Report the viscosity to the nearest 1 mm^2/s at − 40 °C and to the nearest 0,01 mm^2/s at + 100 °C. Duplicate runs that agree within 1,2 % relative are acceptable for averaging (95 % confidence level).

5.1.2 Repeatability (single analyst)

The coefficient of variation of results (each the average of duplicates) obtained by the same analyst on different days shall not be greater than 0,4 % at 47 degrees of freedom. Two such values shall be considered unacceptable (95 % confidence level) if they differ by more than 1,2 %.

5.1.3 Reproducibility (multi-laboratory)

The coefficient of variation of results (each the average of duplicates) obtained by analysts in different laboratories shall not be greater than 1,0 % at 15 degrees of freedom. Two such values shall be considered unacceptable (95 % confidence level) if they differ by more than 3,0 %.

5.2 Equilibrium reflux boiling point (ERBP)

5.2.1 General

Determine the ERBP of the fluid in accordance with ASTM D 1120[1)], but with the following changes to the procedure and to the apparatus (see Figures 1 and 2).

Thermometer: immersion shall be 76 mm and the thermometer shall be calibrated.

Heat source: use either a suitable variac-controlled heating mantle designed to fit the flask, or an electric heater with rheostat heat control.

5.2.2 Preparation of apparatus

Thoroughly clean and dry all glassware before use. Attach the flask to the condenser. When using a heating mantle, place the mantle under the flask and support it with a suitable ring clamp and laboratory-type stand, holding the whole assembly in place by a clamp. When using a rheostat controlled heater, centre a standard porcelain or other suitable refractory having a diameter opening of 32 mm to 38 mm over the heating element of the electric heater and mount the flask on the refractory so that direct heat is applied to the flask only through the opening in the refractory. Place the whole assembly in an area free from draughts or other causes of sudden temperature changes.

---

1) Boiling chips for use with ASTM D 1120 can be obtained from Electro Minerals Co. (US) Inc, PO Box 423, Niagara Falls, NY 14302, USA, or from the Society of Automotive Engineers (SAE), 400 Commonwealth Drive, Warrendale Pa 15096, USA (RM-75).

This information is given for the convenience of users of this International Standard and does not constitute an endorsement by ISO of the product named. Equivalent products may be used if they can be shown to lead to the same results.

Licensed copy: Lee Shau Kee Library, HKUST, Version correct as of 03/01/2015, (c) The British Standards Institution 2013

5.2.3 Test procedure

Turn on the condenser water and apply heat to the flask at such a rate that the fluid is refluxing within (10 ± 2) min at a rate higher than one drop per second. The reflux rate shall not exceed five drops per second. Immediately adjust the heat input to obtain a specified equilibrium reflux rate of one drop per second to two drops per second over the next (5 ± 2) min period. Maintain a timed and constant equilibrium reflux rate of one drop per second to two drops per second for an additional 2 min; record the average value of four temperature readings taken at 30 s intervals at the equilibrium reflux boiling point.

Report the boiling point to the nearest degree Celsius. Duplicate results that agree within 3 °C are acceptable for averages (95 % confidence level).

5.2.4 Repeatability (single analyst)

The standard deviation of results (each the average of duplicates), obtained by the same analyst on different days shall not be greater than 1,3 °C at 34 degrees of freedom. Two such values shall be considered unacceptable (95 % confidence level) if they differ by more than 4 °C.

5.2.5 Reproducibility (multi-laboratory)

The standard deviation of results (each the average of duplicates), obtained by analysts in different laboratories, shall be not greater than 3,5 °C at 15 degrees of freedom. Two such values shall be considered unacceptable (95 % confidence level) if they differ by more than 10,5 °C.

5.2.6 Wet ERBP test

5.2.6.1 Apparatus

5.2.6.1.1 Two corrosion test jars or equivalent screw-top, straight-sided, round glass jars each having a capacity of about 475 ml and approximate inner dimensions of 100 mm height by 75 mm diameter, with matching lids having new, clean inserts providing water-proof and vapour-proof seals[2)].

5.2.6.1.2 Desiccator and cover: bowl-form glass desiccator with 250 mm inside diameter, having a matching tubulated cover fitted with a No. 8 rubber stopper (see Figure 3).

5.2.6.1.3 Desiccator plate of 230 mm diameter, perforated porcelain desiccator plate, without feet, glazed on one side (No.18 or equivalent)[3)].

---

2) Suitable corrosion test jars (RM-49) and tinned steel lids (RM-63) can be obtained from the Society of Automotive Engineers (SAE), 400 Commonwealth Drive, Warrendale, Pa 15096, USA.

3) Desiccator plates (No. 08-641C) can be obtained from Fischer Scientific, Springfield, New Jersey, USA or CeramTec AG (No. 602786), Glaswerk Wertheim KG (No. 911743431) or equivalents, according to DIN/ISO 12911, diameter 235 mm.

This information is given for the convenience of users of this International Standard and does not constitute an endorsement by ISO of the product named. Equivalent products may be used if they can be shown to lead to the same results.

Licensed copy: Lee Shau Kee Library, HKUST, Version correct as of 03/01/2015, (c) The British Standards Institution 2013

Dimensions in millimetres

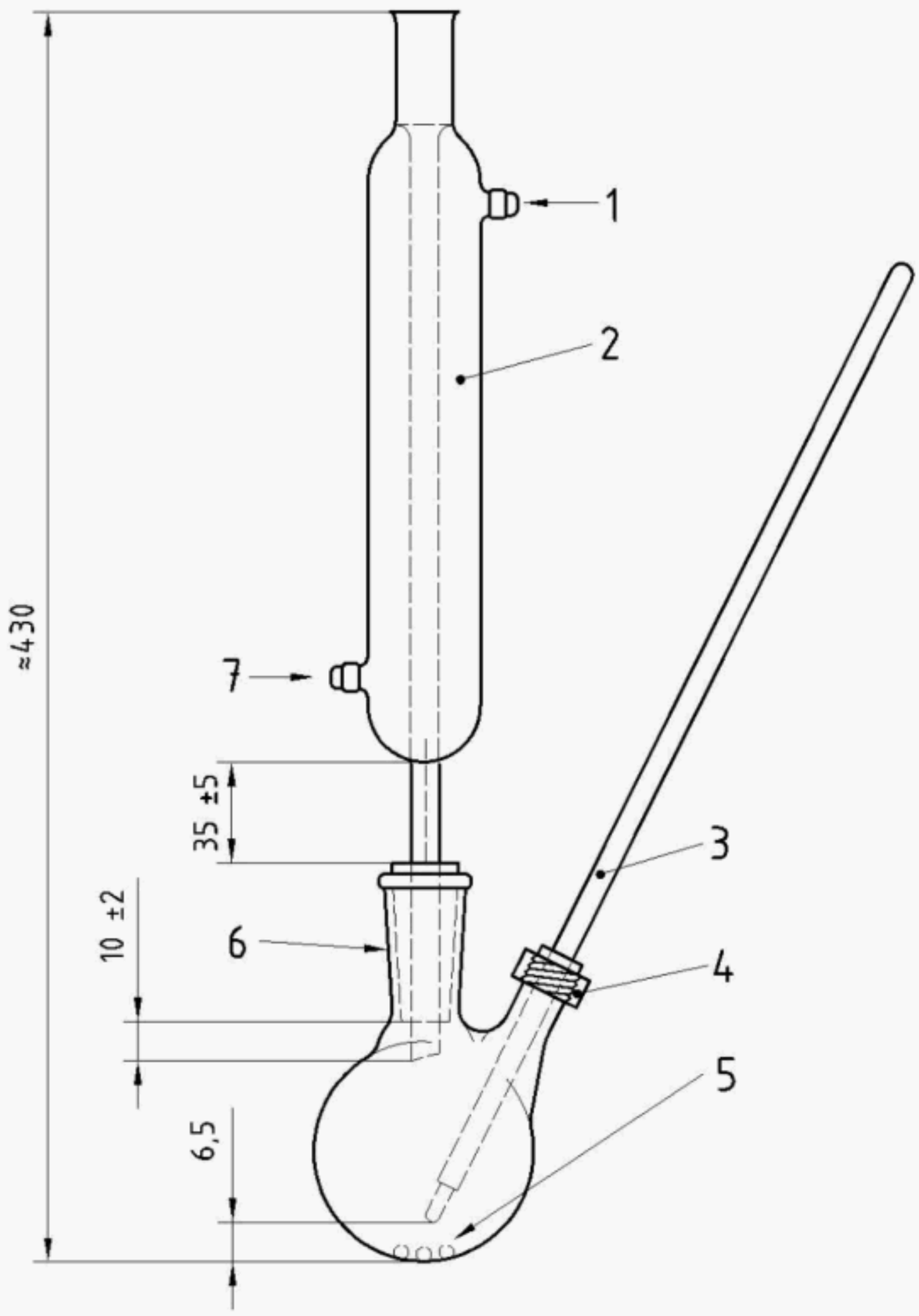

Key

1 water outlet
2 water jacket
3 thermometer
4 plastic screw cap or rubber sleeve
5 boiling chips
6 19/38 joint
7 water inlet

Figure 1 — Boiling point test apparatus

Licensed copy: Lee Shau Kee Library, HKUST, Version correct as of 03/01/2015, (c) The British Standards Institution 2013

Dimensions in millimetres

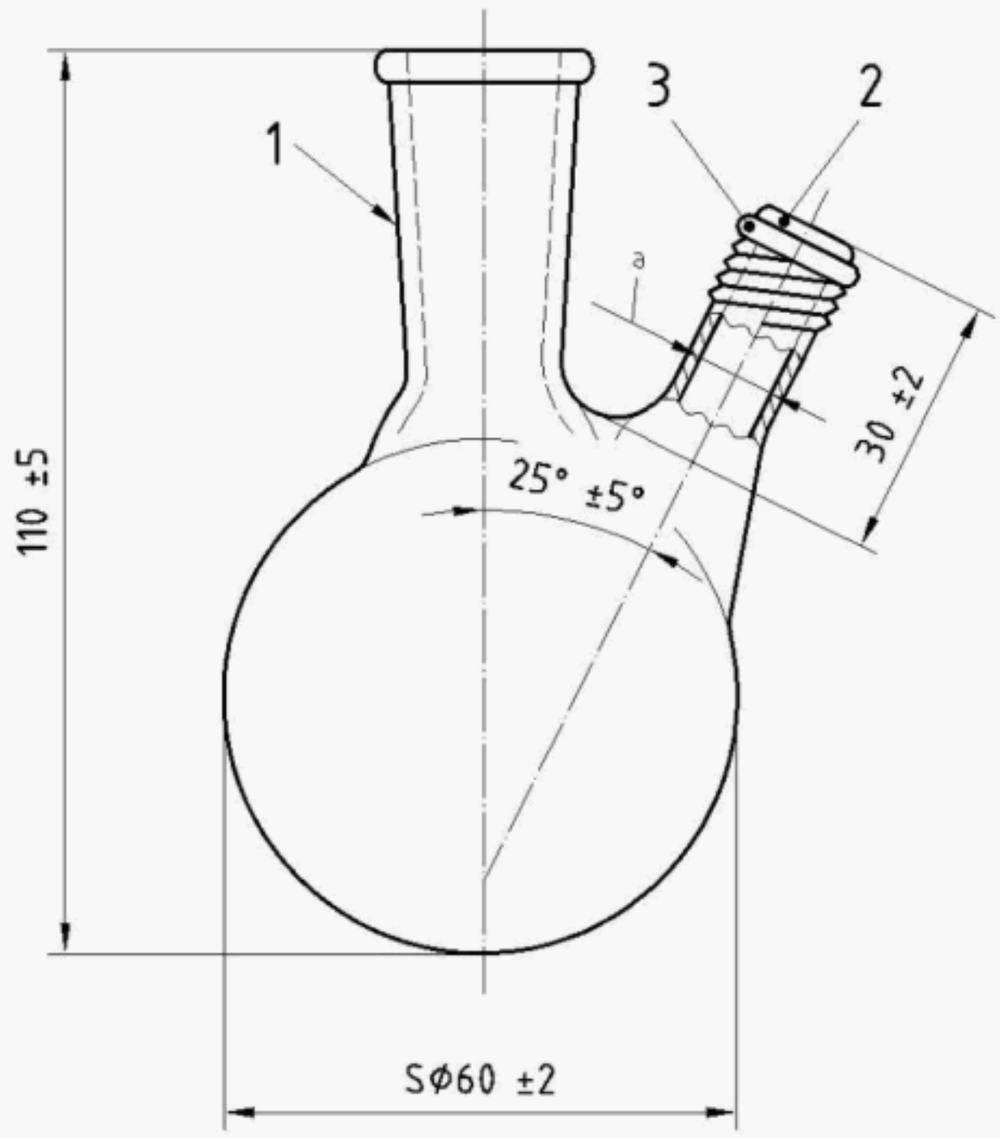

Key

1 19/38 joint

2 fire-polished

3 screw joint or rubber sleeve

a Internal diameter: 8 to 9.

Figure 2 — Detail of 100 ml short-neck flask

5.2.6.2 Test procedure

To determine the wet ERBP of the fluid in duplicate (see Figure 3), first, humidify a 350 ml sample of the fluid under controlled conditions, using 350 ml of triethylene glycol mono methyl ether (TEGME), see Annex E, to establish the end point for humidification.

Lubricate the ground-glass joint of the desiccator.

Then, pour (450 ± 10) ml of distilled water into the desiccator and insert the perforated porcelain plate. Immediately place one open corrosion test jar containing (350 ± 5) ml of the humidified test fluid into the desiccator. Place a second open corrosion test jar containing (350 ± 5) ml of TEGME control fluid into the same desiccator. The water content of the TEGME control fluid at the start of exposure shall be (0,50 ± 0,05) % by weight.

Next, replace the desiccator cover and place immediately in a forced ventilation oven set at (50 ± 1) °C.

Periodically, during oven humidification, remove the rubber stopper from the desiccator and, using a long-needle hypodermic syringe, quickly sample the control fluid and determine its water content in accordance with ASTM D 1123. A maximum of 10 ml of fluid only shall be removed in total. When the water content of the control fluid has reached (3,70 ± 0,05) % by weight, remove the desiccator from the oven and seal the test jar promptly using a screw-cap jar lid. Allow the sealed jar to cool for 60 min to 90 min at (23 ± 5) °C. Determine the ERBP in accordance with clauses 5.2.1 and 5.2.3.

Licensed copy: Lee Shau Kee Library, HKUST, Version correct as of 03/01/2015, (c) The British Standards Institution 2013

Dimensions in millimetres

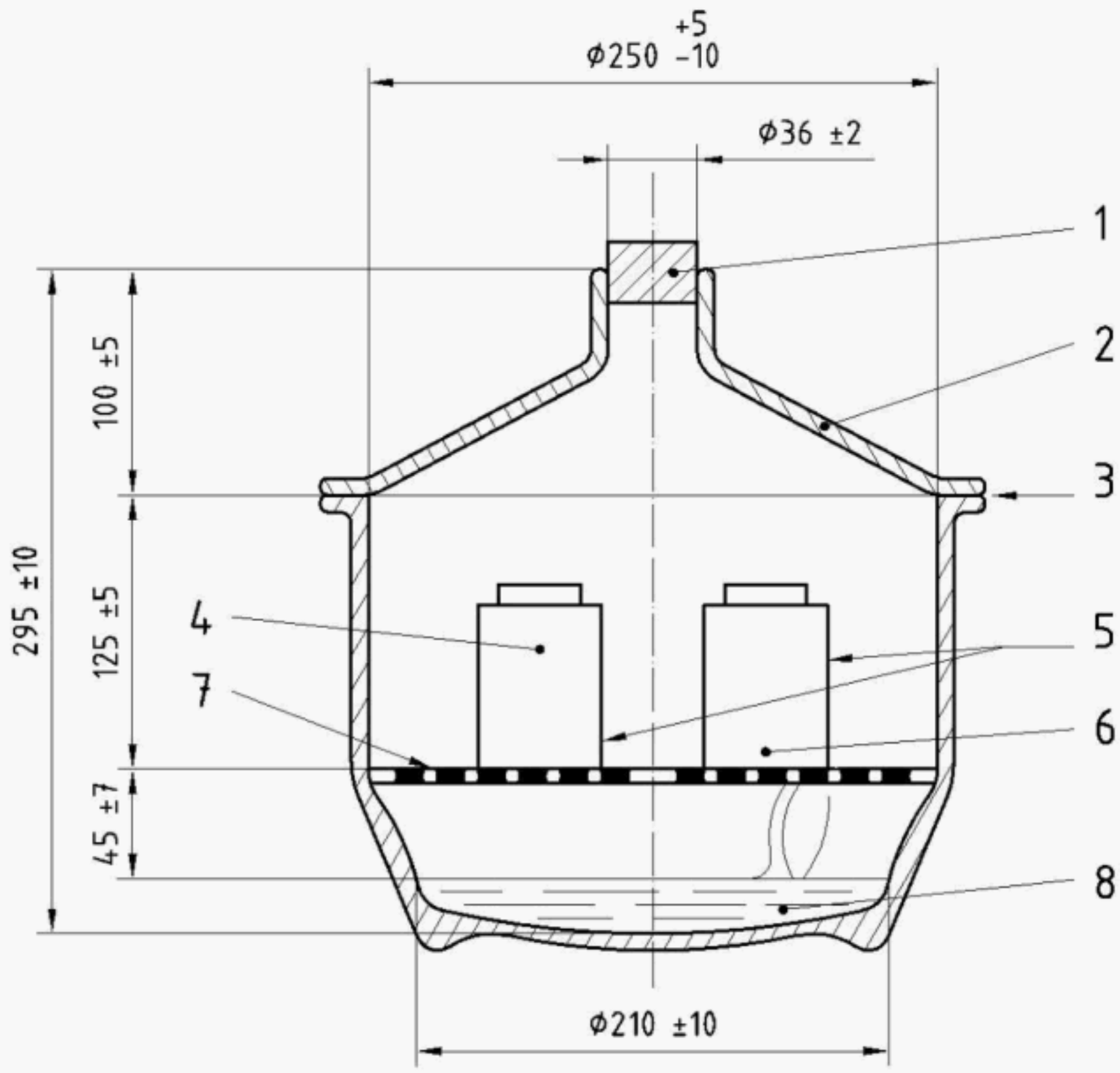

Key

1 rubber stopper
2 glass desiccator with tubulated cover
3 lubricated ground joint
4 TEGME
5 corrosion test jars
6 fluid sample
7 porcelain desiccator plate
8 water

Figure 3 — Humidification apparatus

5.3 pH

Mix the fluid with an equal volume of a 50 %/50 % (V/V) ethanol (laboratory grade) neutralized to a pH of 7,0 ± 0,1. Determine the pH of the resulting solution electrometrically at (23 ± 5) °C, using a pH meter equipped with a calibrated full range (0 to 14) glass electrode and a calomel reference electrode, as specified in ASTM D 664.

Clouding or muddiness of the resulting solution is permitted in the determination.

5.4 Fluid stability

5.4.1 High-temperature stability

To determine the high-temperature stability of the fluid, heat a fresh sample of the original test fluid to a temperature of (185 ± 2) °C according to the procedure specified in 5.2.3 and maintain at that temperature for (120 ± 5) min before determining the boiling point of the fluid, also in accordance with 5.2.3. The difference between this observed boiling point and that previously determined using that test procedure shall be considered as the change in boiling point of the fluid.

Licensed copy: Lee Shau Kee Library, HKUST, Version correct as of 03/01/2015, (c) The British Standards Institution 2013

5.4.2 Chemical stability

To determine the chemical stability of the fluid, first, mix 30 ml of the fluid with 30 ml of the fluid specified in ISO 4926. Determine the ERBP of this fluid mixture by use of the test apparatus specified in 5.2, applying heat to the flask at such a rate that the fluid refluxes within (10 ± 2) min at a rate of between one drop per second and five drops per second.

Record the maximum fluid temperature observed during the first minute after the fluid begins refluxing at a rate higher than one drop per second. Over the next (15 ± 1) min, adjust and maintain the rate of reflux to one drop per second to two drops per second. Maintain a timed and constant equilibrium reflux rate of from one drop per second to two drops per second for an additional 2 min, recording the average value of four temperature readings at 30 s intervals as the final equilibrium reflux boiling point. Chemical reversion is evidenced by the change in temperature between the maximum fluid temperature recorded and the final equilibrium reflux boiling point.

5.5 Corrosion

5.5.1 Metal strip characteristics prior to testing

Prepare two sets of strips from each of the metals listed in Table 1, each strip having a surface area of (25 ± 5) cm^2 (approximately 8 cm long, 1,3 cm wide, and not more than 0,6 cm thick). Drill a hole of between 4 mm and 5 mm in diameter and about 6 mm from one end of each strip. With the exception of the tinned iron strips, clean the strips by abrading them on all surface areas with 320A or P400 waterproof carborundum paper and ethanol (laboratory grade) until all surface scratches, cuts and pits are removed from the strips, using a new piece of carborundum paper for each different type of metal. Wash the strips, including the tinned iron, with ethanol (laboratory grade), then dry them with a clean lint-free cloth and place them in a desiccator containing desiccant maintained at (23 ± 5) °C for at least 1 h. Handle the strips with clean forceps after polishing to avoid fingerprint contamination.

Determine the mass of each strip to the nearest 0,1 mg and assemble each set of strips on an uncoated steel cotter pin or bolt in the following order, so that the strips are in electrical contact: tinned iron, steel, aluminium, cast iron, brass and copper[4)]. Bend the strips, except for the cast iron, so that there is a separation of approximately 10 mm between two adjacent strips at their free ends. Immerse the strip assemblies in ethanol (laboratory grade) to eliminate fingerprints (see Annex C).

5.5.2 Preparation of joints

Measure the base diameter of two standard SBR cups (see Annex A), using an optical comparator or micrometer, to the nearest 0,02 mm, along the centreline of the ISO and rubber type identifications and at right angles to this centreline. Take the measurements at least 0,4 mm and not more than 2,4 mm above the bottom edge and parallel to the base of the cup. Discard any cup if the two measured diameters differ by more than 0,08 mm. Take the average of the measurements on each cup. Determine the hardness of each cup thus supported by the procedure according to ISO 48:1994 (see Annex A). Determine the volume change using the method given in 5.10.

Alternatively, the test may be carried out on rubber anvils prepared from the same material and having the same properties as the cups.

---

4) Zinc has been removed from this list of metals. See Annex C.

Licensed copy: Lee Shau Kee Library, HKUST, Version correct as of 03/01/2015, (c) The British Standards Institution 2013

Place one rubber cup, with lip edge facing up, in each of two straight-sided round glass jars[5)] having a capacity of approximately 475 ml and inner dimensions of approximately 100 mm height and 75 mm diameter. Apply four wrappings of 15 mm PTFE tape around the jar threads allowing 3 mm above the top of the jar. Use only tinned steel lids vented with a hole (0,8 ± 0,1) mm in diameter.

Insert a metal strip assembly inside each cup with the pinned end in contact with the concavity of the cup and the free end extending upward in the jar. Mix 760 ml of the fluid with 40 ml of distilled water.

5.5.3 Test procedure

Add a sufficient amount of the mixture to cover the metal strip assembly in each jar to a depth of approximately 10 mm above the tops of the strips. Tighten the lids and place the jars in an oven maintained at (100 ± 2) °C for (120 ± 2) h then allow the jars to cool at (23 ± 5) °C for 60 min to 90 min. Immediately following the cooling period, remove the metal strips from the jars by use of forceps, removing loose adhering sediment by agitation of the metal strip assembly in the fluid in the jar. Examine the test strips and test jars for adhering crystalline deposit. Disassemble the metal strips, remove adhering fluid by flushing with water and clean individual strips by wiping with a cloth for evidence of deterioration. Place the strips in a desiccator containing a desiccant maintained at (23 ± 5) °C for at least 1 h.

Determine the mass of each strip to the nearest 0,1 mg. Determine the difference in mass of each metal strip and divide the difference by the total surface area of the metal strip measured in square centimetres. Average the measured values of the duplicates. In the event of a marginal pass on inspection, or of a failure in only one of the duplicates, another set of duplicate test samples shall be run. Both repeat samples shall meet all the requirements of Table 1.

Immediately following the cooling period, remove the rubber cups from the jars by use of forceps, removing loose adhering sediment by agitation of the cup in the fluid in the jar. Rinse the cups in ethanol (laboratory grade) and dry them in air. Examine the cups for evidence of sloughing, blisters, and other forms of disintegration. Measure the base diameter, hardness and volume of each cup within 15 min after removal from the fluid and calculate the changes according to 5.10.

Examine the fluid/water mixture in the jars for presence of gel. Agitate the fluid in the jars to suspend and uniformly disperse sediment and transfer a 100 ml portion of this fluid to a cone-shaped centrifuge tube. Determine the percentage sediment in accordance with ASTM D 91. Measure the pH of the corrosion test fluid in accordance with 5.3.

5.6 Fluidity and appearance at low temperatures

5.6.1 At − 40 °C for 144 h

Place 100 ml of fluid in a glass sample bottle[6)] having a capacity of approximately 125 ml, an outside diameter of (37 ± 0,5) mm and an overall height of (165 ± 2,5) mm. Stopper the bottle with a cork and place in a cold bath maintained at (− 40 ± 2) °C for (144 ± 4) h.

---

5) Suitable jars (RM-49) and lids (RM-64) are available from Society of Automotive Engineers (SAE), 400 Commonwealth Drive, Warendale, Pa 15096, USA.

This information is given for the convenience of users of this International Standard and does not constitute an endorsement by ISO of the product named. Equivalent products may be used if they can be shown to lead to the same results.

6) Sample bottles (RM-59A) may be obtained from the Society of Automotive Engineers (SAE), 400 Commonwealth Drive, Warrendale, Pa 15096, USA.

This information is given for the convenience of users of this International Standard and does not constitute an endorsement by ISO of the product named. Equivalent products may be used if they can be shown to lead to the same results.

Licensed copy: Lee Shau Kee Library, HKUST, Version correct as of 03/01/2015, (c) The British Standards Institution 2013

Examine the fluid for evidence of stratification and sedimentation. Invert the bottle and determine the number of seconds required for the air bubble to travel to the top of the fluid.

5.6.2 At − 50 °C for 6 h

Repeat the procedure and observations according to 5.6.1 but maintain the cold bath at (− 50 ± 2) °C for (6 ± 0,2) h.

5.7 Water tolerance

5.7.1 At − 40 °C for 22 h

Mix 3,5 ml of distilled water with 100 ml of fluid and pour the mixture into a cone-shaped centrifuge tube. Stopper the tube with a cork and place in a cold bath maintained at (− 40 ± 2) °C for (22 ± 2) h.

Examine the fluid for evidence of stratification and sedimentation. Invert the tube and determine the number of seconds required for the air bubble to travel to the top of the fluid. The air bubble shall be considered to have reached the top of the fluid when the top of the bubble reaches the 2 ml graduation of the centrifuge tube.

5.7.2 At 60 °C for 22 h

Place the centrifuge tube from 5.7.1 in an oven maintained at (60 ± 2) °C for (22 ± 2) h. Remove the tube from the oven and immediately examine the contents for evidence of stratification. Determine the percentage sediment by volume in accordance with ASTM D 91.

5.8 Compatibility/miscibility with ISO 4926 fluid

5.8.1 At − 40 °C for 22 h

Mix 50 ml of fluid with 50 ml of the fluid as specified in ISO 4926 and pour this mixture into a cone-shaped centrifuge tube and stopper with a cork. Place the centrifuge tube for (22 ± 2) h in a bath maintained at (− 40 ± 2) °C. Examine the fluid for stratification and sedimentation.

5.8.2 At 60 °C for 22 h

Place the centrifuge tube specified in 5.8.1 in an oven maintained at (60 ± 2) °C for (22 ± 2) h. Remove the tube from the oven and immediately examine the contents for evidence of stratification. Determine the percentage sediment by volume in accordance with ASTM D 91.

5.9 Resistance to oxidation

Prepare two sets of aluminium and cast iron test strips using the procedure given in 5.5. Determine the mass of each strip to the nearest 0,1 mg and assemble a strip of each metal on an uncoated steel cotter pin or bolt, separating the strips at each end with a piece of tinfoil [7)] (99,9 % tin, 0,025 % lead, max.) approximately 12 mm square and between 0,02 mm and 0,06 mm in thickness.

---

7) Tinfoil (RM-27) may be obtained from the Society of Automotive Engineers (SAE), 400 Commonwealth Drive, Warrendale, Pa 15096, USA

This information is given for the convenience of users of this International Standard and does not constitute an endorsement by ISO of the product named. Equivalent products may be used if they can be shown to lead to the same results.

Licensed copy: Lee Shau Kee Library, HKUST, Version correct as of 03/01/2015, (c) The British Standards Institution 2013

Place (30 ± 1) ml of fluid in a small glass bottle approximately 120 ml in capacity. Add (60 ± 2) mg of reagent grade benzoyl peroxide and (1,5 ± 0,05) ml of distilled water to the bottle. Benzoyl peroxide that has more than 90 % purity (excluding water) when tested according to ASTM E 298 shall be used; brownish or dusty product shall be discarded. Stopper the bottle and shake the contents, avoiding contact of the solution with the stopper. Place the bottle in an oven at (70 ± 2) °C for (120 ± 10) min, shaking every 15 min to effect solution of the peroxide. Remove the bottle from the oven, do not disturb the stopper, and cool in air at a temperature of (23 ± 5) °C for 2 h.

Place approximately 1/8 section of a standard SBR cup, as described in Annex A, in the bottom of each of two test tubes about 22 mm in diameter and 175 mm in length. Add 10 ml of prepared test fluid to each test tube. Place a metal strip assembly in each tube with the end of the strips resting on the rubber, the solution covering about one half of the length of the strips, and the end having the cotter pin remaining out of the solution. Stopper the tubes with corks and store upright for (70 ± 2) h at (23 ± 5) °C. Loosen the stoppers and place the tubes for (168 ± 2) h in an oven maintained at (70 ± 2) °C.

After the heating period, remove and disassemble the metal strips and examine for gum deposits. Wipe the strips with a cloth saturated with ethanol (laboratory grade) and examine for pitting or roughening of the surface. Place the strips in a desiccator containing a desiccant maintained at (23 ± 5) °C for at least 1 h. Determine the mass of each strip to the nearest 0,1 mg.

Determine the mass change by dividing the difference in mass of each metal strip by the total surface area of each metal strip measured in square centimetres. Average the measured values of the duplicates. In the event of a marginal pass on inspection, or of a failure in only one of the duplicates, another set of duplicate test samples shall be run. Both repeat samples shall meet all the requirements of Table 1.

5.10 Effect on rubber

5.10.1 General

For the test procedure according to 5.10.2.1 use standard SBR cups (see Annex A) and for that according to 5.10.2.2, use standard EPDM slabstock. Measure the base diameter and hardness of all cups in accordance with 5.5, discarding any cup whose diameter differs by more than 0,08 mm.

Determine the mass of the cups in air (m_1) to the nearest 1 mg and then determine the apparent mass of the cup immersed in distilled water at (23 ± 5) °C (m_2). Quickly dip each specimen in ethanol (laboratory grade) and then air dry or blot dry with filter paper free of lint and foreign material.

5.10.2 Test procedures

5.10.2.1 At 120 °C — SBR cups

Place two SBR cups in a straight-sided round glass jar[8)] having a capacity of approximately 250 ml and inner dimensions of approximately 125 mm height and 50 mm diameter, and a tinned steel lid.

Add 75 ml of fluid to the jar and heat for (70 ± 2) h at (120 ± 2) °C. Allow the jar to cool at (23 ± 5) °C for 60 min to 90 min. Remove the cups from the jar, wash quickly with ethanol (laboratory grade) and dry in air. Examine the cups for disintegration as evidenced by blisters or sloughing.

---

8) Suitable test jars (RM-51) and tinned steel lids (RM-52a) may be obtained from the Society of Automotive Engineers (SAE), 400 Commonwealth Drive, Warrendale, Pa 15096,USA.

This information is given for the convenience of users of this International Standard and does not constitute an endorsement by ISO of the product named. Equivalent products may be used if they can be shown to lead to the same results.

Licensed copy: Lee Shau Kee Library, HKUST, Version correct as of 03/01/2015, (c) The British Standards Institution 2013

After removal from the alcohol and drying, place each cup in a separate, tared, stoppered weighing bottle and determine the mass (m_3). Remove each cup from its weighing bottle and determine the apparent mass immersed in distilled water (m_4) to determine water displacement after hot fluid immersion. Measure the base diameter and hardness of each cup within 15 min after removal from the fluid.

Calculate the volume change, ΔV, as a percentage of the original volume, as follows:

$$\Delta V = \frac{(m_3 - m_4) - (m_1 - m_2)}{(m_1 - m_2)} \times 100$$

where

m_1 is the initial mass, in grams, in air;

m_2 is the apparent initial mass, in grams, in water;

m_3 is the mass, in grams, in air after immersion in test fluid;

m_4 is the apparent mass, in grams, in water after immersion in test fluid.

5.10.2.2 At 120 °C — Standard EPDM slabstock

Place two 25 mm × 25 mm standard test specimens in a straight-sided round glass jar having a capacity of approximately 250 ml and inner dimensions of approximately 125 mm in height and 50 mm in diameter and a tinned steel lid. Add 75 ml of fluid to the jar and heat for (70 ± 2) h at (120 ± 2) °C before allowing the jar to cool to (23 ± 5) °C for 60 min to 90 min. Remove the specimens from the jar, wash quickly with ethanol (laboratory grade) and air dry. Examine the specimens for disintegration as evidenced by blisters or sloughing. Determine the volume change in accordance with 5.10.2.1 and measure the hardness of each specimen.

5.10.3 Repeatability (single analyst)

The standard deviation of results (each the average of duplicate determinations) obtained by the same analyst on different days shall not be greater than 0,05 mm at 46 degrees of freedom. Two such values shall be considered unacceptable if they differ by more than 0,13 mm (95 % confidence level).

5.10.4 Reproducibility (multi-laboratory)

The standard deviation of results (each the average of duplicates) obtained by analysts in different laboratories shall not be greater than 0,08 mm at 7 degrees of freedom. Two such values shall be considered unacceptable if they differ by more than 0,20 mm (95 % confidence level).

Licensed copy: Lee Shau Kee Library, HKUST, Version correct as of 03/01/2015, (c) The British Standards Institution 2013

Annex A

(normative)

ISO styrene-butadiene rubber (SBR) brake cups for testing brake fluid

A.1 Composition

This shall be in accordance with Table A.1.

Table A.1 — Composition of SBR brake cups

Ingredient	Parts by mass
SBR type 1503[a]	100
Oil furnace black (NBS 378)	40
Zinc oxide (NBS 370)	5
Sulphur (NBS 371)	0,25
Stearic acid (NBS 372)	1
n-Tertiary butyl-2-benzothiazole sulphebnamide (NBS 384)	1
Symmetrical-dibetanaphthyl-p phenylenediamine	1,5
Dicumyl peroxide (40 % on precipitated $CaCO_3$)[b]	4,5
Total	153,25
Ingredients labelled (NBS …) shall have properties technically equivalent to those supplied by the US National Bureau of Standards.	
a Philprene 1503[9)] has been found suitable.	
b Use only within 90 days of manufacture and store at a temperature below 27 °C.	

A.2 Procedure for mixing rubber compound

The rubber compound shall be mixed in accordance with ASTM D 3185 for formula 2B.

9) Philprene 1503 is an example of a suitable product available commercially. This information is given for the convenience of users of this International Standard and does not constitute an endorsement by ISO of this product.

Licensed copy: Lee Shau Kee Library, HKUST, Version correct as of 03/01/2015, (c) The British Standards Institution 2013

A.3 Properties of the rubber compound

Vulcanizates cured for 12 min at 180 °C by the procedure according to ASTM D 3185 shall be in accordance with Table A.2.

Table A.2 — Properties of rubber compound

Property	Requirements	Method according to
Hardness	63 ± 3	ISO 48
Tensile strength	17,5 MPa, min.	ISO 37
Ultimate elongation	350 %, min.	ISO 37
Tensile strength after 70 h at 125 °C	30 % decrease, max.	ASTM D 865
Ultimate elongation after 70 h at 125 °C	50 % decrease, max.	ASTM D 865
Hardness after 70 h at 125 °C	0 to 10 increase	ISO 48
Compression set after 22 h at 125 °C	15 to 20 %	ISO 815
Brittleness temperature	− 40 °C, max.	ISO 812

A.4 Brake cups prepared from rubber compound

Brake cups shall be prepared from the rubber compound by vulcanization under the conditions required to obtain the properties given in A.3. The dimensions of the cups shall be suitable for the brake cylinders used to determine simulated service performance. The cups shall be used in testing brake fluids either within 6 months from the date of manufacture when stored at room temperatures below 30 °C or within 36 months from the date of manufacture when stored at temperatures below − 15 °C. After removal of cups from storage, they shall be conditioned base down on a flat surface for at least 12 h at room temperature in order to allow them to reach their true configuration before measurement.

Standard brake cups conforming to this International Standard can be obtained from[10)]

Society of Automotive Engineers (SAE), 400 Commonwealth Drive, Warrendale, Pa. 15096, USA, or

Laboratoire de recherches et de contrôle du caoutchouc, 12, rue Carvès, 92120 Montrouge, France.

See Figure A.1.

For testing hardness, rubber anvils prepared from the same material and having a hardness in the same range (± 5 IRHD) as the seal being tested may be used. See Figure A.2.

10) This information is given for the convenience of users of this International Standard and does not constitute an endorsement by ISO of the product named. Equivalent products may be used if they can be shown to lead to the same results.

Licensed copy: Lee Shau Kee Library, HKUST, Version correct as of 03/01/2015, (c) The British Standards Institution 2013

Dimensions in millimetres

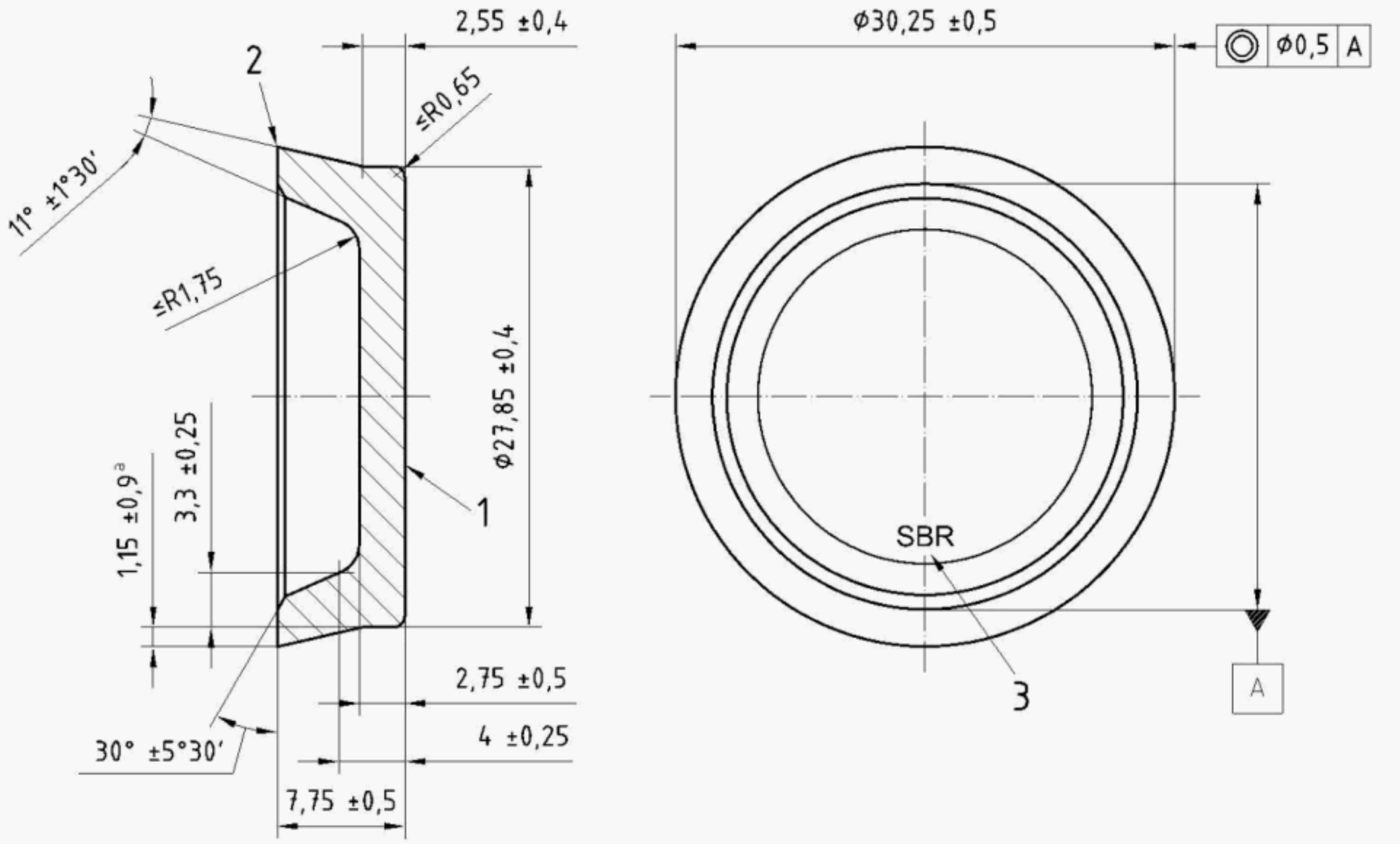

Smooth finish all over cup, to be free of foreign substances and moulding imperfections.

Key

1 base to be flat or concave not over 0,15

2 all flash must be removed from edge of cup. Sharp corner desired

3 mould identification/Mould cavity number: height of letters and numbers ≈ 0,4

Figure A.1 — Test brake cup for wheel cylinder

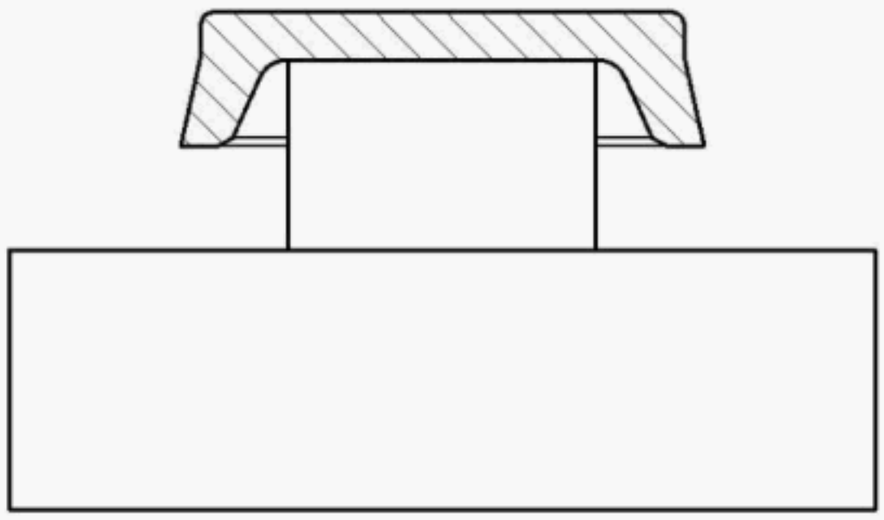

Single lip seal.

Material for anvils: rubber having hardness in same range (± 5 IRHD) as the seal being tested.

Figure A.2 — Anvil for measuring hardness

Licensed copy: Lee Shau Kee Library, HKUST, Version correct as of 03/01/2015, (c) The British Standards Institution 2013

Annex B

(normative)

Corrosion test strips

Table B.1

Corrosion test strip	Material specification	General material date	Dimensions	Thickness	Surface requirements
Tinned iron	ASTM A-624 Fed. Spec. QQ-T- 425 A	Tinplate, electrolytic bright sr type MR. T-3 No. 28 85 lb		As purchased	As sheared. Clean and uniform tinning
Steel	SAE 1018	Low carbon sheet, cold-rolled, hardness: 40 to 72 HB		≈ 0,2 cm	Edges machined to remove shearing marks. Clean uniform surfaces
Aluminium	SAE AA 2024	Wrought aluminium alloy, temper T 3, hardness: 75 HB typical		≈ 0,2 cm	Edges machined to remove shearing marks. Clean uniform surfaces
Cast iron	SAE G 3000	Soft automotive cast iron. Shall be free from shrinkage cavities, porosity or any other defects detrimental to specification use of the material. Hardness: 86 to 98 HB	Length ≈ 8 cm Width ≈ 1,3 cm Surfaces area = (25 ± 5) cm^2	≈ 0,4 cm	Surface grind sides to dimension using a well dressed No. 80 alundum wheel. Clean uniform surfaces
Brass	SAE CA 260	Wrought alloy-yellow brass rolled sheet or strip, half hard temper, hardness: 57 to 74 HB		≈ 0,2 cm	Edges machined to remove shearing marks. Clean uniform surfaces
Copper	SAE CA 114	Cold-rolled copper sheet or strip, half hard temper, hardness: 35 to 56 HB		≈ 0,2 cm	Edges machined to remove shearing marks. Clean uniform surfaces

Drill hole between 4 mm and 5 mm in diameter and approx. 6 mm from one end of each strip. Holes shall be clean and free from burrs.

Hardness ranges are commercial for the designated metals. Hardness is not specified for the tinned iron because it is not considered a practical requirement.

Test strips can be obtained from the Society Automotive Engineers (SAE), 400 Commonwealth Drive, Warrendale, Pa. 15096, USA, or *Laboratoire de Recherches et de contrôle du caoutchouc*, 12 rue Carvès, 92120 Montrouge, France[11].

11) This information is given for the convenience of users of this International Standard and does not constitute an endorsement by ISO of the product named. Equivalent products may be used if they can be shown to lead to the same results.

Licensed copy: Lee Shau Kee Library, HKUST, Version correct as of 03/01/2015, (c) The British Standards Institution 2013

Annex C
(normative)

Corrosion strip assembly

Dimensions in millimetres

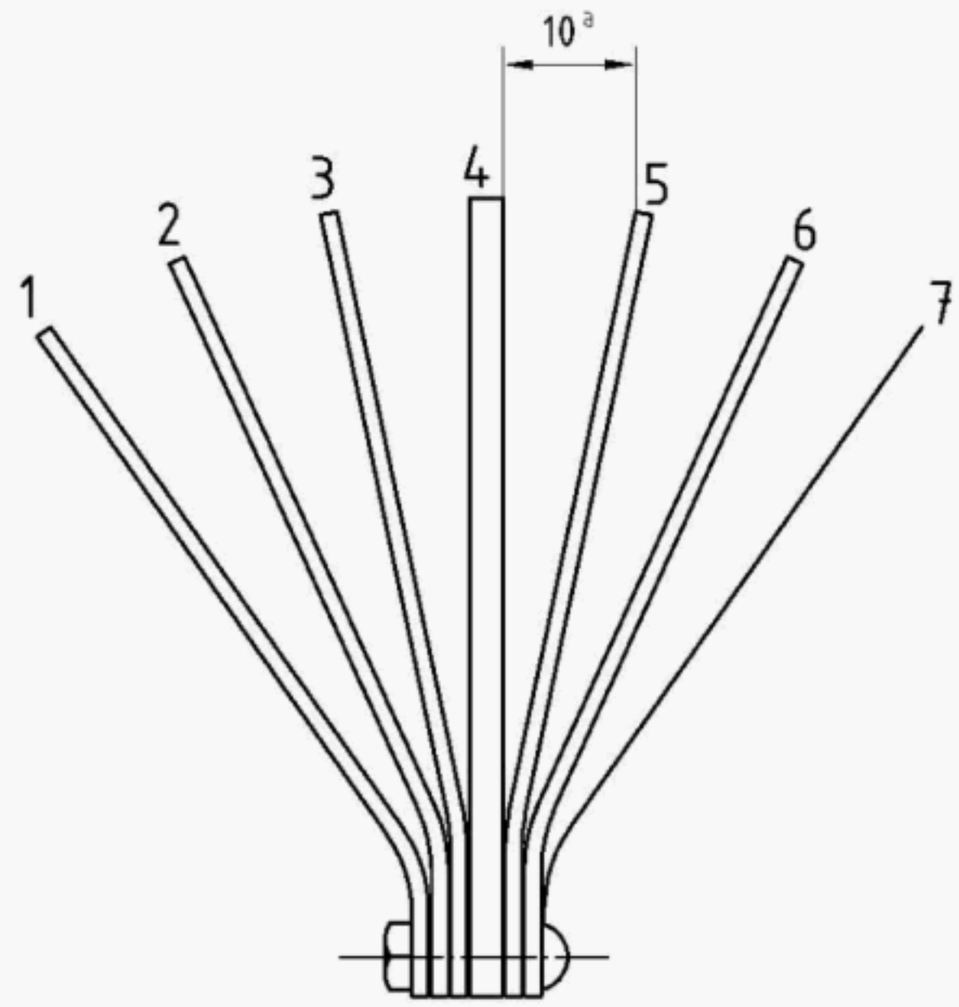

Key

1 zinc [b]
2 copper
3 brass
4 cast iron
5 aluminium
6 steel
7 tinned iron

a Typical spacing between strips.

b The zinc strip is temporarily unavailable for use with this International Standard, but it is intended that it be reintroduced.

Figure C.1 — Corrosion strip assembly

Licensed copy: Lee Shau Kee Library, HKUST, Version correct as of 03/01/2015, (c) The British Standards Institution 2013

Annex D

(normative)

Standard ethylene, propylene and diene (EPDM) terpolymer rubber slabstock

D.1 Formulation of rubber compound

This shall be in accordance with Table D.1.

Table D.1 — Formulation of rubber compound

Ingredient	Parts by weight
EPDM type (Nordel 1320)[a]	100
Zinc oxide (NBS 370)	5
Oil furnace black (NBS 378)	43
Polymerized 1.2-dihydro-2.2.4-trimethylquinoline	2
Dicumyl peroxide (40 % on precipitated $CaCO_3$)[b]	10
Total	160
Ingredients labelled (NBS …) shall have properties technically equivalent to those supplied by the US National Bureau of Standards.	
a Nordel EPDM 1320 is the trade name of a product supplied by DuPont. This information is given for the convenience of users of this International Standard and does not constitute an endorsement by ISO of the product named. Equivalent products may be used if they can be shown to lead to the same results.	
b Use only within 90 days of manufacture and store at a temperature below 27 °C	

D.2 Procedure for mixing rubber compound

The rubber compound shall be mixed in accordance with ASTM D 3182.

D.3 Properties of rubber compound

Vulcanizates cured for 25 min at 175 °C by the procedure described in ASTM D 3182 shall be in accordance with Table D.2.

Licensed copy: Lee Shau Kee Library, HKUST, Version correct as of 03/01/2015, (c) The British Standards Institution 2013

Table D.2 — Properties of rubber compound

Property	Requirement	ASTM method
Hardness, IRHD	70 ± 3	D 1415
Tensile strength, min.	13,8 MPa	D 412
Ultimate elongation, min.	225 %	D 412
Tensile strength, decrease after 22 h at 175 °C, max.	15 %	D 865
Ultimate elongation, decrease after 22 h at 175 °C, max.	—	—
Hardness, increase after 22 h at 175 °C	0 to 10	D 865
Compression set after 22 h at 175 °C	20 % max.	D 395 (Method B)
Brittleness temperature, max.	—	D 746

D.4 Slabstock prepared from rubber compound

Test slabs of approximately 150 mm × 150 mm × 1,9 mm shall be prepared from the rubber compound by vulcanization under the conditions stated in D.3. These slabs may be used in testing brake fluids within 36 months from their date of manufacture, when stored in the dark at ambient temperatures not exceeding 38 °C adequately protected from atmospheric or other contaminants.

When stored at other than (23 ± 5) °C, the material shall be allowed to stabilized at laboratory temperature prior to measurements.

Licensed copy: Lee Shau Kee Library, HKUST, Version correct as of 03/01/2015, (c) The British Standards Institution 2013

Annex E
(normative)

Triethylene glycol monomethyl ether (TEGME) brake fluid grade

E.1 Properties of TEGME

See Table E.1.

Table E.1 — Properties of TEGME

Property	Requirement	Method
Assay	94 area %, min. Further, neither the material preceding nor that following TEGME through the column shall exceed 4 area %	Gas chromatographic
Water content	0,3 % by weight, min.	ASTM D 1364
Acidity	0,02 % by weight, min.	ASTM D 1613
Suspended matter	Substantially free	—
Appearance	Clear liquid 100 APHA max.	ASTM D 1209
ERBP	240 °C min.	SAE J1703

E.2 Gas chromatographic analysis

E.2.1 General

Analyse a representative sample using a dual-column programmed-temperature gas chromatograph, with a thermal conductivity detector and two 3 048 mm × 12,7 mm, type 304 stainless steel columns packed with 10 % Carbowax[12] 20M-terephthalic acid on Chromosorb[13] T. 40-60 mesh as follows.

E.2.2 Column preparation

Prepare the column according to the following procedure.

a) Use pre-cleaned tubing or take two 3 048 mm lengths of 12,7 mm, type 304 stainless steel tubing (0,51 mm wall thickness) and clean as follows.

---

12) Carbowax is the trade name of a product supplied by Dow. This information is given for the convenience of users of this International Standard and does not constitute an endorsement by ISO of the product named. Equivalent products may be used if they can be shown to lead to the same results.

13) Chromosorb is the trade name of a product supplied by Johns-Manville. This information is given for the convenience of users of this International Standard and does not constitute an endorsement by ISO of the product named. Equivalent products may be used if they can be shown to lead to the same results.

Licensed copy: Lee Shau Kee Library, HKUST, Version correct as of 03/01/2015, (c) The British Standards Institution 2013

DANGER — Nitric acid causes severe burns if it comes in contact with any part of the body.

1) Rinse the tubing with 30 ml of concentrated nitric acid.

2) Drain and rinse the tubing with distilled water.

3) Drain and rinse with acetone.

4) Dry with nitrogen.

b) Weigh 5 g of Carbowax[12)] 20M terephthalic acid into a 400 ml beaker. Add 200 ml of methylene chloride and stir with a magnetic stirrer until dissolved. Approximately 30 min will be required.

c) Weigh 45 g of Chromosorb[13)] T. 40-60 mesh into a tarred breaker and transfer to a 500 ml rotary evaporating flask.

d) Add the Carbowax 20M-TPA solution to the flash and mix by gently swirling. If necessary, add additional methylene chloride to form a wet slurry.

e) Allow the slurry to stand for 10 min.

f) Attach the flask to a rotary evaporator and apply vacuum slowly while degassing. Set the pressure at approximately 100 mmHg. Use dry ice-acetone traps to protect the vacuum source.

g) Rotate the flask at 10 r/min.

h) Protect the contents of the flask from extreme cold or heat by means of a hot air gun (hair dryer at a temperature between 50 °C to 60 °C).

i) When all of the solvent has been removed, stop the evaporator and allow the contents of the flask to return to room temperature. If a rotary evaporator is not available, satisfactory packing may be prepared using the evaporating dish technique.

j) Transfer the dried packing to a bottle having a volume about twice the volume of the packing.

k) Add 0,5 % by weight of powdered graphite and mix thoroughly until the mixture flows freely.

l) Sieve the mixture using a combination of 30-mesh and 60-mesh screens. Retain the portion that passes through the 30-mesh and is retained on the 60-mesh screen.

m) Using a funnel, pack the columns with approximately 7 g of packing by gently tapping the side of the column with a suitable metal rod. Do not add large quantities of packing to the funnel at one time.

n) Condition the columns by programming from ambient temperature to 200 °C at 2 °C/min and hold at 200 °C for at least 4 h. Repeatedly inject a sample until a good baseline is obtained.

Licensed copy: Lee Shau Kee Library, HKUST, Version correct as of 03/01/2015, (c) The British Standards Institution 2013

E.2.3 Operating parameters

Recorder:	1 mV
Chart speed:	12,7 mm/min
Temperatures column:	150 °C to 225 °C, programmed at 6 °C/min — hold at 225 °C for 30 min
Detector:	260 °C
Injection port:	230 °C
Carrier gas:	Helium at 20 cm^3/min
Sample size:	1 cm^3 Total elution
time:	45 min

E.2.4 Procedure

Inject the sample into the chromatograph and obtain the chromatogram using the parameters according to E1.2.

Measure the areas of all component peaks using an electronic integrator or a planimeter.

Calculate and report the area percent, A_{perc}, of methoxytriglycol, using the following equation. The methoxytriglycol elutes at about 15 min.

$$A_{perc} = \frac{A \times T \times 100}{D}$$

where

A is the peak area for methoxytriglycol;

D is the total area, the sum of all areas corrected for attenuation;

T is the attenuation for component peak.

Licensed copy: Lee Shau Kee Library, HKUST, Version correct as of 03/01/2015, (c) The British Standards Institution 2013

Bibliography

[1] ISO 1817:1985, *Rubber, vulcanized — Determination of the effect of liquids*

[2] FMVSS 116, *Motor Vehicle Brake Fluids*

[3] ASTM E 260-73, *Standard recommended Practice for General Gas Chromatography Procedures*

Licensed copy: Lee Shau Kee Library, HKUST, Version correct as of 03/01/2015, (c) The British Standards Institution 2013

BSI — British Standards Institution

BSI is the independent national body responsible for preparing British Standards. It presents the UK view on standards in Europe and at the international level. It is incorporated by Royal Charter.

Revisions

British Standards are updated by amendment or revision. Users of British Standards should make sure that they possess the latest amendments or editions.

It is the constant aim of BSI to improve the quality of our products and services. We would be grateful if anyone finding an inaccuracy or ambiguity while using this British Standard would inform the Secretary of the technical committee responsible, the identity of which can be found on the inside front cover. Tel: +44 (0)20 8996 9000. Fax: +44 (0)20 8996 7400.

BSI offers members an individual updating service called PLUS which ensures that subscribers automatically receive the latest editions of standards.

Buying standards

Orders for all BSI, international and foreign standards publications should be addressed to Customer Services. Tel: +44 (0)20 8996 9001.
Fax: +44 (0)20 8996 7001. Email: orders@bsi-global.com. Standards are also available from the BSI website at http://www.bsi-global.com.

In response to orders for international standards, it is BSI policy to supply the BSI implementation of those that have been published as British Standards, unless otherwise requested.

Information on standards

BSI provides a wide range of information on national, European and international standards through its Library and its Technical Help to Exporters Service. Various BSI electronic information services are also available which give details on all its products and services. Contact the Information Centre. Tel: +44 (0)20 8996 7111. Fax: +44 (0)20 8996 7048. Email: info@bsi-global.com.

Subscribing members of BSI are kept up to date with standards developments and receive substantial discounts on the purchase price of standards. For details of these and other benefits contact Membership Administration. Tel: +44 (0)20 8996 7002. Fax: +44 (0)20 8996 7001.
Email: membership@bsi-global.com.

Information regarding online access to British Standards via British Standards Online can be found at http://www.bsi-global.com/bsonline.

Further information about BSI is available on the BSI website at http://www.bsi-global.com.

Copyright

Copyright subsists in all BSI publications. BSI also holds the copyright, in the UK, of the publications of the international standardization bodies. Except as permitted under the Copyright, Designs and Patents Act 1988 no extract may be reproduced, stored in a retrieval system or transmitted in any form or by any means – electronic, photocopying, recording or otherwise – without prior written permission from BSI.

This does not preclude the free use, in the course of implementing the standard, of necessary details such as symbols, and size, type or grade designations. If these details are to be used for any other purpose than implementation then the prior written permission of BSI must be obtained.

Details and advice can be obtained from the Copyright & Licensing Manager. Tel: +44 (0)20 8996 7070. Fax: +44 (0)20 8996 7553.
Email: copyright@bsi-global.com.

BSI
389 Chiswick High Road
London
W4 4AL